APPLICATION NO:
F/2000/1120

LOCATION:
3 Comfrey Close, Wokingham.

APPLICANT:
Mr & Mrs Anderson C/O Excel Design Ltd

PROPOSAL:
Proposed single storey front extension to dwelling.

EARLIEST DATE FOR DECISION: **07/05/2000**
28 day Member exp: 11/05/2000.
APPLICATION EXPIRY DATE: **25/05/2000**

CASE OFFICER: **Natalie Brown**

WOKINGHAM DISTRICT COUNCIL

TOWN AND COUNTRY PLANNING ACTS

Notification of Approval of Permission

Mr & Mrs Anderson
C/O Excel Design Ltd
17 Gorse Ride South
Finchampstead
Berkshire
RG40 4EH

Application Number: F/2000/1120

Parish: **WOKINGHAM**

Location: **3, Comfrey Close, Wokingham.**

Proposal: **Proposed single storey front extension to dwelling.**

The Wokingham District Council in pursuance of their powers under the above Acts and Regulations hereby **Approve Permission** for carrying out the above development in accordance with the application and the accompanying plans submitted to the Council subject to compliance with the following conditions, the reasons for which are specified hereunder.

Condition
1. The development hereby permitted shall be begun before the expiration of five years from the date of this permission.

Condition
2. All new external work shall be carried out in materials that resemble in size, colour and texture, those of the existing building.

Reason
1. In pursuance of Section 91(1) of the Town and Country Planning Act 1990.

Reason
2. To ensure a satisfactory external appearance.

John Mitchell
Development Control Manager
Date: 16 May 2000

If this notice grants permission to proceed with the proposal the applicant is reminded that it relates to planning permission only and does not constitute approval under any other legislation including Building Regulations.

Client:

30.MAR2000* 1:1 20

Mr and Mrs Anderson
3 Comfrey Close
Wokingham
Berkshire

Project:

Single Storey Front Extension

Location:

3 Comfrey Close
Wokingham
Berkshire

Excel Design
XLØØ632

Drawing Number	Drawing List	Drawings Included
1	Title Page	✓
2	Contents	✓
3	Location Plan	✓
4	Block Plan	✓
5	Notes 1	✓
6	Notes 2	✓
7	Notes 3	
8	Front Elevations	✓
9	Left Side Elevations	✓
10	Right Side Elevations	✓
11	Rear Elevations	
12	Ground Floor Plans 1	✓
13	Ground Floor Plans 2	✓
14	First Floor Plans 1	
15	First Floor Plans 2	
16	Second Floor Plan	
17	Section	✓
18	Section	✓

CLIENT:	Mr and Mrs Anderson, 3 Comfrey Close, Wokingham Berks.	DESCRIPTION: Drawing List	
PROJECT:	Single storey front extension	SCALE:	DRAWING No: 00632/ 2
DATE:	March 2000	REVISION:	

DRAWING MUST BE READ WITH NOTES. DIMENSIONS AND DETAILS TO BE CHECKED ON SITE BEFORE PRICING AND CONSTRUCTION

© COPYRIGHT RESERVED

Excel Design

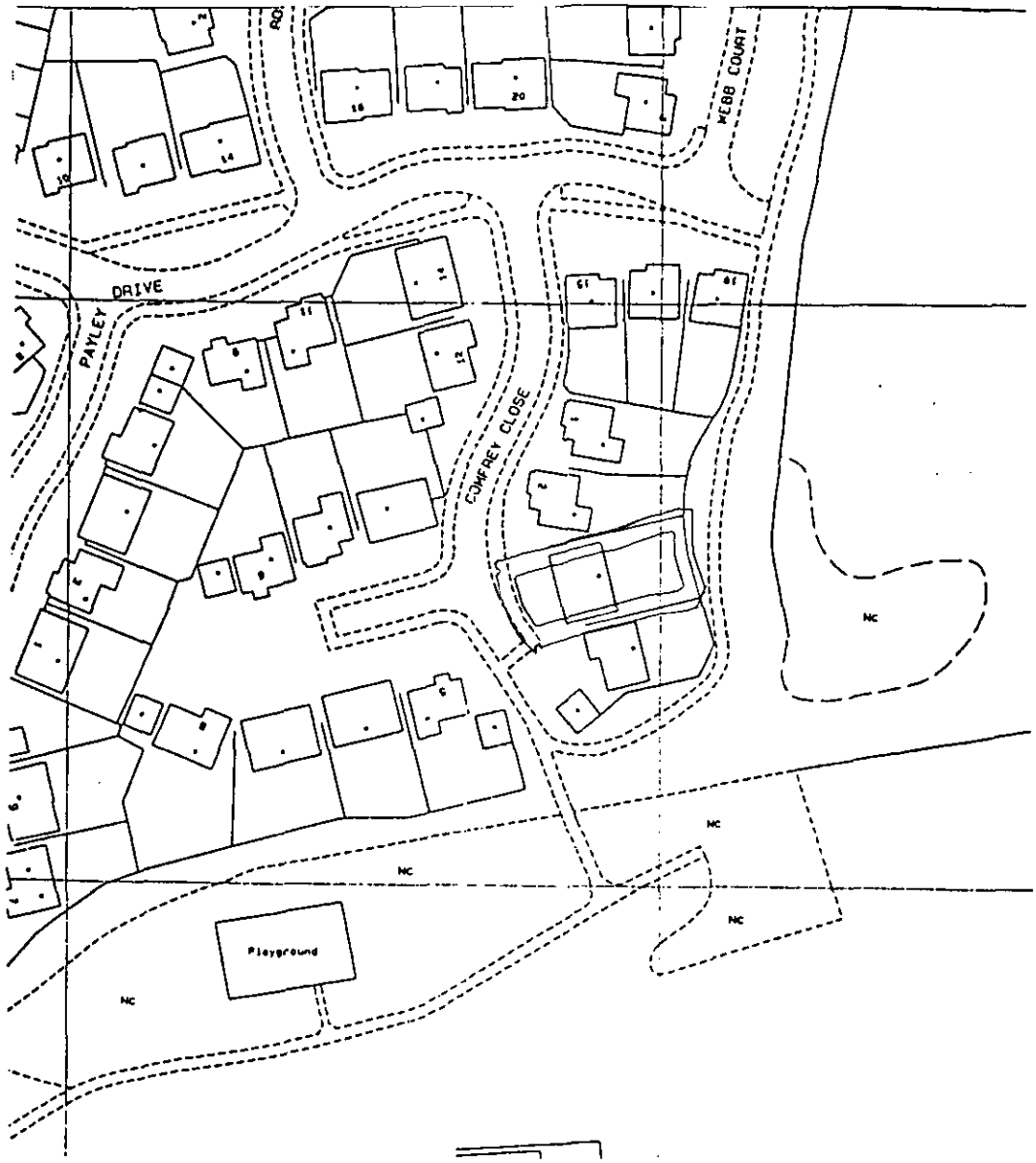

CLIENT:	Mr and Mrs Anderson, 3 Comfrey Close, Wokingham Berks.	DESCRIPTION:	Location Plan		
PROJECT:	Single storey front extension	SCALE:	1:1250	DRAWING No:	00632/ 3
DATE:	March 2000	REVISION:			

DRAWING MUST BE READ WITH NOTES. DIMENSIONS AND DETAILS TO BE CHECKED ON SITE BEFORE PRICING AND CONSTRUCTION

© COPYRIGHT RESERVED

Excel DeSign

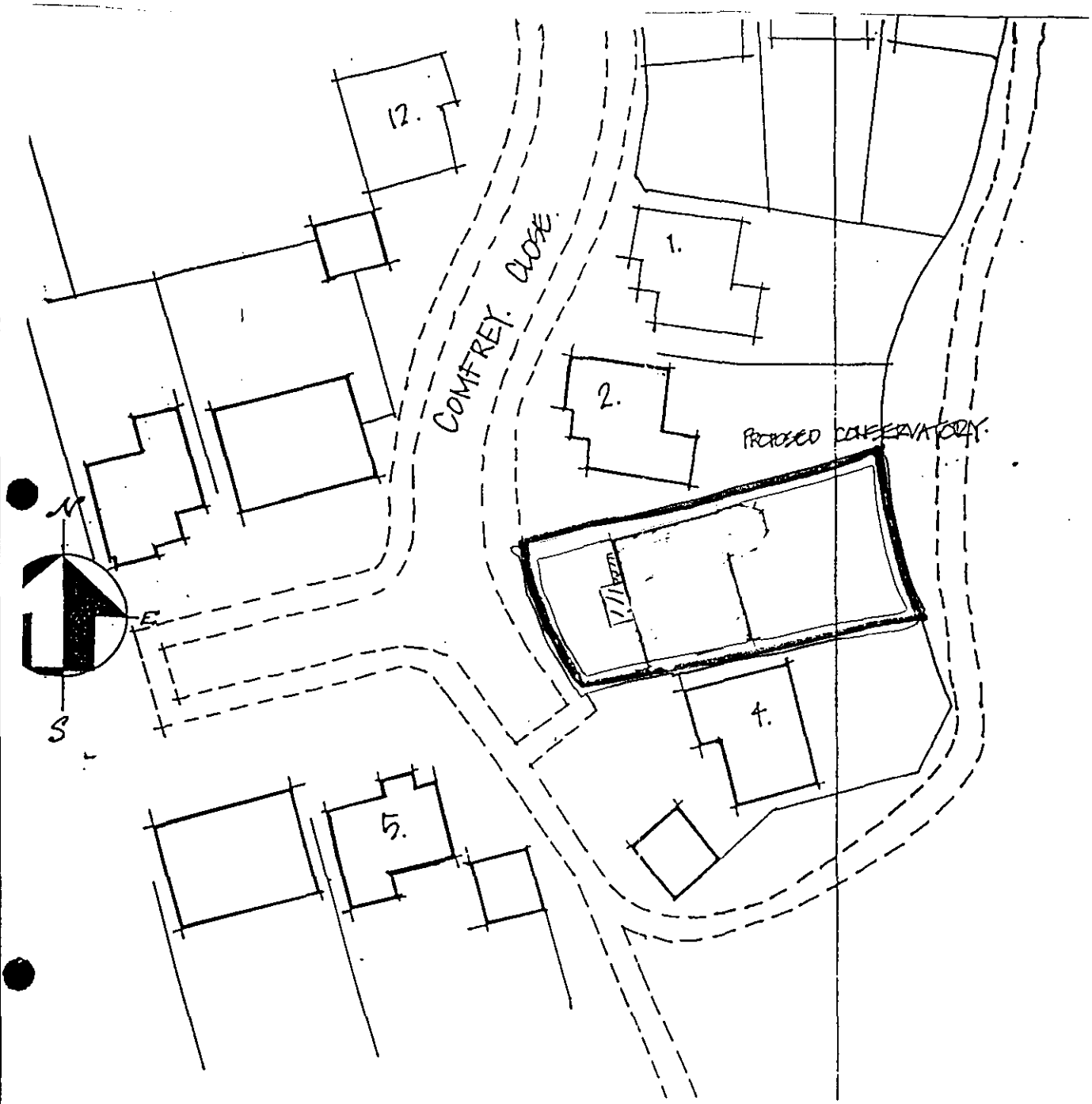

CLIENT:	Mr and Mrs Anderson, 3 Comfrey Close, Wokingham Berks.	DESCRIPTION:	Block Plan		
PROJECT:	Single storey front extension	SCALE:	1:500	DRAWING No:	00632/ 4
DATE:	March 2000	REVISION:			

DRAWING MUST BE READ WITH NOTES. DIMENSIONS AND DETAILS TO BE CHECKED ON SITE BEFORE PRICING AND CONSTRUCTION

© COPYRIGHT RESERVED

Excel DeSign

D 22/5/00

These drawings have been prepared for the purpose of obtaining Planning and/or Building Regulation approval. They are not intended as a work specification or as detailed working drawings. Those carrying out the work must satisfy themselves of all dimensions and details before pricing and construction. No work should be carried out until all the necessary approvals have been obtained and the building inspector has been notified of the intention to start work.

There must be no encroachment on neighbouring property without prior written agreement between respective parties and in accordance with the requirements of the Party Wall Act.

GENERAL NOTES
(Not a specification)

1. FOUNDATIONS
Strip concrete foundations minimum depth as shown on drawings and in accordance with N.H.B.C practice note 3 - 1985 table 7a. Final decision on design, type and depth of foundations to be made by Local Authority Building Control Officer on site. Foundations to rest on suitable load bearing strata and to comply fully with Building Regulations. 100mm thick class 'A' dense concrete block work and semi-engineering brickwork below d.p.c level. Lean mix cavity fill up to ground level. Existing foundation to be laid open for inspection when and where required by the building inspector.

2. D.P.C
Polymer type of d.p.c's to all walls minimum 150mm above ground level. 150 mm wide x 14 mm Dampcor or similar d.p.c to all cavity closers fitted in accordance with manufacturers specification. D.p.c to lap d.p.m minimum 50mm. D.p.c to be continuous with existing.

3. GROUND FLOOR SLAB
Floor finish to line with existing on 65 mm sand and cement screed with light reinforcing mesh on 50 mm thick S.D grade Jablite floor insulation fitted to manufactures specification. Concrete, suspended insitu slab resting on inner skin of cavity walls and perimeter dwarf walls against existing walls where required . Slab depth and bottom reinforcing with 40 mm cover as shown on section drawing. Remove all vegetation below slab.

4. EXTERNAL WALLS
100 mm concrete block rendered to match existing. 50 mm insulated cavity, 100 mm thick lightweight thermal insulating block work inner skin 'Celcon' or similar. 13 mm lightweight plaster and skim internally. Cavity insulated with 50 mm thick 'Rockwool' cavity batts fitted to manufacturer's specification to give 0.45 w/m^2K 'U' value. Provide mild steel galvanized wall ties at 900 mm horizontal and 450 mm vertical centers. Staggered formation to B.S 1243 amended. Close cavity at eaves level. Cavity to be continuous and new/existing walls fully bonded.

5. INTERNAL WALLS
None

JOINERY
All softwood to be pressure impregnated preservative treated to B.S 4072.

7. GLAZING
All doors and windows to be fitted with double glazed factory sealed units. Full height glazed screens and doors to be fitted with class B safety glass. All opening lights to give minimum 1/20th floor area in ventilation. All windows fitted with 8000 mm^2 trickle ventilator.

8. LINTELS
To be Catnic steel lintels or similar (unless otherwise stated) to manufacturer's span/load tables. Minimum 150 mm end bearing with cavity trays over.

CLIENT:	Mr and Mrs Anderson, 3 Comfrey Close, Wokingham Berks.	DESCRIPTION: Notes	
PROJECT:	Single storey front extension	SCALE:	DRAWING No: 00632/ 5
DATE:	March 2000	REVISION:	

DRAWING MUST BE READ WITH NOTES. DIMENSIONS AND DETAILS TO BE CHECKED ON SITE BEFORE PRICING AND CONSTRUCTION

© COPYRIGHT RESERVED

Excel Design

GENERAL NOTES
(Not a specification)

9. PITCHED ROOF
Concrete interlocking tiles to match existing to be fixed in accordance with manufacturers specification. on 38 x 25mm softwood treated battens on untearable roofing felt to B.S 747. Timber sizes and roof design as section drawing. 100 x 75mm softwood wall plate anchored to walls using mild steel galvanized straps at 1200mm centers. Ceiling finished with 12.5mm foil backed plaster board fully nogged and finished to match existing. 100mm fiberglass quilt insulation laid between joists and 100 mm laid over joists. Provide mild steel galvanized gable straps at 1000mm centers fixed to 3 No. rafters and wall. 25mm thick softwood fascia and soffite to match existing with continuous ventilation to give cross ventilation.

10. STRUCTURAL STABILITY/ STRUCTURAL TIMBERS
Where ceiling and floor joists run parallel to external walls, lateral restraint to be achieved by metal straps at 1200 mm centres spanning three joists. Provide mild steel galvanized gable straps at 1000 centres fixed to three rafters and wall. Wall plates to be anchored down with 30 x 5 mm straps at 2m centres.

11. STEELWORK
All steelwork to engineer's calculations and encased in 2 layers of 12.5mm plasterboard with staggered joints and 7mm vermiculite plaster skim to give 1/2 hour fire resistance.

MECHANICAL VENTILATION
None

13. S.W. DRAINAGE
100 diameter half round gutters falling to 63 diameter rain water pipes connecting to 100 diameter below ground drain runs at minimum 1:60 fall to new soakaways in garden. Drains encased in 150mm peashingle. Soakaways minimum 5m away from buildings and $1m^3$ capacity minimum below pipe entry. Filled with hardcore and 75mm concrete capping with minimum 300mm top soil cover.

14. F.W. DRAINAGE
None

CLIENT:	Mr and Mrs Anderson, 3 Comfrey Close, Wokingham Berks.	DESCRIPTION: Notes	
PROJECT:	Single storey front extension	SCALE:	DRAWING No: 00632/ 6
DATE:	March 2000	REVISION:	

DRAWING MUST BE READ WITH NOTES. DIMENSIONS AND DETAILS TO BE CHECKED ON SITE BEFORE PRICING AND CONSTRUCTION

© COPYRIGHT RESERVED

Excel Design



EXISTING FRONT ELEVATION



PROPOSED FRONT ELEVATION

APPROVED

CLIENT:	Mr and Mrs Anderson, 3 Comfrey Close, Wokingham Berks.	DESCRIPTION:	Front Elevations		
PROJECT:	Single storey front extension	SCALE:	1:100	DRAWING No:	00632/ 8
DATE:	March 2000	REVISION:			

DRAWING MUST BE READ WITH NOTES. DIMENSIONS AND DETAILS TO BE CHECKED ON SITE BEFORE PRICING AND CONSTRUCTION

© COPYRIGHT RESERVED

Excel Design

D 22/5/00

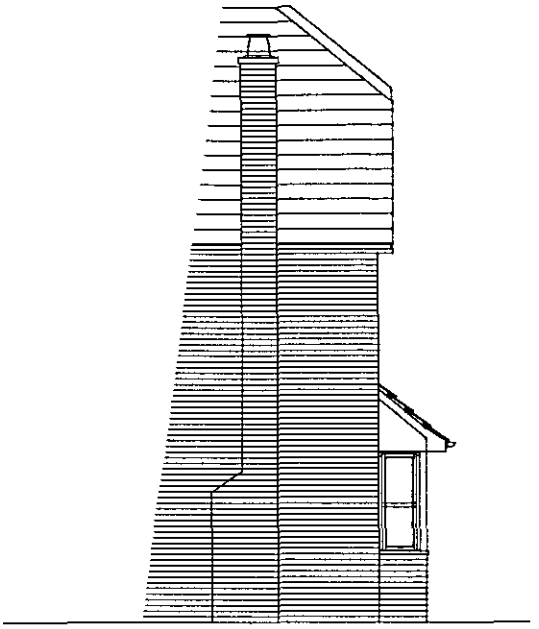

EXISTING LEFT SIDE ELEVATION

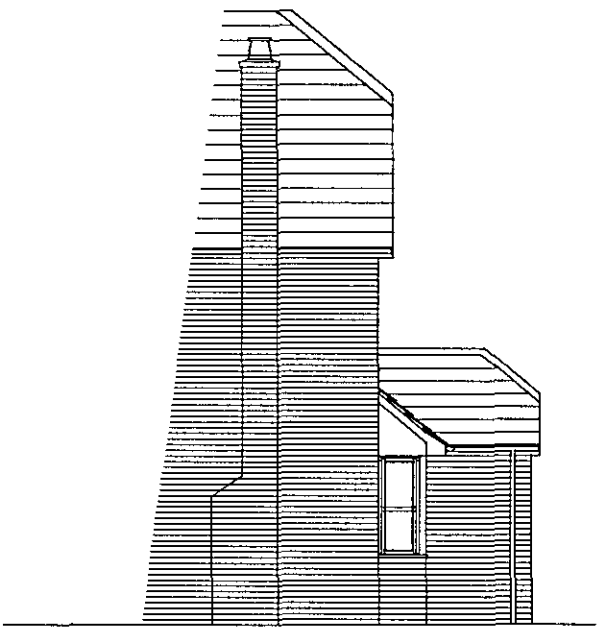

PROPOSED LEFT SIDE ELEVATION

APPROVED

CLIENT:	Mr and Mrs Anderson, 3 Comfrey Close, Wokingham Berks.	DESCRIPTION:	Left Side Elevations		
PROJECT:	Single storey front extension	SCALE:	1:100	DRAWING No:	00632/ 9
DATE:	March 2000	REVISION:			

DRAWING MUST BE READ WITH NOTES. DIMENSIONS AND DETAILS TO BE CHECKED ON SITE BEFORE PRICING AND CONSTRUCTION

© COPYRIGHT RESERVED

Excel DeSign

D 22/3/00

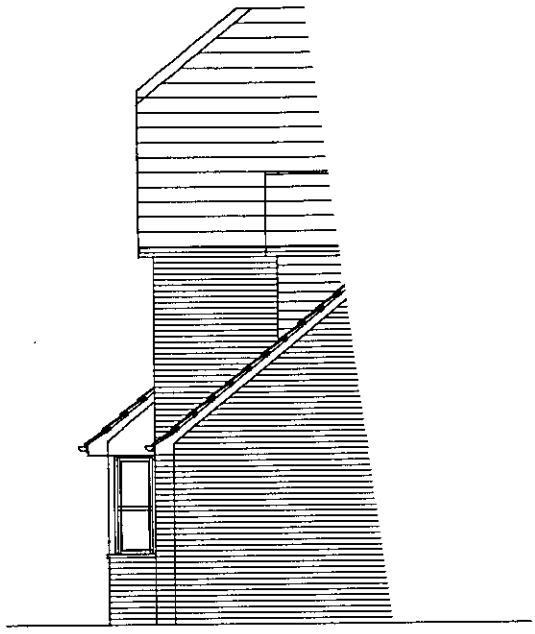

EXISTING RIGHT SIDE ELEVATION

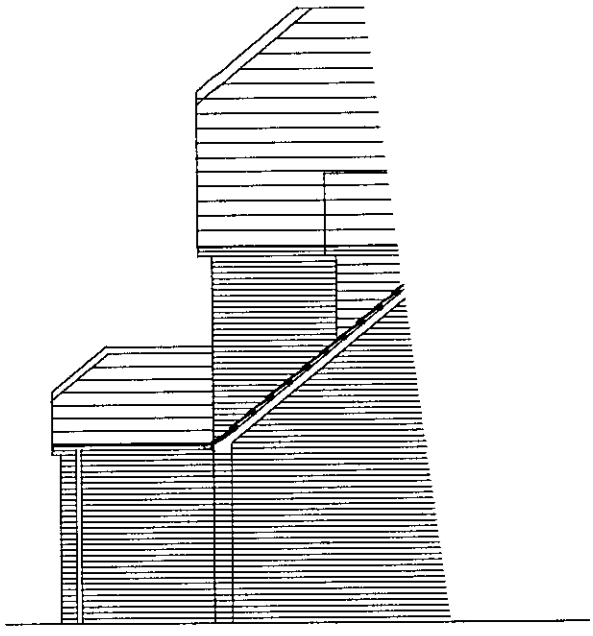

PROPOSED RIGHT SIDE ELEVATION

APPROVED

CLIENT:	Mr and Mrs Anderson, 3 Comfrey Close, Wokingham Berks.	DESCRIPTION:	Right Side Elevations		
PROJECT:	Single storey front extension	SCALE:	1:100	DRAWING No:	00632/ 10
DATE:	March 2000	REVISION:			

DRAWING MUST BE READ WITH NOTES. DIMENSIONS AND DETAILS TO BE CHECKED ON SITE BEFORE PRICING AND CONSTRUCTION

© COPYRIGHT RESERVED

Excel Design

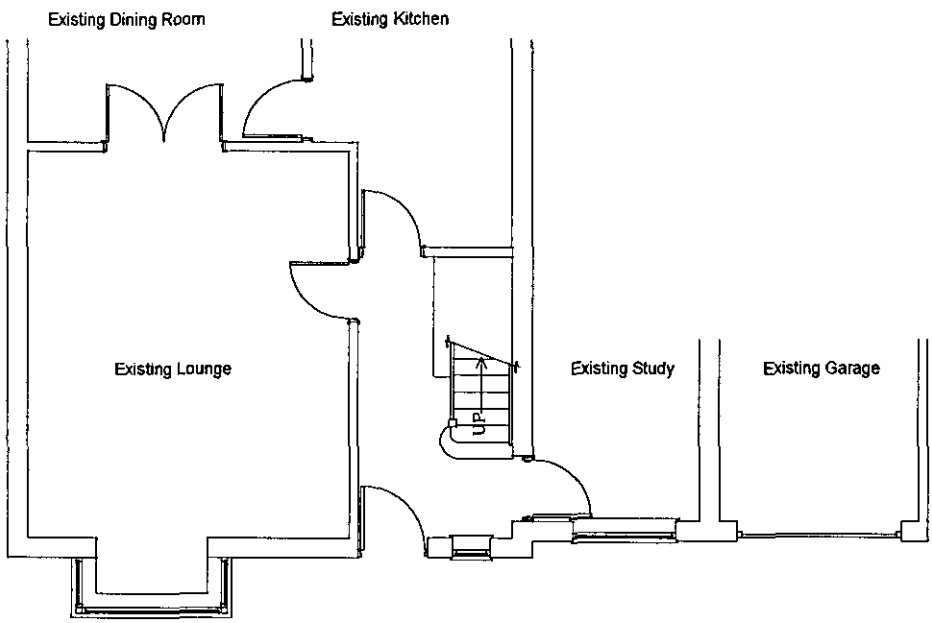

EXISTING GROUND FLOOR PLAN

CLIENT:	Mr and Mrs Anderson, 3 Comfrey Close, Wokingham Berks.	DESCRIPTION:	Ground Floor Plans		
PROJECT:	Single storey front extension	SCALE:	1:100	DRAWING No:	00632/ 12
DATE:	March 2000	REVISION:			

DRAWING MUST BE READ WITH NOTES. DIMENSIONS AND DETAILS TO BE CHECKED ON SITE BEFORE PRICING AND CONSTRUCTION

© COPYRIGHT RESERVED

Excel Design

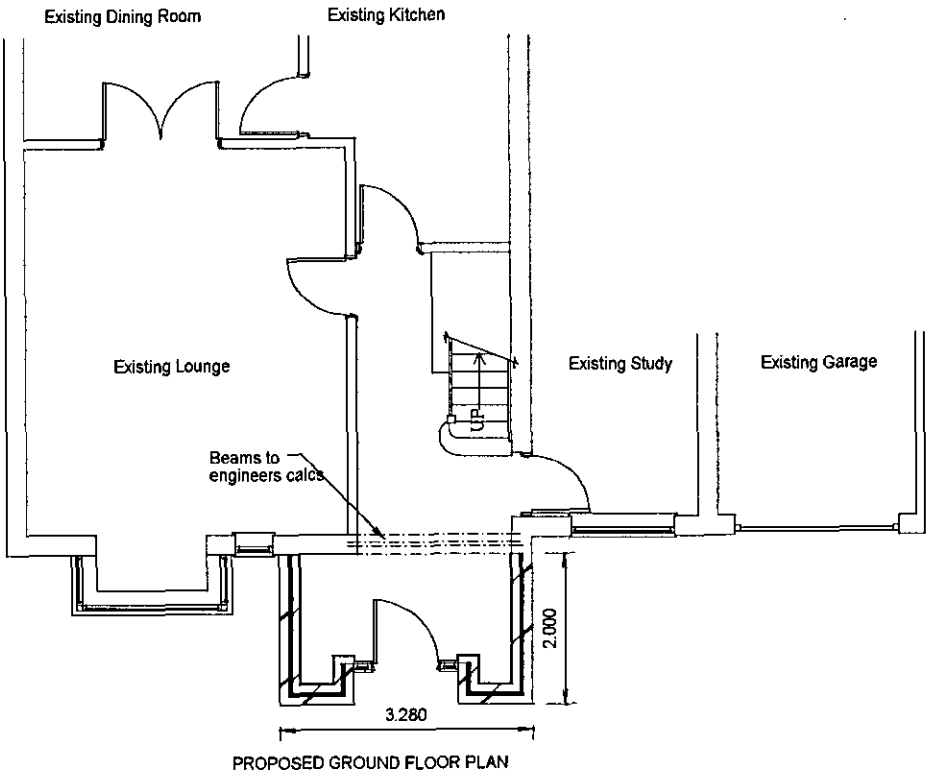

PROPOSED GROUND FLOOR PLAN

APPROVED

CLIENT:	Mr and Mrs Anderson, 3 Comfrey Close, Wokingham Berks.	DESCRIPTION:	Ground Floor Plans		
PROJECT:	Single storey front extension	SCALE:	1:100	DRAWING No:	00632/ 13
DATE:	March 2000	REVISION:			

DRAWING MUST BE READ WITH NOTES. DIMENSIONS AND DETAILS TO BE CHECKED ON SITE BEFORE PRICING AND CONSTRUCTION

© COPYRIGHT RESERVED

Excel Design

4 22/5/00

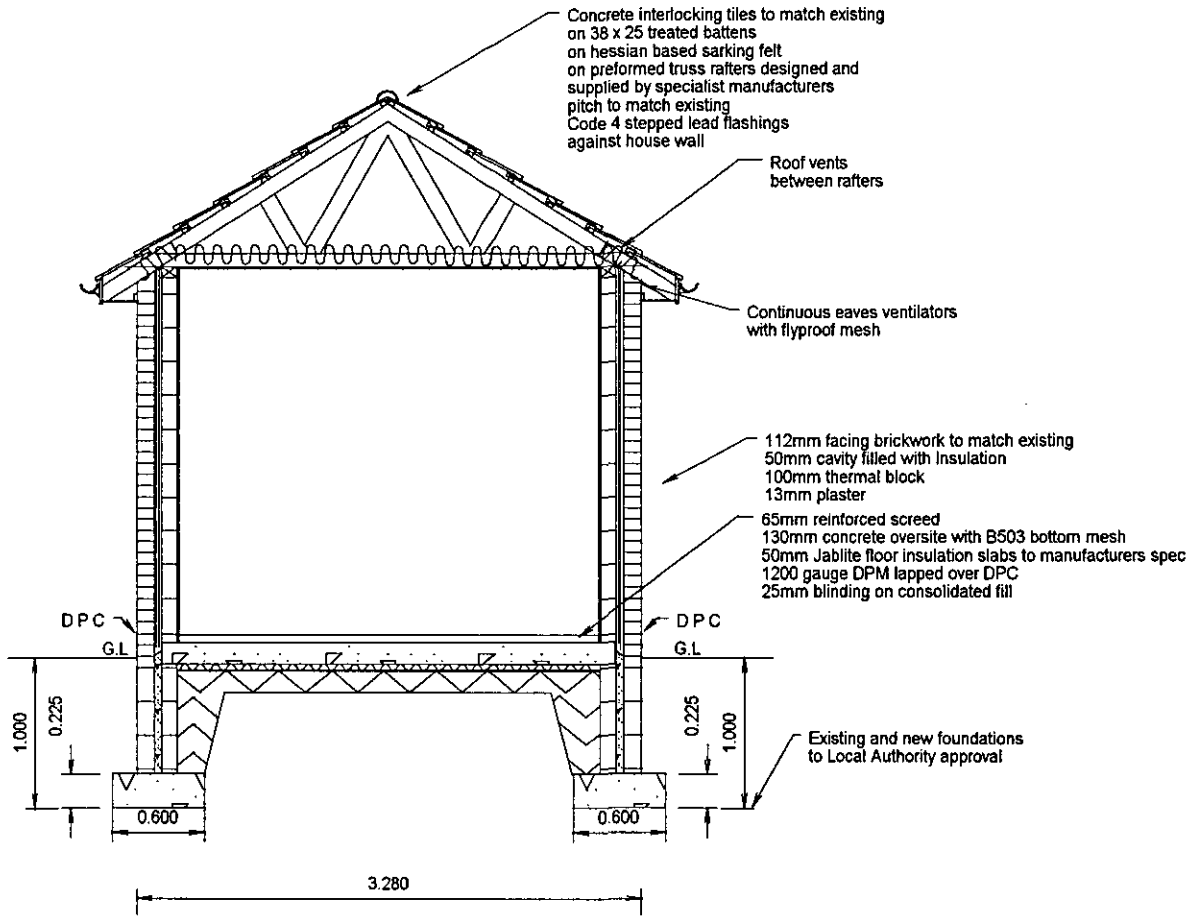

CLIENT:	Mr and Mrs Anderson, 3 Comfrey Close, Wokingham Berks.	DESCRIPTION:	Section		
PROJECT:	Single storey front extension	SCALE:	1:100	DRAWING No:	00632/ 17
DATE:	March 2000	REVISION:			

DRAWING MUST BE READ WITH NOTES. DIMENSIONS AND DETAILS TO BE CHECKED ON SITE BEFORE PRICING AND CONSTRUCTION

© COPYRIGHT RESERVED

Excel Design

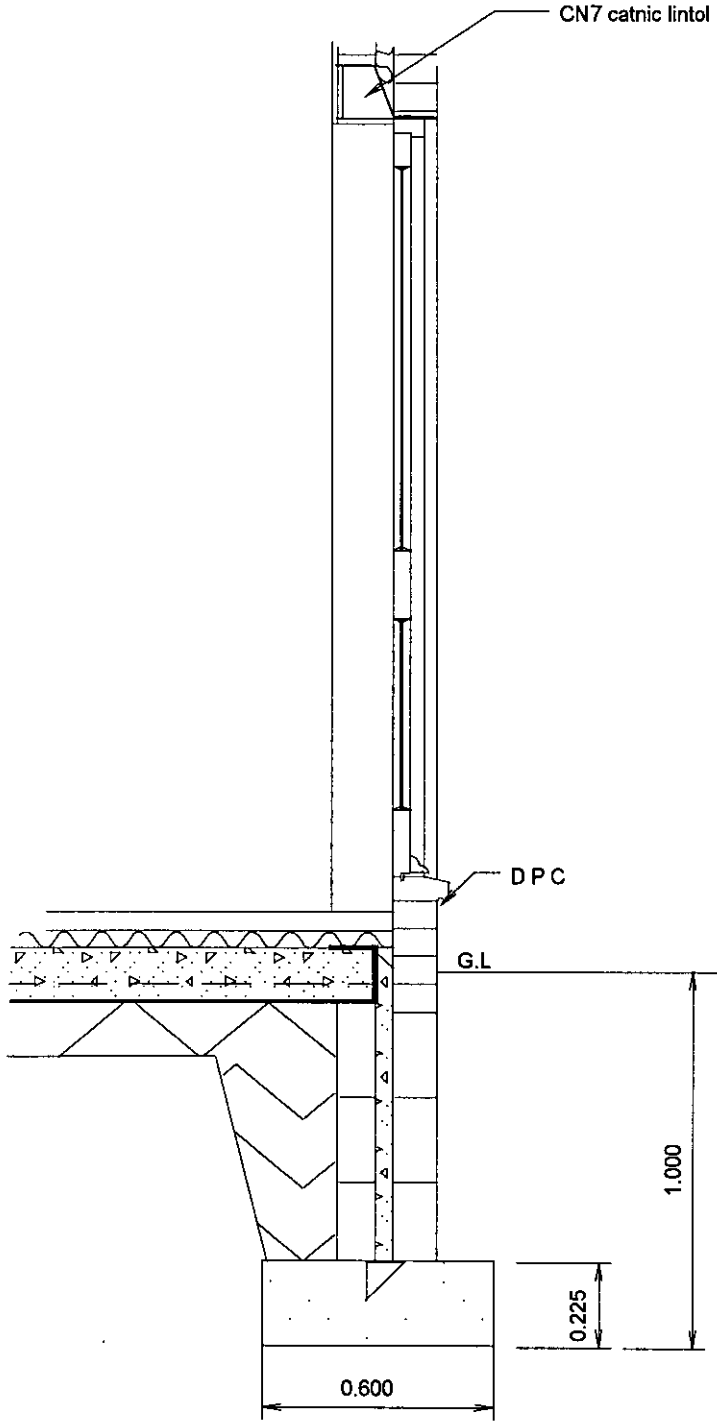

TYPICAL EXTERNAL DOOR FRAME DETAIL

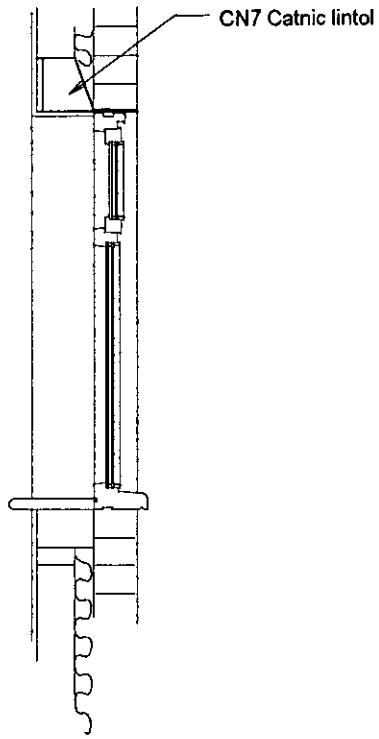

TYPICAL WINDOW DETAIL

CLIENT:	Mr and Mrs Anderson, 3 Comfrey Close, Wokingham Berks.	DESCRIPTION:	Section		
PROJECT:	Single storey front extension	SCALE:	1:50	DRAWING No:	00632/ 18
DATE:	March 2000	REVISION:			

DRAWING MUST BE READ WITH NOTES. DIMENSIONS AND DETAILS TO BE CHECKED ON SITE BEFORE PRICING AND CONSTRUCTION

© COPYRIGHT RESERVED

Excel Design

Additional Notes:

Excel Design Ltd

Architectural Design

17 Gorse Ride South, Finchampstead, Wokingham,
Berkshire RG40 4EH

Phone: 0118 973 7336 ***Fax:*** 0118 973 4175

Drawn By: George Avis

Associate of the Chartered Institute of Building

GeorgeAvis@ExcelDesign.Ltd.UK

Excel Design

Received by Wokingham District Council

Application No: F/2000/1120

Proposal:
Proposed single storey front extension to dwelling.

Location:
3, Comfrey Close, , Wokingham.

The application is available for inspection at Wokingham District Council's offices during the following times:

PLANNING DEPARTMENT, SHUTE END, WOKINGHAM TEL (0118) 974 6428
8.30 - 5.00 Monday - Thursday & 8.30 - 4.00 Friday

WOODLEY LIBRARY HEADLEY ROAD WOODLEY (9.30am - 7.00pm Mon, Thurs & Fri. 9.30am - 5.00pm Tues, 9.30am - 1.00pm Saturday. closed all day Wednesday). If you intend to view this application at Woodley Library (see details above) please allow 4 days from the date of this letter for delivery of plans.

Comments should be sent in writing QUOTING THE APPLICATION NUMBER to the Case Officer Natalie Brown P.O. Box 157 Council Offices, Shute End, Wokingham Berkshire, RG40 1WR to arrive on or before 07/05/2000. Written comments submitted will become available for public inspection.

In view of the very large number of planning applications and letters of comment received, it will not normally be possible for an individual reply to observations made. However any comments will be taken into account when the application is determined and you will be notified of the decision.

Head Planning and Transportation

**********FILE COPY**********

Tel: (0118) 974 6492

Date: **13 April 2000**

My ref: F/2000/1120

CONFIDENTIAL

Councillor Robertson
47 Proctors Road
Wokingham
RG40 1RP

Environmental Services Department
Planning Services
P.O. Box 157
Shute End, Wokingham
Berkshire RG40 1WR
Tel: (0118) 974 6000
Fax: (0118) 974 6484
Minicom No: (0118) 974 6991
DX: 33506 – Wokingham

Dear Councillor

Application Number: F/2000/1120
3, Comfrey Close, , Wokingham.
Proposed single storey front extension to dwelling.

I write to let you know that the above mentioned house holder application has been received

At this stage a recommendation has not yet been made. This form should only be returned if it is likely that you may wish the application to be listed for consideration by the Development Control Sub-Committee. This form must be received no later than 28 days from the date of this letter.

If you have any questions please do not hesitate to contact **Natalie Brown** on **(0118) 974 6492**.

Yours faithfully

Head of Planning and Transportation

LISTING FORM

Case officer: **Natalie Brown** Application Number: **F/2000/1120**
3, Comfrey Close, , Wokingham.
Proposed single storey front extension to dwelling.
I wish this application to be listed should the officers recommendation be for_____
and my reason(s) are_____
_____
_____

Signed: _____ Date: _____
Councillor Robertson

**********FILE COPY**********

**********FILE COPY**********

Tel: (0118) 974 6492

Date: **13 April 2000**

My ref: F/2000/1120

CONFIDENTIAL

Councillor Edwards
30 Mays Road
Wokingham
RG40 1RW

Environmental Services Department
Planning Services
P.O. Box 157
Shute End, Wokingham
Berkshire RG40 1WR
Tel: (0118) 974 6000
Fax: (0118) 974 6484
Minicom No: (0118) 974 6991
DX: 33506 – Wokingham

Dear Councillor

Application Number: F/2000/1120
3, Comfrey Close, , Wokingham.
Proposed single storey front extension to dwelling.

I write to let you know that the above mentioned house holder application has been received

At this stage a recommendation has not yet been made. This form should only be returned if it is likely that you may wish the application to be listed for consideration by the Development Control Sub-Committee. This form must be received no later than 28 days from the date of this letter.

If you have any questions please do not hesitate to contact **Natalie Brown** on **(0118) 974 6492**.

Yours faithfully

Head of Planning and Transportation

LISTING FORM

Case officer: **Natalie Brown** Application Number: **F/2000/1120**
3, Comfrey Close, , Wokingham.
Proposed single storey front extension to dwelling.
I wish this application to be listed should the officers recommendation be for_____
and my reason(s) are_____
_____
_____

Signed: _____ Date: _____
Councillor Edwards

**********FILE COPY**********

**********FILE COPY**********

Tel: (0118) 974 6492

Date: **13 April 2000**

My ref: F/2000/1120

CONFIDENTIAL

Councillor Brown
12 Paice Green
Wokingham
RG40 1YN

Environmental Services Department
Planning Services
P.O. Box 157
Shute End, Wokingham
Berkshire RG40 1WR
Tel: (0118) 974 6000
Fax: (0118) 974 6484
Minicom No: (0118) 974 6991
DX: 33506 – Wokingham

Dear Councillor

Application Number: F/2000/1120
3, Comfrey Close, , Wokingham.
Proposed single storey front extension to dwelling.

I write to let you know that the above mentioned house holder application has been received

At this stage a recommendation has not yet been made. This form should only be returned if it is likely that you may wish the application to be listed for consideration by the Development Control Sub-Committee. This form must be received no later than 28 days from the date of this letter.

If you have any questions please do not hesitate to contact **Natalie Brown** on **(0118) 974 6492**.

Yours faithfully

Head of Planning and Transportation

LISTING FORM

Case officer: **Natalie Brown** Application Number: **F/2000/1120**
3, Comfrey Close, , Wokingham.
Proposed single storey front extension to dwelling.
I wish this application to be listed should the officers recommendation be for_____
and my reason(s) are_____
_____
_____

Signed: _____ Date: _____
Councillor Brown

**********FILE COPY**********

finalised

DEVELOPMENT CONTROL/BUILDING CONTROL CHECKLIST

CHECKLIST WHEN A BUILDING REGULATION APPLICATION HAS BEEN RECEIVED.

SITE DETAILS	CASE OFFICER
PLANNING APPLICATION NUMBER	1120 NB
BUILDING CONTROL NUMBER	K/2000/0494 Howard
APPLICANT/AGENT	Excel
ADDRESS OF SITE	3 Comfrey Close WOKINGHAM
DESCRIPTION OF PROPOSED WORK	S/S front ext.

DRAWING NUMBERS	BC	DC
BLOCK PLAN	00632/4	00632/4
ELEVATIONS	8, 9, 10	8, 9, 10
FLOOR PLANS	13	13

CHECKLIST	1ST CHECK	2ND CHECK
PERMITTED DEVELOPMENT		
APPLIC. NECESSARY-NOT RECEIVED		
APPLIC.RECEIVED & APPROVED	16/5/00	
APPLIC.RECEIVED-NO DECISION		
APPLIC.REFUSED		
DIFFERENCES BETWEEN DC/BC DRAWINGS	None	
IF YES, WHAT ARE THE DIFFERENCES ?	—	
DATE	22/5/00.	

PROBLEMS	REQUESTED	RECEIVED	REMINDER
PLANNING PERMISSION NEEDED			
REVISED PLANS NEEDED			
PLANNING APPLIC.REFUSED			
WAIT FOR PLANNING DECISION			

COMMENCED ON SITE	
NO PLANNING DECISION	
NO PLANNING APPLICATION	

WORK SHEET FOR : Natalie Brown

Application Number : F/2000/1120

Applicant : Mr & Mrs Anderson C/O Excel Design Ltd.

Location : 3, Comfrey Close, , Wokingham.
Proposal : Proposed single storey front extension to dwelling.

Site Notice Displayed ? :

YES	NO	DATE
✓		2/5

Date of Neighbour Notifications : .....

Date of Site Visit : 2/5

Date Registered : 30/03/2000

Earliest Date for Decision : 07/05/2000

Latest Consultation Date/Site Notice Expiry Date : 07/05/2000

Application Expiry Date: 25/05/2000

Consultation Responses :

Wokingham TC : 8/5 - no objections.

Neighbours/SN : none received.

Planning Issues : (ID'd set)

1) Impact upon neighbouring properties
2) Impact upon the streetscene

} WBE1, WOS3 SBE1.

Application Number: F/2000/1120

Appraisal :

1) Impact upon neighbouring properties
The proposed development is for a single storey front extension forming a porch.
It will have a pitched roof with a 'k' hip at the front mirroring the roof design of the main dwelling. It will be 2.2m to eaves & 3.2m to the ridge. It will be 3.3m width x 2m depth (floor area).
It will be set in 3.5m from the lounge side of the dwelling & app 5m from the garage side. (The detached dwelling is app 1 – 1.5m from the boundaries on either side & set back app 6m from the road).
The proposed development will not overlook, overshadow/ing or be overbearing to neighbouring properties ∴ no detrimental impact to neighbouring properties

2) Impact upon the streetscene.
Although the porch will be beyond the main line of dwelling by 2m courtesy close seeing differing front building lines as is shown by site location 1:1250.
∴ the development is small scale ∴ no detrimental impact to the streetscene.

Recomendation : Approval: ☑ **Refusal:** ☐
(tick appropriate box)

Application Number F/2000/1120
Conditions/Reasons for Refusal

No	Std Con	Std Reas	Non Std Conditions / Reasons for Refusal
	SC01	SR02	
	SC53	SR12	WORK

RECORD OF SITE VISIT

SITE ADDRESS: 3 Comfrey Close Wokingham. APPLICATION NUMBER: F/2000/1120	OFFICER: Natalie Brown DATE OF SITE VISIT: 2/5

1 SITE/STATUTORY NOTICE DISPLAYED ? ✓ 2/5 lamp post in front of property

2. DESCRIPTION OF SURROUNDINGS

Residential - established, but new -
detached - some vary in design. (ie) x1/x2 integ garage - detached garages
open plan style f. garden -
some shrubs & low dwing fencing

3. DESCRIPTION OF SITE/BUILDING

low fencing with No 2.
shrubs in garden

4. RELATIONSHIP TO ADJOINING PROPERTIES

Detached.

5. SITE CONSTRAINTS

TREES /

ACCESS/PARKING single garage + driveway.

LEVELS /

BOUNDARY TREATMENT as above.

OTHERS

WOKINGHAM D.C. DEVELOPMENT CONTROL

Start date: 31 [illegible]	Map No. 69 Site 0-04
Officer: NAB	Application No. F/2000/1120
	Easting: ..... Flood Pln .....
	Northing: ..... Mineral .....

Level: ☐ Sub Committee ☑ Delegated ☐ Sec. State
☐ Incorrect Fee ☐ Invalid ☐ PD

Description:
(F) Proposed Single Storey front extension to dwelling

Location: 3 ~~Comfrey~~ Comfrey Close

Parish: Wokingham Ward: Norreys
13-4-2000

Applicant: Mr & Mrs Anderson

Fee Received 95.00 Required ..... Additional ..... Refund .....

Enforcement (3) Section to be notified ☐ tick if required

Additional information required for validation

		Reason	Requested	Received
1	1:2500 OS location plan showing property edged in blue/red			
2	1:500 block plan showing existing & proposed dev. + adj. Properties			
3	Forms unsigned			
4	Correct S 66 certificate			
5	Elevation plans			
6	Floor plans			
7	Metric scale disclaimer			
8	Encroachment letter			
9	Miscellaneous			

APPLN NO. _____

ACTION REQUIRED BY DEVELOPMENT CONTROL

Conservation Area .....

Listed Building 1 2 2*

Advertisement Required .....

Date Site Notice Sent : 13.4.2000 Parish Council Informed - YES / NO

INTERNAL CONSULTATIONS

Building Control	NF: .....
Landscape	NK: .....
Trees	NK: .....
Conservation Officer	NK: .....
Environmental Health	NA: .....
Housing	NA: .....
Leisure & Cultural services	PA: .....
Public Rights of Way	PA: .....
Property	NG: .....
District Secretary (only if called in by SOS)	MA: .....
Policy & Plans	QA: .....
Strategic Planning (JSPU)	HA: .....
Minerals (BABTIE)	GA: .....
Archaeological Site (BABTIE)	: .....
Education	AP: .....
Social Services	BT: .....
Highways	XA: .....

EXTERNAL CONSULTATIONS

Adjacent D P A	: .....
Adjacent Parish	: .....
Southern Electricity Board	BN: .....
British Gas	BM: .....
PSA Oil Pipeline	BD: .....
Transco	: .....
Environment Agency	BP: .....
Rail Track	BI: .....
Police Arch. Liaison Officer	PC: .....

HERITAGE BODIES

The Georgian Group	KC: .....
Ancient Monuments Society	KA: .....
Council for British Arch.	KB: .....
RCHME	KF: .....
Telecommunications (NRPB)	: .....
Sport England	: .....

OTHERS:

No re-apps. .....

.....

.....

NEIGHBOURS:

SIN 1, 2, 4, 5 + 11 Comfrey close ✓

.....

.....

.....

.....

.....

.....

.....

.....

WOKINGHAM TOWN COUNCIL CONSULTATION SHEET

PLANNING SERVICES	HPT
POL	TLS
DC	ENF
APP	
CS	
08 MAY 2000	
COPIES TO:	ACK:
	FILE:

Case officer: Natalie Brown

Application Number: F/2000/1120

Proposal: Proposed single storey front extension to dwelling.

Site Address: 3 Comfrey Close, Wokingham

Applicant: Mr & Mrs Anderson C/O Excel Design Ltd

Your observations are required in respect of this application by **07/05/2000**

No objections.

SIGNED: _____ **DATE:** 04/05/00

CLERK TO Wokingham Town Council

30.MAR2000* 1120

ADDRESS 3 Comfrey Close PARISH Wokingham

PLOT No. 116 ORD. SHEET No. SU 8269 69

BUILDER

Plan No.	Applicant	Description of Development	Date of Decision	Decision
23078	TAYLOR WOODROW	O/L.	25-4-85	Ref
31261	"	RES DEV.	1-9-88	CA
36329	"	"	24-8-90	CA
37923	TWIGDEN HOMES	DET. HOUSE & GARAGE	31-7-91	CA
96/63784/F				PD

DATE OF COMPLETION

MINISTRY DECISION 23078 - APPEAL GRANTED - 21.7.87

SPECIAL ORDERS P.D Enq. Mr + Mrs G Tempest. Conv part garage to living accom. 19.11.97 NJB

DRAINAGE

091074

By Hand 29/3/00

1959/a

30.MAR2000 * 01120

HOUSEHOLDER PLANNING APPLICATION

Please answer all questions in CAPITAL letters. If any question does not apply, put N/A in the space.
Please submit 6 copies of the completed form and your plans to: Planning Department, Wokingham District Council, PO Box 157, Shute End, Wokingham, Berkshire, RG40 1WR.
Notes to help you fill in the form are attached.
If you still have any questions about the form, please call Ian Jordan on 01734 778763.

For office use only
Application No.

You can use this form for applying for full permission only for:

* extensions
* loft conversions
* garages and outbuildings
* garden fences or walls
* new or altered access

This form is for householders (and their agents) occupying houses or bungalows only. You must use the General Planning Application form for all other types of application.

1.	YOUR NAME	M TOWNS ANDERSON
	ADDRESS	3 COMFREY CLOSE
		WOKINGHAM
	POST CODE	Tel. No.
2. If you have an agent and want all correspondence to be sent to them	AGENT'S NAME	EXCEL DESIGN LTD
	ADDRESS	17 GORSE RIDE SOUTH
		FINCHAMPSTEAD
	POST CODE	RG40 4EH Tel. 01189737336
3. On the plans outline the whole site in RED. Any OTHER land in your ownership or control outline in BLUE.	SITE LOCATION	3 COMFREY CLOSE
		WOKINGHAM
4. Give brief details of the proposal e.g. two storey side extension.	ABOUT THE APPLICATION	SINGLE STOREY
		FRONT EXTENSION

5. ARE THERE ANY TREES ON THE SITE? YES / ~~NO~~
If YES, please show their positions, spread, and species of the trees on the plans. Indicate any which are to be felled.

6. PLEASE LIST THE EXTERNAL MATERIAL TO BE USED: BRICK + TILES TO MATCH EXISTING

7. WILL PEDESTRIANS/VEHICLES ACCESS THE SITE? YES / ~~NO~~
Please show details of the existing access and any proposed changes on the plans.

8. WILL THE CAR PARKING PROVISION AT THE SITE BE CHANGED? If YES, please show details of any changes on the plans. ~~YES~~ / NO

9. DOES A PUBLIC RIGHT OF WAY TOUCH OR CROSS THE SITE? ~~YES~~ / NO
If YES, please show the route and any proposed alternative on the plans.

10. CHECK LIST Please ... the f... ng:-

(a) 6 ... gned a... ited
(b) ... ale of ... s attache
... se say ... below

(c) 6 ... wing...
... ation... ...ith appl... ion, site outlined in red.
... layou... showing ... ition of adjoining dwellings
... cale f... ...lans and ... ...vations

11. CERTIFICATE OF OW... 56 TC... AND CO... NTRY PLANNING ACT 1990)
Please delete either Ce... e B b... If neithe... ...pply you must complete a full
certificate obtainable fr... ...tmen...

CERTIFI... TE A

(a) "Owner" means a per... having a freehold int... or leasehold interest ... unexpired term of w... is not less than 7 yea...

... that:

... beginni... f the period of 21 days ending with the
... of the acc... panying application nobody, except the
... ant, was ... owner (a) of any part of the land to
... the app'... ion relates.

... of the la... forms part of an agricultural holding.

RTIFIC... E B

... that:

.../The app'... nt has * given the required notice to
... one else ... o, at the beginning of the period of 21
... ending w... the date of the accompanying application
... he owne...) of any part of the land to which the
... ation rel... s, as listed below.

's (a) na...	A... ss at which notice w... erved	Date on which notice was served

... of the lar... orms part of an agricultural holding

SIGNED ... BEHALF ... Marks Anderson

27-3-99