08.FEB.2000* 0554

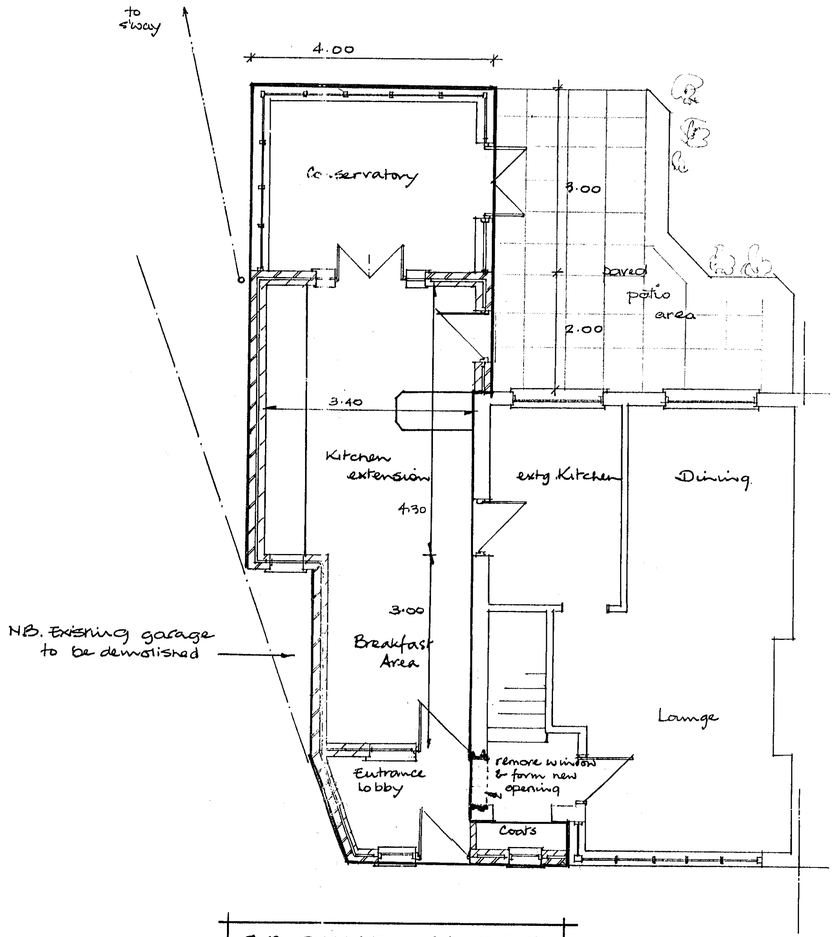

N.B. Existing garage to be demolished

GROUND FLOOR

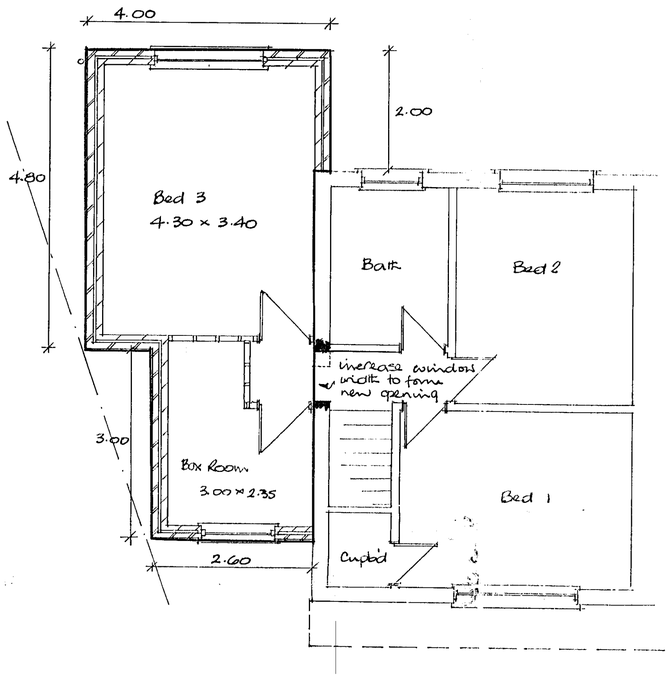

FIRST FLOOR

APPROVED

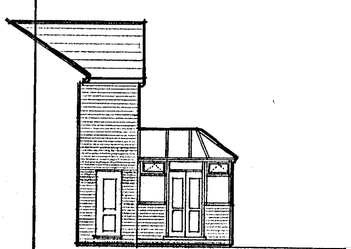

SIDE

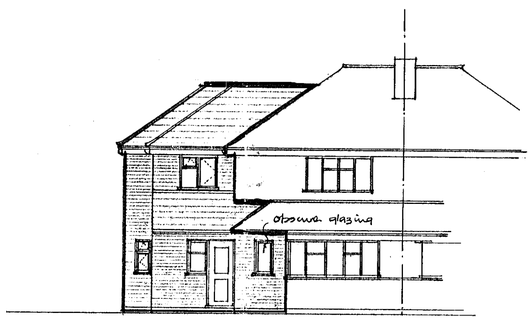

FRONT

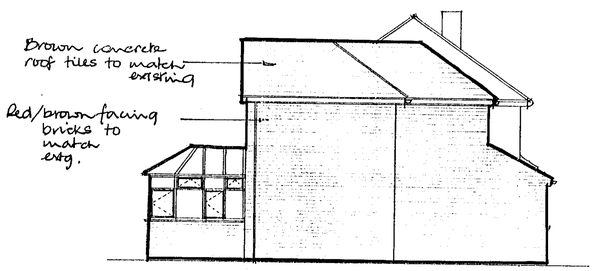

SIDE

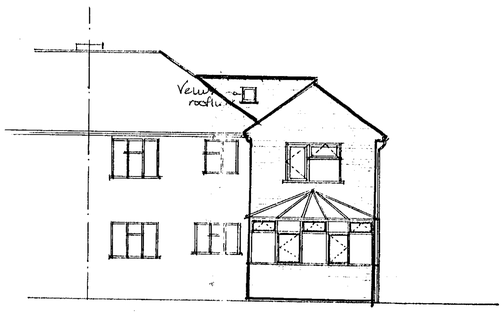

REAR

REV	DATE

PROPOSED TWO STOREY EXTENSION

SITE :-
12 DENE CLOSE
MAIDEN ERLEGH
READING

PROJECT				
TITLE				
DATE DEC '99	SCALE 1/50 1/100	DRAWN	DRG No.	REV

AARQUE AVONMOUTH 286

This drawing remains the copyright and should not be copied or reproduced without consent.

9/3/01

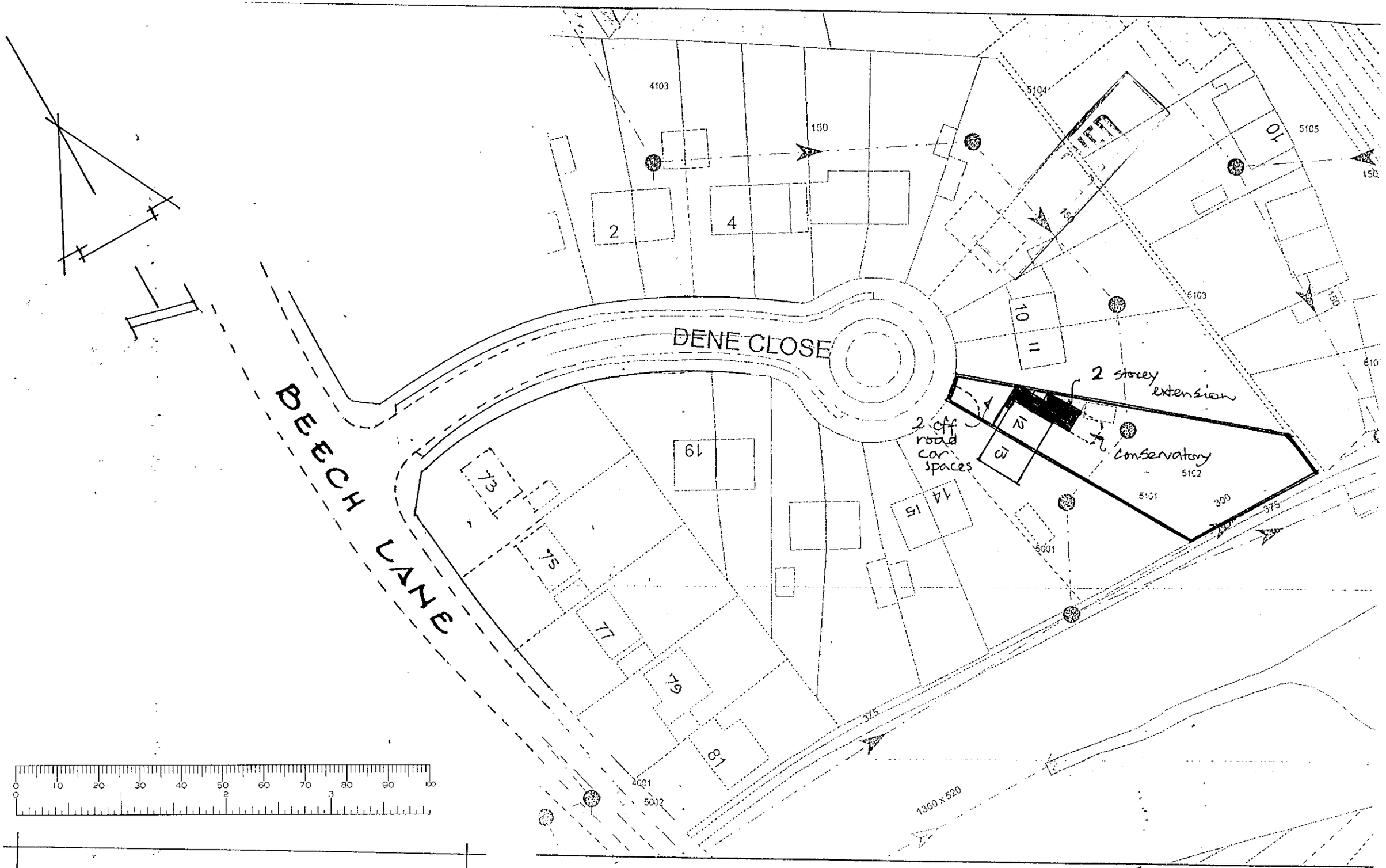

LOCATION & BLOCK PLAN OF : Nº 12 DENE CLOSE

SCALE : 1'500 JAN 2000

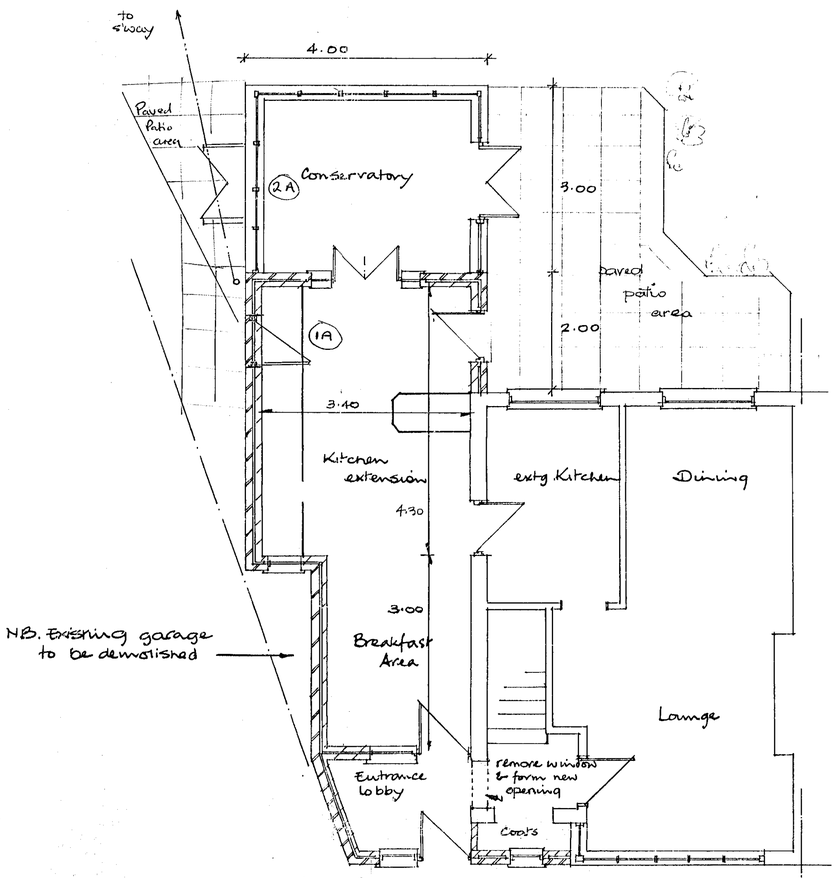

GROUND FLOOR

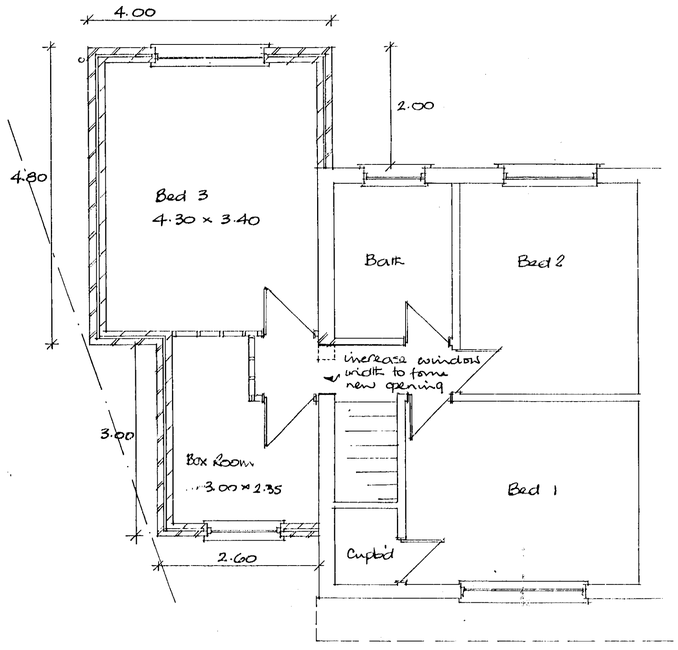

FIRST FLOOR

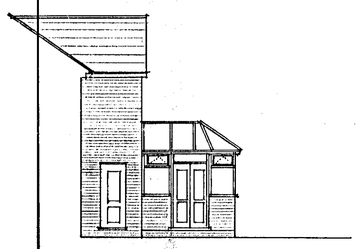

SIDE

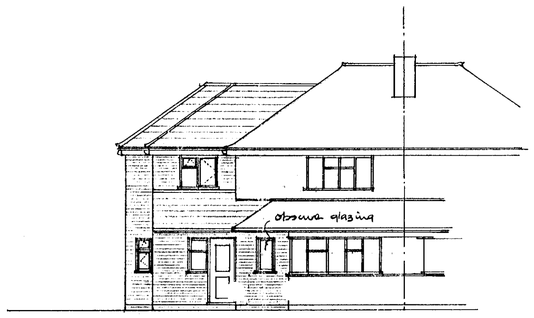

FRONT

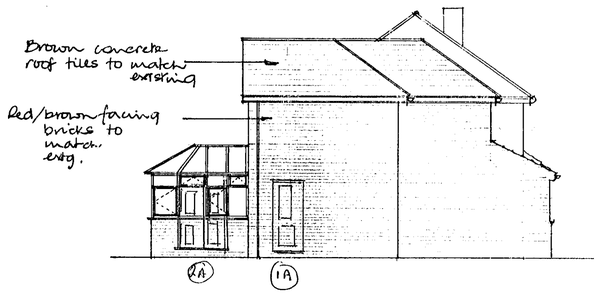

SIDE



REAR



REV | DATE

PROPOSED TWO STOREY EXTENSION

SITE :-
12 DENE CLOSE
MAIDEN ERLEGH
READING

PROJECT

TITLE

DATE	SCALE	DRAWN	DRG No.	REV
DEC '99	1/50 1/100			

This drawing remains the copy... ...ld not be copied or reproduced without consent.

AARCHIE AVONMOUTH 286