Write up cards

APPLICATION NO:
F/2000/2746

LOCATION:
13 Church Lane, Three Mile Cross Reading.

APPLICANT:
Mr & Mrs Stallion C/O Thames Valley Windows

PROPOSAL:
Proposed single storey rear extension to dwelling to form conservatory

EARLIEST DATE FOR DECISION: **08/12/2000**

APPLICATION WILL HAVE EXPIRED ON:
28/12/2000

CASE OFFICER: ~~Heather Morgan~~ George Allpress

APPROVED

RAILEX
Marbleboard

FASIFILE EP7

WOKINGHAM DISTRICT COUNCIL

TOWN AND COUNTRY PLANNING ACTS

Notification of Approval of Permission

Mr & Mrs Stallion
C/O Thames Valley Windows
Unit 44
Longshot Lane
Bracknell
Berkshire
RG42 1RL

Application Number: F/2000/2746

Parish: **SHINFIELD**

Location: **13, Church Lane, Three Mile Cross, Reading.**

Proposal: **Proposed single storey rear extension to dwelling to form conservatory**

The Wokingham District Council in pursuance of their powers under the above Acts and Regulations hereby **Approve Permission** for carrying out the above development in accordance with the application and the accompanying plans submitted to the Council subject to compliance with the following conditions, the reasons for which are specified hereunder.

Condition
1. The development hereby permitted shall be begun before the expiration of five years from the date of this permission.

Reason
1. In pursuance of Section 91(1) of the Town and Country Planning Act 1990.

Informative
1. You are advised, in compliance with The Town and Country Planning (General Development Procedure) (England) (Amendment) Order 2000, that the following policies and/or proposals in the development plan are relevant to this decision:

Berkshire Structure Plan Policy EN1.

Loddon Area Local Plan Policy LBE1.

Deposit Draft Wokingham District Local Plan Policy WBE1.

Informative

2. Whilst it would appear from the application that the proposed development is to be entirely within the curtilage of the application site, care should be taken upon the commencement and during the course of building operations to ensure that no part of the development, including the foundations, eaves and gutters, overhang will encroach on, under or over adjoining property. The applicant should also note that this permission does not give any right of access onto adjoining property for construction or maintenance purposes.

John Mitchell

John Mitchell
Development Control Manager
Date: 21/12/2000

If this notice grants permission to proceed with the proposal the applicant is reminded that it relates to planning permission only and does not constitute approval under any other legislation including Building Regulations.

**********FILE COPY**********

Tel: (0118) 974 6446

Date: **14 November 2000**

My ref: F/2000/2746

CONFIDENTIAL

Councillor Bryant
Rosebry
19 Salmond Road
Shinfield
RG2 8QN

Environmental Services Department
Planning Services
P.O. Box 157
Shute End, Wokingham
Berkshire RG40 1WR
Tel: (0118) 974 6000
Fax: (0118) 974 6484
Minicom No: (0118) 974 6991
DX: 33506 – Wokingham

Dear Councillor

Application Number: F/2000/2746
13, Church Lane, Three Mile Cross, Reading.
Proposed single storey rear extension to dwelling to form conservatory

I write to let you know that the above mentioned house holder application has been received

At this stage a recommendation has not yet been made. This form should only be returned if it is likely that you may wish the application to be listed for consideration by the Development Control Sub-Committee. This form must be received no later than 28 days from the date of this letter.

If you have any questions please do not hesitate to contact **Heather Morgan** on **(0118) 974 6446**.

Yours faithfully,

John Mitchell

John Mitchell
Development Control Manager

LISTING FORM
Case officer: **Heather Morgan** Application Number: **F/2000/2746**
13, Church Lane, Three Mile Cross, Reading.
Proposed single storey rear extension to dwelling to form conservatory
I wish this application to be listed should the officers recommendation be for_____
and my reason(s) are_____
_____
_____

Signed: _____ Date: _____
Councillor Bryant

**********FILE COPY**********

**********FILE COPY**********

Tel: (0118) 974 6446

Date: **14 November 2000**

My ref: F/2000/2746

CONFIDENTIAL

Councillor Patman
Meadow View
Basingstoke Road
Spencers Wood
Reading
RG7 1AL

Environmental Services Department
Planning Services
P.O. Box 157
Shute End, Wokingham
Berkshire RG40 1WR
Tel: (0118) 974 6000
Fax: (0118) 974 6484
Minicom No: (0118) 974 6991
DX: 33506 – Wokingham

Dear Councillor

Application Number: F/2000/2746
13, Church Lane, Three Mile Cross, Reading.
Proposed single storey rear extension to dwelling to form conservatory

I write to let you know that the above mentioned house holder application has been received

At this stage a recommendation has not yet been made. This form should only be returned if it is likely that you may wish the application to be listed for consideration by the Development Control Sub-Committee. This form must be received no later than 28 days from the date of this letter.

If you have any questions please do not hesitate to contact **Heather Morgan** on **(0118) 974 6446**.

Yours faithfully,

John Mitchell

John Mitchell
Development Control Manager

LISTING FORM
Case officer: **Heather Morgan** Application Number: **F/2000/2746**
13, Church Lane, Three Mile Cross, Reading.
Proposed single storey rear extension to dwelling to form conservatory
I wish this application to be listed should the officers recommendation be for_____
and my reason(s) are_____
_____
_____

Signed: _____ Date: _____
Councillor Patman

**********FILE COPY**********

**********FILE COPY**********

Tel: (0118) 974 6446

Date: **14 November 2000**

My ref: F/2000/2746

CONFIDENTIAL

Councillor Pollock
8 Halfacre Close
Spencers Wood
Reading
RG7 1DZ

Environmental Services Department
Planning Services
P.O. Box 157
Shute End, Wokingham
Berkshire RG40 1WR
Tel: (0118) 974 6000
Fax: (0118) 974 6484
Minicom No: (0118) 974 6991
DX: 33506 – Wokingham

Dear Councillor

Application Number: F/2000/2746
13, Church Lane, Three Mile Cross, Reading.
Proposed single storey rear extension to dwelling to form conservatory

I write to let you know that the above mentioned house holder application has been received

At this stage a recommendation has not yet been made. This form should only be returned if it is likely that you may wish the application to be listed for consideration by the Development Control Sub-Committee. This form must be received no later than 28 days from the date of this letter.

If you have any questions please do not hesitate to contact **Heather Morgan** on **(0118) 974 6446**.

Yours faithfully,

John Mitchell

John Mitchell
Development Control Manager

LISTING FORM

Case officer: **Heather Morgan** Application Number: **F/2000/2746**
13, Church Lane, Three Mile Cross, Reading.
Proposed single storey rear extension to dwelling to form conservatory
I wish this application to be listed should the officers recommendation be for_____
and my reason(s) are_____
_____
_____

Signed: _____ Date: _____
Councillor Pollock

**********FILE COPY**********

Received by Wokingham District Council

Application No: F/2000/2746

Proposal:
Proposed single storey rear extension to dwelling to form conservatory

Location:
13, Church Lane, Three Mile Cross, Reading.

The application is available for inspection at Wokingham District Council's offices during the following times:

PLANNING DEPARTMENT, SHUTE END, WOKINGHAM TEL (0118) 974 6428
8.30 - 5.00 Monday - Thursday & 8.30 - 4.00 Friday

WOODLEY LIBRARY HEADLEY ROAD WOODLEY (9.30am - 7.00pm Mon, Thurs & Fri. 9.30am - 5.00pm Tues, 9.30am - 1.00pm Saturday. closed all day Wednesday). If you intend to view this application at Woodley Library (see details above) please allow 4 days from the date of this notice for delivery of plans.

Comments should be sent in writing QUOTING THE APPLICATION NUMBER to the Case Officer Heather Morgan P.O. Box 157 Council Offices, Shute End, Wokingham Berkshire, RG40 1WR to arrive on or before 08/12/2000. Written comments submitted will become available for public inspection.

In view of the very large number of planning applications and letters of comment received, it will not normally be possible for an individual reply to observations made. However any comments will be taken into account when the application is determined and you will be notified of the decision.

Head Planning and Transportation

14 November 2000

WORK SHEET FOR: George Allpress

Application Number: F/2000/2746

Applicant: Mr & Mrs Sallion C/O Thames Valley Windows.

Location: 13 Church Lane, Three Mile Cross, Reading.

Proposal: Proposed single storey rear extension to dwelling to form a conservatory.

Site Notice Displayed? :	YES	NO	DATE
	✓yes		20/11/00

Date of Neighbour Notifications : 14/11/00

Date of Site Visit : 14/12/00

Date Registered : 02/11/2000

Earliest Date for Decision : 08/12/2000

Latest Consultation Date/Site Notice Expiry Date : 08/12/2000
11/12/00 (GA)

This application will have expired on: 28/12/2000. You need to make a decision 1 day prior to this date for this application to count as determined in less than 8 weeks.

Consultation Responses :

At the time of writing no comments have been received in response to the Council's consultation procedure.

Planning Issues : The issues addressed by this application are neighbour amenity, street scene parking and highway safety.

The following policies apply: Berkshire Structure Plan policy EN1: The Loddon Area Local Plan Policy LBE1, and Policy WBE1, of the Wokingham District Local Plan Deposit Draft 1997.

Application Number: F/2000/2746

Appraisal :

The application property is one of a small group of houses that straddle Church Lane. The property is not within a defined settlement but lies within an area that is defined as countryside.

The application property has not been previously extended. That proposed would not conflict with local plan policies intended to limit enlargement of dwellings within the countryside.

There are no street scene issues as the proposal would not be visible from the public domain and the site is largely screened form views from the open countryside by existing surrounding extensions and out buildings.

Neighbour amenity would not be impinged upon. No.12 to the west is separated from the site by a combined gap of around 7.0 metres, and no.14 to the east has a single storey rear extension at around 3.0 metres. The proposed conservatory would extend beyond no.14's extension by around 0.7 metres but this would not result in demonstrable harm.

Parking and highway safety are not at issue.

Recommendation: Approval: ☑ **Refusal:** ☐
(tick appropriate box)

Application Number: F/2000/2746

Conditions/~~Reasons for Refusal~~

No	Std Con	Std Reas	~~Non-Std Conditions / Reasons for Refusal~~
1	C001	R001	FULL PERMISSION - 5 YEARS
			INFORMATIVE
1	N16		INSERT: Berkshire Structure Plan policy EN1: The Loddon Area Local Plan Policy LBE1, and Policy WBE1, of the Wokingham District Local Plan Deposit Draft 1997.
2	N06		WITHIN CURTILAGE

21/12/00

RECORD OF SITE VISIT

SITE ADDRESS: 13 Church Lane, Three Mile Cross, Reading.

APPLICATION NUMBER: F/2000/2746

OFFICER: George Allpress

DATE OF SITE VISIT: 14/12/00

1. SITE/STATUTORY NOTICE DISPLAYED? Yes

2. DESCRIPTION OF SURROUNDINGS Small group of residential dwellings within rural area.

3. DESCRIPTION OF SITE/BUILDING Mid terrace single family dwelling.

4. RELATIONSHIP TO ADJOINING PROPERTIES No.14 to the east, no.12 to the west.

5. SITE CONSTRAINTS

TREES	No trees in the vicinity of the proposed extension.
ACCESS/PARKING	As existing.
LEVELS	Level.
BOUNDARY TREATMENT	Timber fencing
OTHERS	None

THAMES VALLEY WINDOW COMPANY

A TRUE REFLECTION OF QUALITY

PLANNING	37221
POL	ITS
DC	EGA
APP	
CS	
30 NOV 2000	
COPIES TO:	ACK:
	FILE:

John Mitchell
Development Control Manager
Environmental Services Dept
Planning Services
PO Box 157
Shute End
Wokingham
Berks
RG40 1WR

27 November 2000

Your Ref: Heather Morgan – F/2000/2746

Dear Mr Mitchell

Re: Application Number F/2000/2746

Site Address: 13 Church Lane Three Mile cross Reading

Thank you for your recent letter.

I would like to confirm that the above property does not encroach onto, over or under the neighbouring property.

With thanks

Yours sincerely

p/p

Mark Schofield
Managing Director

THE SCHOFIELDS GROUP PLC
UNIT 44, LONGSHOT LANE, BRACKNELL, BERKSHIRE RG42 1RL
TELEPHONE: (01344) 869400 FACSIMILE: (01344) 427999
WEBSITE: www.tvwindows.com EMAIL: info@tvwindows.com

REGISTERED OFFICE: 3 HILLCROFT AVENUE, PURLEY, SURREY, CR8 3DJ. REGISTERED No. 1888124 VAT No. 491 8602 25

A MEMBER OF THE GLASS AND GLAZING FEDERATION

GA ~~HAA~~

1792

I have today displayed the site notice(s) in a prominent position on the land/ buildings to which the application number F/2000/2746 relates.

Address of site 13 CHURCH LANE, THREE MILE CROSS, READING

Signed [signature]

Date 20/11/00

DC	
DC	RG & IHB
APP	
CS	
28 NOV 2000	
COPIES TO:	ACK:
	FILE:

Postage
will be paid
by licensee

Do not affix Postage Stamps if posted in
Gt Britian, Channel Islands, N. Ireland
or the Isle of Man

Business reply service
License no. RG147

1

Planning Services
Environmental Services Department
Wokingham District Council
Council Offices
Shute End
Wokingham
Berkshire RG40 1BR

WOKINGHAM D.C. DEVELOPMENT CONTROL

Start date:	02 NOV 2000
Officer: HM	Application No. F/2000/2746

Map No. 72. Site 0.04.....
Easting: ..... Flood Pln .....
Northing: ..... Mineral .....

Level: ☐ Sub Committee ☑ Delegated ☐ Sec. State
☐ Incorrect Fee ☐ Invalid ☐ PD

Description:
(F.) PROPOSED SINGLE STOREY REAR EXTENSION TO DWELLING TO FORM CONSERVATORY

Location: 13 CHURCH LANE

Parish: SHINFIELD Ward: SHINFIELD
14-11-00

Applicant: MR/MRS STALLION

Fee Received 95-00 Required ..... Additional ..... Refund .....

Enforcement Section (3) to be notified ☐ tick if required

Additional information required for validation

		Reason	Requested	Received
1	1:2500 OS location plan showing property edged in blue/red			
(2)	1:500 block plan showing existing & proposed dev. + adj. Properties			
3	Forms unsigned			
4	Correct S 66 certificate			
(5)	Elevation plans	Other side elevation	14.11.00	
6	Floor plans			
7	Metric scale disclaimer			
8	Encroachment letter	Encroachment ?	14.11.00	
9	Miscellaneous			

APPLN NO. _____

ACTION REQUIRED BY DEVELOPMENT CONTROL

Conservation Area .....

Listed Building 1 2 2*

Advertisement Required .....

Date Site Notice Sent : 14.11.00 Parish Council Informed - YES / NO

INTERNAL CONSULTATIONS

Building Control .....
Landscape .....
Trees .....
Conservation Officer .....
Environmental Health .....
Housing .....
Leisure & Cultural services .....
Public Rights of Way .....
Property .....
District Secretary (only if called in by SOS) .....
Policy & Plans .....
Strategic Planning (JSPU) .....
Minerals (INTERNAL) .....
Archaeological Site (BABTIE) : .....
Education .....
Social Services .....
Highways .....

EXTERNAL CONSULTATIONS

Adjacent D P A : .....
Adjacent Parish : .....
Southern Electricity Board .....
British Gas .....
PSA Oil Pipeline .....
Transco : .....
Environment Agency .....

Rail Track .....
Police Arch. Liaison Officer .....

HERITAGE BODIES

The Georgian Group .....
Ancient Monuments Society .....
Council for British Arch. .....
RCHME .....
Telecommunications (NRPB) : .....
Sport England : .....

OTHERS:

no pre-apps.
.....
Rural Area

NEIGHBOURS:

S/N + 12 + 14 } Church Lane ✓
The Grove }

Environmental Services

For office use only. Application number:

Householder planning application form

Please answer all questions in CAPITAL letters.
If any question does not apply to you, put N/A in the space.
Please send six copies of the filled in form and your plans to the address on the front of the folder.
We provide guidance notes to help you fill in the form. If you have any questions, please call Planning Support on 0118 974 6428 or 0118 974 6429.

1	Your name	MR & MRS STALLION
	Address and postcode	13 CHURCH LANE 3 MILE CROSS READING BERKS RG7 1HB
	02.NOV.2000* 2746	
	Phone number	0118 988 7393
2	Agent's Name	THAMES VALLEY WINDOWS
	Address and postcode	UNIT 44 LONGSHOT LANE BRACKNELL BERKS RG12 1RL
	Phone number	01344 869400
3	Site We need you to send in six copies of the 1:2500 scale location plan and six copies of the 1:500 scale block plan, with the site outlined in red. You can buy these maps from the Environmental Services reception or order them by phoning 0118 974 6485.	AS ABOVE 6x 1:2500 6x 1:500 6x ELEVATION DRAWINGS
4	Give brief details of the proposal for example, two storey side extension. About the application	ERECTION OF A CONSERVATORY

5	Are there any trees on the site? If Yes, please show their positions, spread and species of the trees on the plans. Say which trees you plan to cut down.	Yes ☐	No ☑
6	Please list the external materials you will use for example, red brick to match any existing bricks and dark stained timber.	UPVC CONSERVATORY WITH POLYCARBONATE ROOF MATCH EXISTING BRICKWORK	
7	Will the proposal change the pedestrian or vehicle access to the site? Please show details of the existing access and any proposed changes on the plans.	Yes ☐	No ☑
8	Will the car parking provision at the site be changed? If Yes, please show details of any changes on the plans.	Yes ☐	No ☑

3544 Crystal Mark
Clarity approved by Plain English Campaign

Please turn over

9	How many bedrooms does the property have?	Existing: ✓	Proposed:
10	Does a public right of way touch the site? If yes, please show the route and any proposed alternative on the plans.	Yes ☐	No ☐ ✓
11	Checklist. Please make sure that you enclose the following.		
	a Six copies of this form signed and dated.		
	b The fee (We have attached a current scale of fees). If you do not have to pay a fee, please say why below.		
	c Six copies of each set of plans and drawings listed below.		
	• 1:2500 scale location plan with the site outlined in red.		
	• 1:500 scale site layout plan.		
	• 1:100 or 1:200 scale floor plans and elevations.		

12 Certificate of ownership (Section 66 Town & Country Planning Act 1990)
Please delete either certificate A or certificate B. If neither apply, you must fill in a full certificate which you can get from Environmental Services.

(Owner means a person with a freehold interest, or someone who is a leasehold tenant with at least seven years left on their agreement)

Certificate A

I certify that

- At the beginning of the period of 21 days ending with the date of the application nobody, except the applicant, owned any part of the land which the application relates to.
- None of the land forms part of an agricultural holding.

Certificate B

I certify that

- I or the applicant has given the necessary notice to everyone else who (at the beginning of the period of 21 days ending with the date of the application) owned any part of the land which the application relates to as listed below.

Owner's name	Address at which the notice was served	Date on which the notice was served

~~None of the land forms part of an agricultural holding.~~

Your signature: Judy Stapler

on behalf of THAMES VALLEY WINDOWS

Date 31-10-00

Please tick this box if you or your husband, wife or partner are employed by Wokingham District Council ☐

ADDRESS 13 CHURCH LANE PARISH SHINFIELD

PLOT No. Old Property. ORD. SHEET No. SU 7268

BUILDER

Plan No.	Applicant	Description of Development	Date of Decision	Decision
234/52	Mr E. J. Page	Garage	2.5.52	App
BR 21166	MR. A. FARLEY	ROOF SLATES TO TILES	28.7.88	App N/A
33319			38.89	Ch
BRA 7116	MR. J. ABRAM	2/St. Ht.	6.4.89	App

DATE OF COMPLETION

MINISTRY DECISION

SPECIAL ORDERS

DRAINAGE

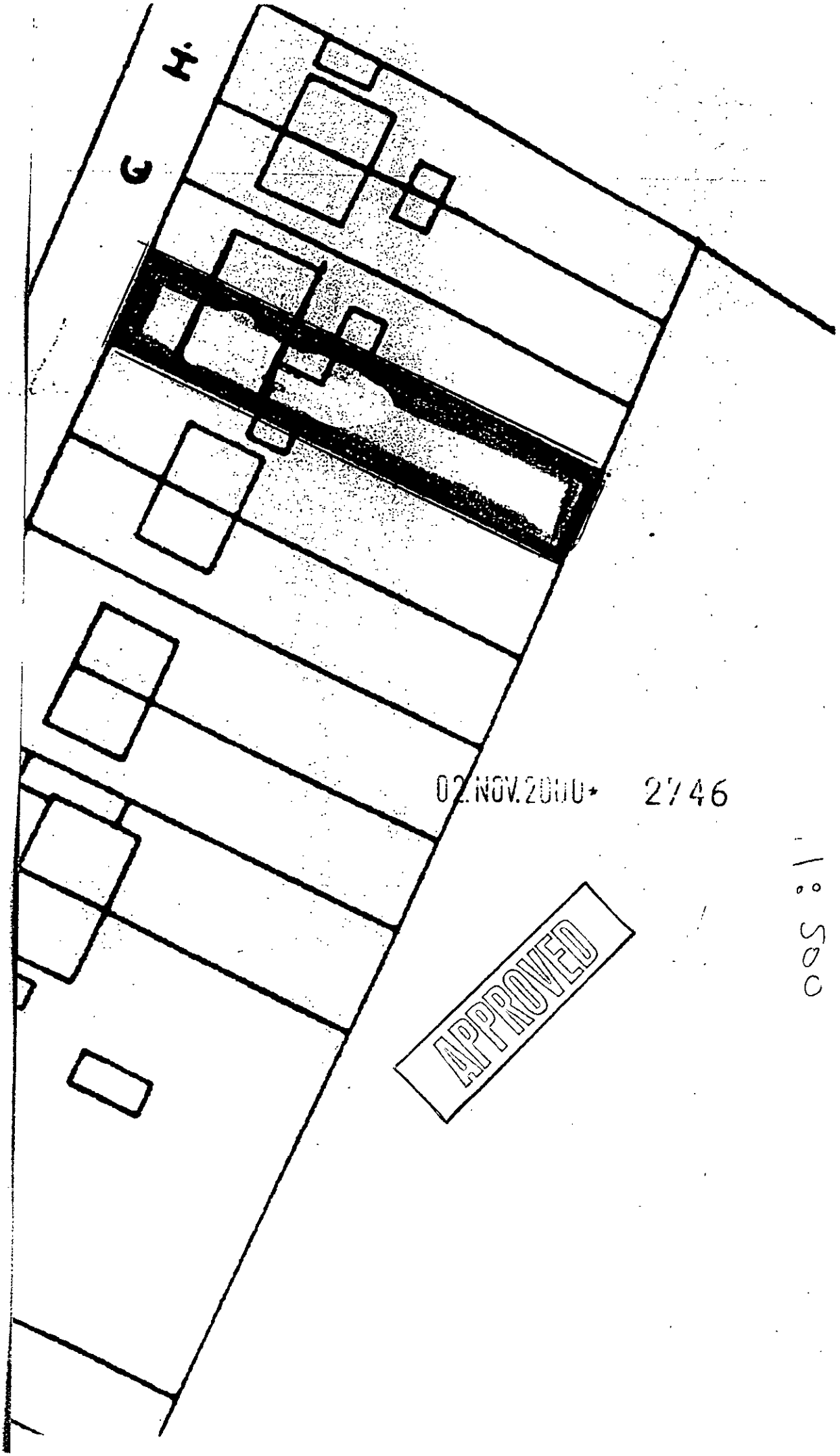

02.NOV.2000 2746

1:500



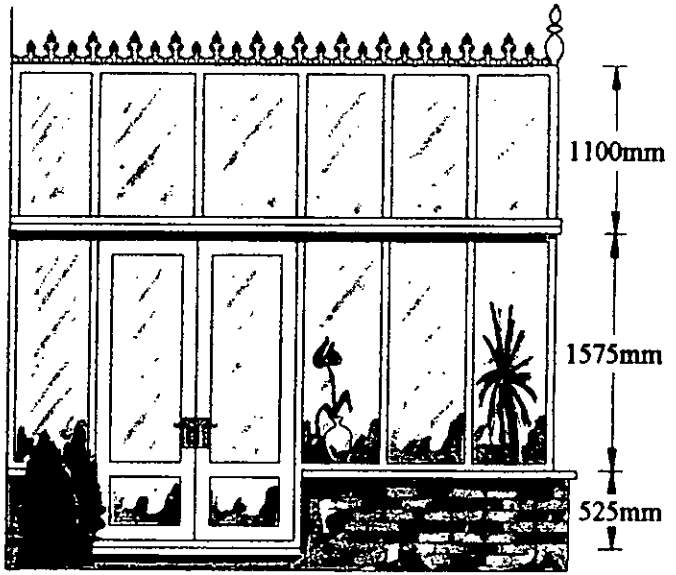

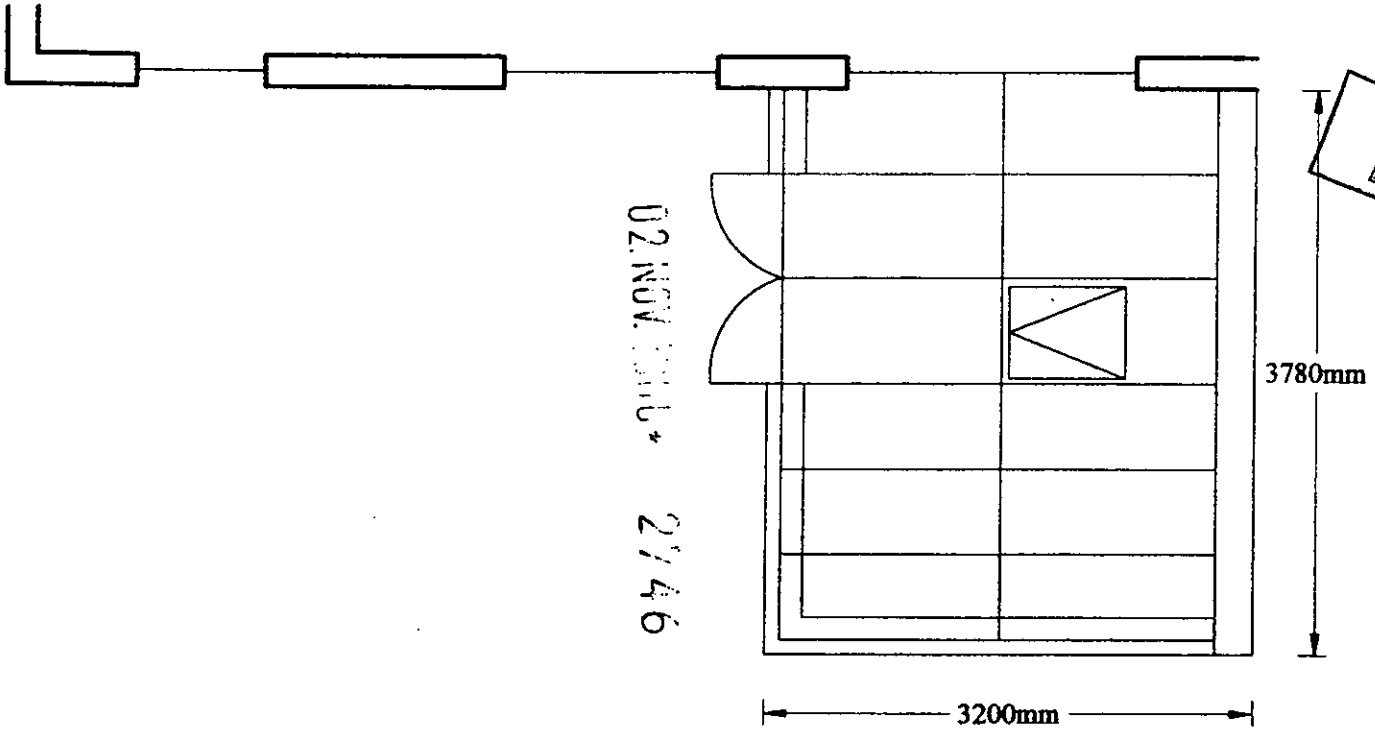

APPROVED

Mr & Mrs Stallion
13 Church Lane
Three Mile Cross
Reading
Berkshire

Thames Valley Window Company
Designed by Shaun Newbold
Scale 1:50
12th October 2000

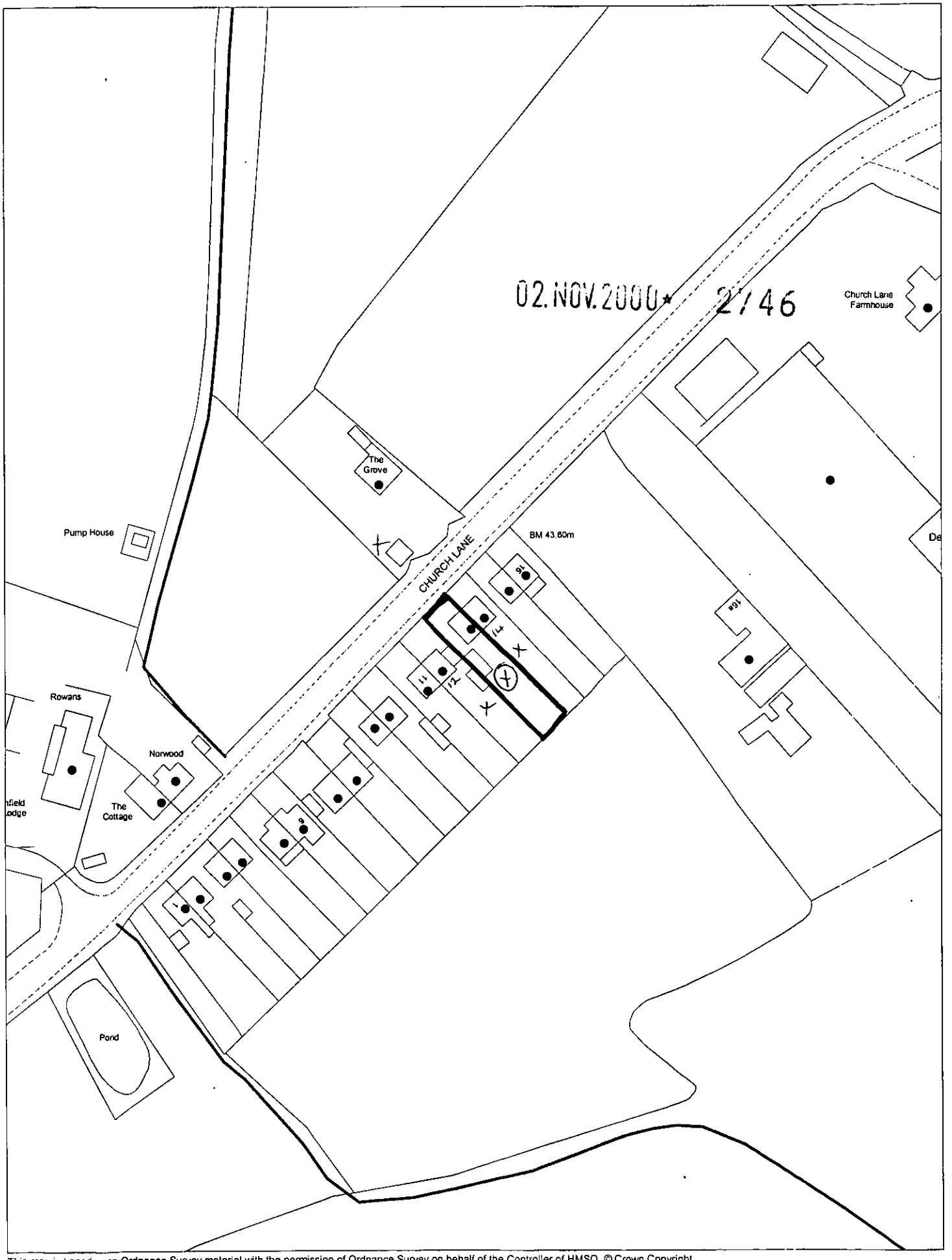

This map is based upon Ordnance Survey material with the permission of Ordnance Survey on behalf of the Controller of HMSO. © Crown Copyright.
Unauthorised reproduction infringes Crown Copyright and may lead to prosecution or civil proceedings.Wokingham District Council Licence LA086134

Development Control Section, Environmental Services, Wokingham District Council.

9 November 2000

Scale: 1 : 1250

N W E S

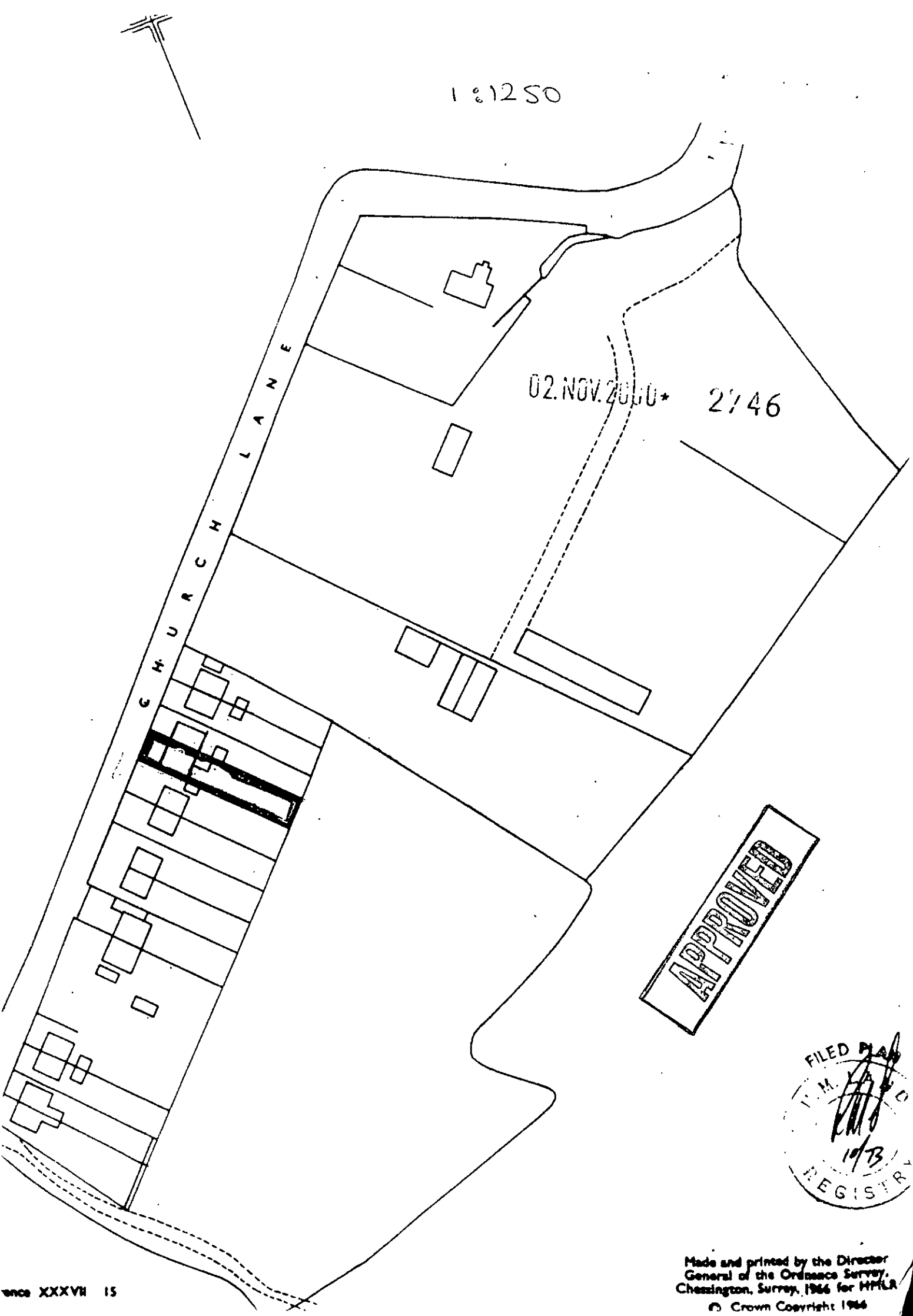

Made and printed by the Director General of the Ordnance Survey, Chessington, Surrey, 1966 for HMLR

© Crown Copyright 1966

ence XXXVII 15