APPLICATION NO:
F/2000/1480

LOCATION:
80 Wargrave Road, Twyford Reading.

APPLICANT:
P E Dunster

PROPOSAL:
Proposed single storey rear extension to dwelling to form conservatory.

EARLIEST DATE FOR DECISION: **16/06/2000**

APPLICATION EXPIRY DATE: **05/07/2000**

CASE OFFICER: **Andrew Thorley**

RAILEX
Marbleboard

WOKINGHAM DISTRICT COUNCIL

TOWN AND COUNTRY PLANNING ACTS

Notification of Approval of Permission

P E Dunster
80 Wargrave Road
Twyford
Reading
RG10 9PJ

Application Number: F/2000/1480

Parish: **TWYFORD**

Location: **80, Wargrave Road, Twyford, Reading.**

Proposal: **Proposed single storey rear extension to dwelling to form conservatory.**

The Wokingham District Council in pursuance of their powers under the above Acts and Regulations hereby **Approve Permission** for carrying out the above development in accordance with the application and the accompanying plans submitted to the Council subject to compliance with the following conditions, the reasons for which are specified hereunder.

Condition
1. The development hereby permitted shall be begun before the expiration of five years from the date of this permission.

Condition
2. All new external work shall be carried out in materials that resemble in size, colour and texture, those of the existing building.

Condition
3. No soakaways shall be constructed such that they penetrate the water table and they shall not in any event exceed 3.0 metres in depth below existing ground level.

Reason
1. In pursuance of Section 91(1) of the Town and Country Planning Act 1990.

Reason
2. To ensure a satisfactory external appearance.

Reason

3. To prevent pollution of groundwater.

Informative

Under the terms of the Water Resources Act 1991, the prior written consent of the Environment Agency is currently required for any discharge of sewage or trade effluent onto or into ground and for surface runoff into groundwater. Such consent may be withheld. If there is an existing discharge consent the applicant should ensure that any increase in volume is permitted under the present conditions. Contact Andrea Szabasos on 01276 454 373 for further details.

John Mitchell
Development Control Manager
Date: 21/06/2000

If this notice grants permission to proceed with the proposal the applicant is reminded that it relates to planning permission only and does not constitute approval under any other legislation including Building Regulations.

Received by Wokingham District Council

Application No: F/2000/1480

Proposal:
Proposed single storey rear extension to dwelling to form conservatory.

Location:
80, Wargrave Road, Twyford, Reading.

The application is available for inspection at Wokingham District Council's offices during the following times:

PLANNING DEPARTMENT, SHUTE END, WOKINGHAM TEL (0118) 974 6428
8.30 - 5.00 Monday - Thursday & 8.30 - 4.00 Friday

WOODLEY LIBRARY HEADLEY ROAD WOODLEY (9.30am - 7.00pm Mon, Thurs & Fri. 9.30am - 5.00pm Tues, 9.30am - 1.00pm Saturday. closed all day Wednesday). If you intend to view this application at Woodley Library (see details above) please allow 4 days from the date of this notice for delivery of plans.

Comments should be sent in writing QUOTING THE APPLICATION NUMBER to the Case Officer Andrew Thorley P.O. Box 157 Council Offices, Shute End, Wokingham Berkshire, RG40 1WR to arrive on or before 16/06/2000. Written comments submitted will become available for public inspection.

In view of the very large number of planning applications and letters of comment received, it will not normally be possible for an individual reply to observations made. However any comments will be taken into account when the application is determined and you will be notified of the decision.

Head Planning and Transportation

23 May 2000

WORK SHEET FOR : Andrew Thorley

Application Number : F/2000/1480

Applicant : P E Dunster .

Location : 80, Wargrave Road, Twyford, Reading.
Proposal : Proposed single storey rear extension to dwelling to form conservatory.

Site Notice Displayed ? :

YES	NO	DATE
✓		6/6/2000

Date of Neighbour Notifications : ✓

Date of Site Visit : 6/6/2000

Date Registered : 10/05/2000

Earliest Date for Decision : 16/06/2000

Latest Consultation Date/Site Notice Expiry Date : 16/06/2000

Application Expiry Date: 05/07/2000

Consultation Responses :
Environmental Health Officer : No objections
Neighbours : None received
Twyford Parish Council : No comment

Planning Issues : (identified settlement)
1) Impact to neighbouring properties
2) Impact to the street scene.

20/6/2000

Application Number: F/2000/1480

Appraisal :

1) Impact upon neighbouring properties

The proposed development is for a single storey rear extension to dwelling to form a conservatory. It will be 3.9m wide and protrude 4.2m from the rear of the house, 2.6m approx to the eaves and 3.1m to the ridge of the roof. The entire rear garden is bounded by a 1.8m fence with 5m high conifer trees and the garage walls of No 80.

The proposed conservatory will not cause any overlooking, overshadowing or be overbearing to neighbouring properties ∴ no detrimental impact.

2) Impact to the street scene

Materials will match existing, ∴ no detrimental impact to the street scene.

Recomendation : Approval: ☑ **Refusal:** ☐
(tick appropriate box)

Application Number F/2000/1480
Conditions/~~Reasons for Refusal~~

No	Std Con	Std Reas	Non Std Conditions / ~~Reasons for Refusal~~
1.	SC01	SR02	
2.	SC53	SR12	INSERT: 'WORK'

3. **CONDITION:** No soakaways shall be constructed such that they penetrate the water table, and they shall not in any event exceed 3.0 metres in depth below existing ground level.

3. **REASON:** To prevent pollution of groundwater.

PLANNING INFORMATIVES

The following planning informatives should be attached to any planning permission granted:

Under the terms of the Water Resources Act 1991, the prior written consent of the Environment Agency is currently required for any discharge of sewage or trade effluent onto or into ground and for surface runoff into groundwater. Such consent may be withheld. If there is an existing discharge consent the applicant should ensure that any increase in volume is permitted under the present conditions. Contact Andrea Szabasos on 01276 454 373 for further details.

John Mutton
21/6/02

RECORD OF SITE VISIT

SITE ADDRESS: 80 Wargrave Road Twyford Reading.

APPLICATION NUMBER: F/2000/1480

OFFICER: Andrew Thorley

DATE OF SITE VISIT: 6/6/2000

1 SITE/STATUTORY NOTICE DISPLAYED ? Yes on front fence

2. DESCRIPTION OF SURROUNDINGS Mix designs + styles, 1930's. Residential, detached houses with their own attached garages, large gardens + driveways front Wargrave Road 2 storey houses

3. DESCRIPTION OF SITE/BUILDING Extended [illegible] 2 storey, detached house, cream [illegible] white [illegible] [illegible] [illegible] French [illegible] [illegible] [illegible] frame

4. RELATIONSHIP TO ADJOINING PROPERTIES

Refer to site/location plan.

5. SITE CONSTRAINTS

TREES — None / only grape vine.

ACCESS/PARKING — As existing at front ~~no~~ side access ~~only~~ through garage and on north side of house.

LEVELS — No change

BOUNDARY TREATMENT — 80a, 1.8m high close boarded fence with eaves height 'thuja' trees along boundary.

OTHERS — 78, completely hidden by garage + outbuildings of No 80 at side, no windows in flank elev of No 78.

— Rear boundary, eaves height 'thuja' trees / hedge along entire boundary.

Nb Herongate is to be demolished + rebuilt.

**********FILE COPY**********

Tel:

Date: **23 May 2000**

My ref: F/2000/1480

CONFIDENTIAL

Councillor Conway
20 Arnside Close
Twyford
RG10 9BS

Environmental Services Department
Planning Services
P.O. Box 157
Shute End, Wokingham
Berkshire RG40 1WR
Tel: (0118) 974 6000
Fax: (0118) 974 6484
Minicom No: (0118) 974 6991
DX: 33506 – Wokingham

Dear Councillor

Application Number: F/2000/1480
80, Wargrave Road, Twyford, Reading.
Proposed single storey rear extension to dwelling to form conservatory.

I write to let you know that the above mentioned house holder application has been received

At this stage a recommendation has not yet been made. This form should only be returned if it is likely that you may wish the application to be listed for consideration by the Development Control Sub-Committee. This form must be received no later than 28 days from the date of this letter.

If you have any questions please do not hesitate to contact **Andrew Thorley** on .

Yours faithfully,

John Mitchell

John Mitchell
Development Control Manager

LISTING FORM

Case officer: **Andrew Thorley** Application Number: **F/2000/1480**
80, Wargrave Road, Twyford, Reading.
Proposed single storey rear extension to dwelling to form conservatory.
I wish this application to be listed should the officers recommendation be for_____
and my reason(s) are_____
_____
_____

Signed: _____ Date: _____
Councillor Conway

**********FILE COPY**********

**********FILE COPY**********

Tel:

Date: **23 May 2000**

My ref: F/2000/1480

CONFIDENTIAL

Councillor C A Ferris
The Corner House
Station Road
Twyford
RG10 9NG

Environmental Services Department
Planning Services
P.O. Box 157
Shute End, Wokingham
Berkshire RG40 1WR
Tel: (0118) 974 6000
Fax: (0118) 974 6484
Minicom No: (0118) 974 6991
DX: 33506 – Wokingham

Dear Councillor

Application Number: F/2000/1480
80, *Wargrave Road, Twyford, Reading.*
Proposed single storey rear extension to dwelling to form conservatory.

I write to let you know that the above mentioned house holder application has been received

At this stage a recommendation has not yet been made. This form should only be returned if it is likely that you may wish the application to be listed for consideration by the Development Control Sub-Committee. This form must be received no later than 28 days from the date of this letter.

If you have any questions please do not hesitate to contact **Andrew Thorley** on .

Yours faithfully,

John Mitchell

John Mitchell
Development Control Manager

LISTING FORM

Case officer: **Andrew Thorley** Application Number: **F/2000/1480**
80, Wargrave Road, Twyford, Reading.
Proposed single storey rear extension to dwelling to form conservatory.
I wish this application to be listed should the officers recommendation be for_____
and my reason(s) are_____
_____
_____

Signed: _____ Date: _____
Councillor C A Ferris

**********FILE COPY**********

**********FILE COPY**********

Tel:

Date: **23 May 2000**

My ref: F/2000/1480

CONFIDENTIAL

Councillor Tomlin
3 Swanscourt
Twyford
Berks
RG10 0AZ

Environmental Services Department
Planning Services
P.O. Box 157
Shute End, Wokingham
Berkshire RG40 1WR
Tel: (0118) 974 6000
Fax: (0118) 974 6484
Minicom No: (0118) 974 6991
DX: 33506 – Wokingham

Dear Councillor

Application Number: F/2000/1480
80, Wargrave Road, Twyford, Reading.
Proposed single storey rear extension to dwelling to form conservatory.

I write to let you know that the above mentioned house holder application has been received

At this stage a recommendation has not yet been made. This form should only be returned if it is likely that you may wish the application to be listed for consideration by the Development Control Sub-Committee. This form must be received no later than 28 days from the date of this letter.

If you have any questions please do not hesitate to contact **Andrew Thorley** on .

Yours faithfully,

John Mitchell

John Mitchell
Development Control Manager

LISTING FORM

Case officer: **Andrew Thorley** Application Number: **F/2000/1480**
80, Wargrave Road, Twyford, Reading.
Proposed single storey rear extension to dwelling to form conservatory.
I wish this application to be listed should the officers recommendation be for_____
and my reason(s) are_____
_____
_____

Signed: _____ Date: _____
Councillor Tomlin

**********FILE COPY**********

WOKINGHAM D.C. DEVELOPMENT CONTROL

Start date:	16 MAY 2000
Officer: AT	Application No. F/2000/1480

Map No. 29 Site 0.010
Easting: ..... Flood Pln .....
Northing: ..... Mineral .....

Level: ☐ **Sub Committee** ☑ **Delegated** ☐ **Sec. State**
☐ **Incorrect Fee** ☐ **Invalid** ☐ **PD**

Description:
(F) PROPOSED SINGLE STOREY REAR EXTENSION TO DWELLING TO FORM CONSERVATORY

Location: 80 WARGRAVE ROAD

Parish: TWYFORD Ward: Twyford & Ruscombe
23.5.2000

Applicant: P DUNSTER

Fee Received 95-00 Required ..... Additional ..... Refund .....
(13)

Enforcement Section to be notified ☐ tick if required

Additional information required for validation

		Reason	Requested	Received
1	1:2500 OS location plan showing property edged in blue/red			
2	1:500 block plan showing existing & proposed dev. + adj. Properties			
3	Forms unsigned			
4	Correct S 66 certificate			
5	Elevation plans			
6	Floor plans			
7	Metric scale disclaimer			
8	Encroachment letter			
9	Miscellaneous			

APPLN NO. _____

ACTION REQUIRED BY DEVELOPMENT CONTROL

Conservation Area .....

Listed Building 1 2 2*

Advertisement Required .....

Date Site Notice Sent : 23.5.2002 Parish Council Informed - YES / NO

INTERNAL CONSULTATIONS

Building Control	NF: .....
Landscape	NK: .....
Trees	NK: .....
Conservation Officer	NK: .....
Environmental Health	NA: 250m Landfill
Housing	NA: .....
Leisure & Cultural services	PA: .....
Public Rights of Way	PA: .....
Property	NG: .....
District Secretary (only if called in by SOS)	MA: .....
Policy & Plans	QA: .....
Strategic Planning (JSPU)	HA: .....
Minerals (BABTIE)	GA: .....
Archaeological Site (BABTIE)	: .....
Education	AP: .....
Social Services	BT: .....
Highways	XA: .....

EXTERNAL CONSULTATIONS

Adjacent D P A	: .....
Adjacent Parish	: .....
Southern Electricity Board	BN: .....
British Gas	BM: .....
PSA Oil Pipeline	BD: .....
Transco	: .....
Environment Agency	BP: ..... ✓
Rail Track	BI: .....
Police Arch. Liaison Officer	PC: .....

HERITAGE BODIES

The Georgian Group	KC: .....
Ancient Monuments Society	KA: .....
Council for British Arch.	KB: .....
RCHME	KF: .....
Telecommunications (NRPB)	: .....
Sport England	: .....

OTHERS:

no pre-apps

NEIGHBOURS:

S/N + 78, 79, 80A + 81 Wargrave Rd
Kerongate - Longfield Rd.

Our ref: SP\2000\001810\001
Your ref: F/2000/1480

Date: 15th June 2000

ENVIRONMENT AGENCY

District Planning Officer
Wokingham District Council
Council Offices,
Shute End,
Po Box 157
Wokingham
Berkshire
RG11 1BN

PLANNING SERVICES	HPI
POL	LS
DC AT	
APP	
CS	30794
21 JUN 2000	
COPIES TO:	ACK:

Dear Sir/Madam

REAR EXTENSION TO FORM CONSERVATORY
80 WARGRAVE ROAD, TWYFORD

Thank you for your letter dated 23 May 2000 which was received on 25 May 2000. You are asked to quote the following reference in any correspondence: SU77NE/9/29.The Environment Agency has the following comments:

The Environment Agency has no objection, in principle, to the proposed development provided that the following conditions are imposed on any planning permission granted:

PLANNING CONDITIONS

CONDITION: No soakaways shall be constructed such that they penetrate the water table, and they shall not in any event exceed 3.0 metres in depth below existing ground level.
REASON: To prevent pollution of groundwater.

PLANNING INFORMATIVES

The following planning informatives should be attached to any planning permission granted:

Under the terms of the Water Resources Act 1991, the prior written consent of the Environment Agency is currently required for any discharge of sewage or trade effluent onto or into ground and for surface runoff into groundwater. Such consent may be withheld. If there is an existing discharge consent the applicant should ensure that any increase in volume is permitted under the present conditions. Contact Andrea Szabasos on 01276 454 373 for further details.

ADVICE TO PLANNING AUTHORITY

FLOODING/LAND DRAINAGE: CONTACT AMANDA REED ON 01276 454329

I have no record of any past flooding at this site. However, enquiries should be made of local sources for any flooding information they may be able to provide. If some evidence is produced in this way you may wish to contact me again so that I can advise accordingly.

We are not aware of any watercourses on the site, but should there be any, we advise that:
(1) they should not be culverted; and
(2) a buffer zone is left on either side of any watercourse, and
(3) a buffer zone is left on either side of any watercourse, and

Cont/d..

Environment Agency
Swift House, Frimley Business Park, Frimley, Camberley, Surrey GU16 5SQ
Telephone : 01276 454300 Fax : 01276 454301

(4) culverted watercourses should not be built over, but should ideally be opened up and made a feature of the site.

In any case, you should note that culverting of a watercourse requires the prior written approval of the local authority under the terms of the Public Health Act 1936, and the prior written consent of the Environment Agency under the terms of the Land Drainage Act 1991/Water Resources Act 1991. The Agency seeks to avoid culverting, and its consent for such works will normally be withheld.

ENVIRONMENTAL PROTECTION:; CONTACT MIRANDA WYCHERLEY ON 01276 454 384

According to our records, there are 1 landfill sites within 250 metres of the site, as follows:

Grid reference	Distance from site	Landfill name	Details
SU 788 765	40 metres north	King George's Field	Household waste in 1950s

There is therefore a potential risk of the presence of landfill gas. The applicant is advised to commission a landfill gas risk assessment from a specialist consultant. Based on this assessment, there may be a need to incorporate certain precautionary measures into the design of the building.

ADVICE TO APPLICANT

GROUNDWATER PROTECTION : CONTACT ANDREA SZABADOS ON 01276 454373

Surface water from hard surfaced areas should discharge via deep seal trapped gullies incorporating a minimum water seal of 85mm or similar.

Roof water downpipes should be connected to the drainage system either directly, or by means of back inlet gullies provided with sealing plates instead of open gratings.

All sewage or trade effluent should be discharged to the foul sewer if available subject to the approval of Thames Water Utilities or its sewerage agent.

DECISION NOTICE

Would you please forward a copy of the decision notice to this office quoting our reference.
A copy of this letter has been sent to the applicant/agent. If you have any further queries please do not hesitate to contact myself on 01276 454 323, quoting the reference cited at the beginning of this letter.

Yours faithfully

SARAH PAXMAN
PLANNING LIAISON OFFICER

CC: P.E. Dunster, The Haven, 80 Wargrave Road, Twyford, Reading RG10 9PJ

FROM: Andrew Thorley

DATE: 23 May 2000

TWYFORD PARISH CONSULTATION SHEET

Application Number: F/2000/1480

Proposal: Proposed single storey rear extension to dwelling to form conservatory..

Site Address: 80, Wargrave Road, Twyford, Reading.

Applicant: P E Dunster .

Your observations are required in respect of this application **by 16/06/2000** ..

No Comment.

SIGNED: _____ DATE: 10-6-00

Clerk To Twyford Parish/Town Council.

WOKINGHAM DISTRICT COUNCIL

MEMORANDUM

From: Joanne Ellis, Environmental Health — My Ref: JPE/JS

To: Andrew Thorloey, Planning — Your Ref:

Date: 31 May, 2000

APPLICATION NO: F/2000/1480
PROPOSED SINGLE STOREY REAR EXTENTION TO DWELLING TO FORM CONSERVATORY
LOCATION: 80 WARGRAVE ROAD TWYFORD

These proposals have been evaluated and I have no environmental health objections to the application.

Joanne Ellis
Senior Environmental Health Officer

Environmental Services

For office use only.
Application number: 10.MAY2000* 1480

Householder planning application form

Please answer all questions in CAPITAL letters.
If any question does not apply to you, put N/A in the space.
Please send six copies of the filled in form and your plans to the address on the front of the folder.
We provide guidance notes to help you fill in the form. If you have any questions, please call Planning Support on 0118 974 6428 or 0118 974 6429.

1	Your name	P. E. DUNSTER
	Address and postcode	THE HAVEN 80 WARREN ROAD TWYFORD READING RG10 9PJ
	Phone number	0118 9345131
	Agent's Name	
	Address and postcode	N/A
	Phone number	
3	Site We need you to send in six copies of the 1:2500 scale location plan and six copies of the 1:500 scale block plan, with the site outlined in red. You can buy these maps from the Environmental Services reception or order them by phoning 0118 974 6485.	As 1 ABOVE
4	Give brief details of the proposal for example, two storey side extension. About the application	CONSERVATORY WICKES DEVON DESIGN.
5	Are there any trees on the site? If Yes, please show their positions, spread and species of the trees on the plans. Say which trees you plan to cut down.	Yes ☐ No ☑
6	Please list the external materials you will use for example, red brick to match any existing bricks and dark stained timber.	GLASS AND PVCu ON RENDERED BLOCK WALL
7	Will the proposal change the pedestrian or vehicle access to the site? Please show details of the existing access and any proposed changes on the plans.	Yes ☐ No ☑
8	Will the car parking provision at the site be changed? If Yes, please show details of any changes on the plans.	Yes ☐ No ☑

3544 Crystal Mark
Clarity approved by Plain English Campaign

Please turn over

9	How many bedrooms does the property have?	Existing: 4	Proposed: N/A
10	Does a public right of way touch the site? If yes, please show the route and any proposed alternative on the plans.	Yes ☐	No ☑
11	Checklist. Please make sure that you enclose the following. a Six copies of this form signed and dated. b The fee (We have attached a current scale of fees). If you do not have to pay a fee, please say why below.		
	c Six copies of each set of plans and drawings listed below.		
	• 1:2500 scale location plan with the site outlined in red.		
	• 1:500 scale site layout plan.		
	• 1:100 or 1:200 scale floor plans and elevations.		

12 Certificate of ownership (Section 66 Town & Country Planning Act 1990)
Please delete either certificate A or certificate B. If neither apply, you must fill in a full certificate which you can get from Environmental Services.

(Owner means a person with a freehold interest, or someone who is a leasehold tenant with at least seven years left on their agreement)

Certificate A

I certify that

- At the beginning of the period of 21 days ending with the date of the application nobody, except the applicant, owned any part of the land which the application relates to.
- None of the land forms part of an agricultural holding.

Certificate B

I certify that

- I/or the applicant has given the necessary notice to everyone else who (at the beginning of the period of 21 days ending with the date of the application) owned any part of the land which the application relates to as listed below.

Owner's name	Address at which the notice was served	Date on which the notice was served

None of the land forms part of an agricultural holding.

Your signature: P E Munsl

on behalf of

Date 4/5/2000

Please tick this box if you or your husband, wife or partner are employed by Wokingham District Council ☐

ADDRESS 80 Wargrave Road PARISH Twyford

PLOT No. The Haven ORD. SHEET No. SU. 7876 29

BUILDER

Plan No.	Applicant	Description of Development	Date of Decision	Decision
533/71	Mr. R. Pope	2/Storey Extension	17.6.71	App. App.
BR25133	Mr. P. Dunster	4 windows	24.7.85	App N/A
27800			7.8.87	CEA
BRA3213	"	Lts. to Garage	21.7.87	App

DATE OF COMPLETION

MINISTRY DECISION

SPECIAL ORDERS Pd. Eng - Enlarge porch - 29.11.95

DRAINAGE PD. Eng - Mr Dunster. Conservatory. 28/4/99.

091074

SITE PLAN
80 WARGRAVE ROAD
TWYFORD
RG10 9PJ

10 MAY 2000 1480

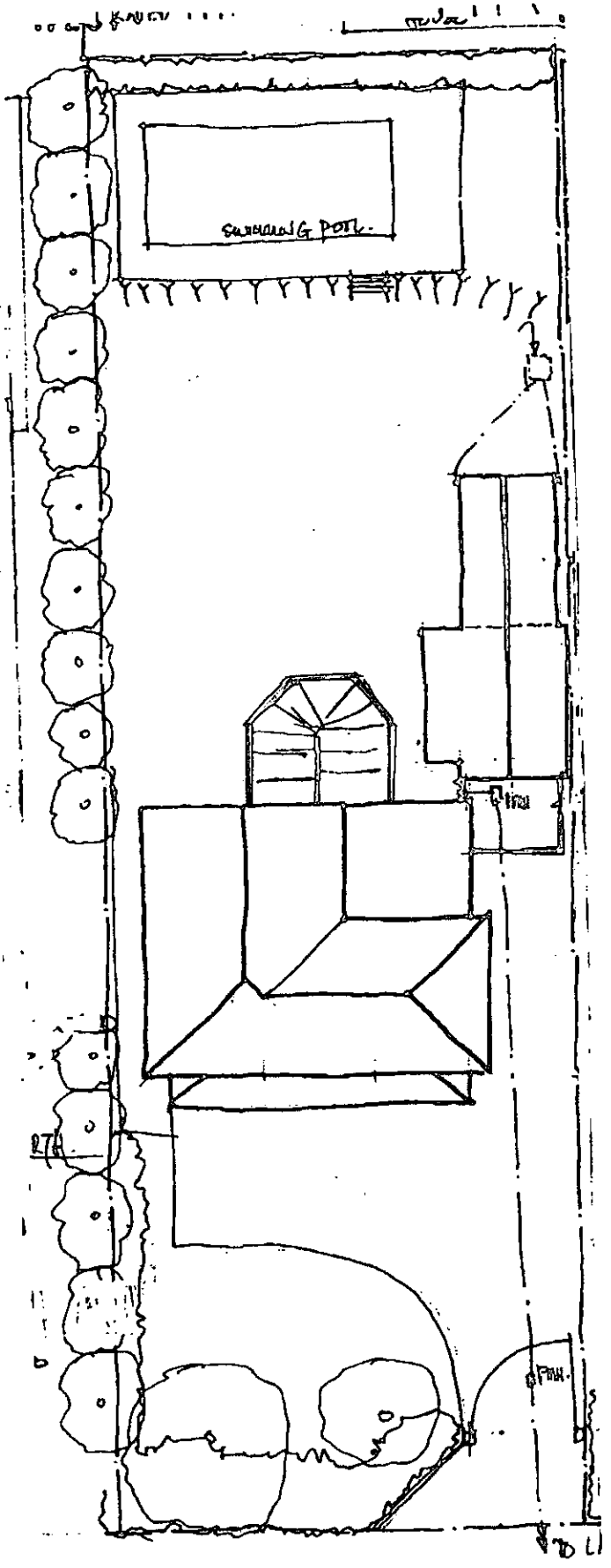

SCALE
1:200

APPROVED

8/5/2000

LAYOUT PLAN - (REAR)

80 WARCRAVE ROAD

TIVERTON

REAR HOUSE

DEVON CONSERVATORY

GARAGE

4187

DOOR

1500

3468

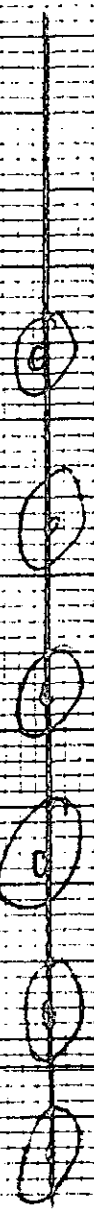

SCALE

10 MAY 2000

APPROVED

SCALE 1:50

= METER

= 10 CENTIMETER

1460

1480

10 MAY 2000*

NORTH ELEVATION -
80 WARGRAVE ROAD
TWYFORD
RG10 9PJ

SCALE 1:50

SOUTH ELEVATION
80 WARGRAVE ROAD
TWYFORD
RG10 9PJ

SCALE 1:50

DWARF WALL
PEBBLE DASH RENDER
TO MATCH HOUSE

APPROVED

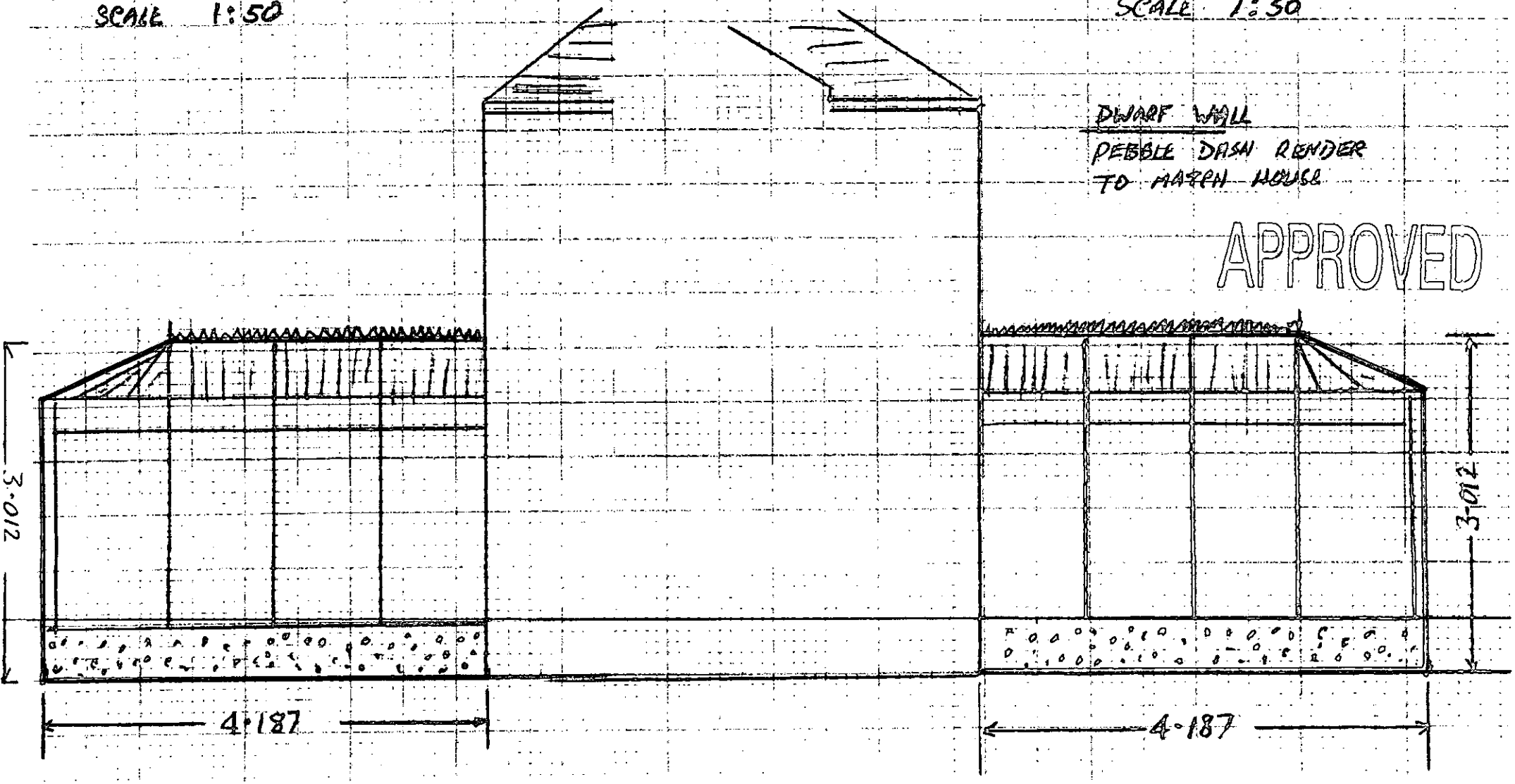

8/5/2000

REAR ELEVATION - (EAST)

80 WARREHVE ROAD
TYFORD
RG10 9QJ

DEVON CONSERVATORY

DWARF WALL
PEBBLE DASH RENDER
TO MATCH HOUSE

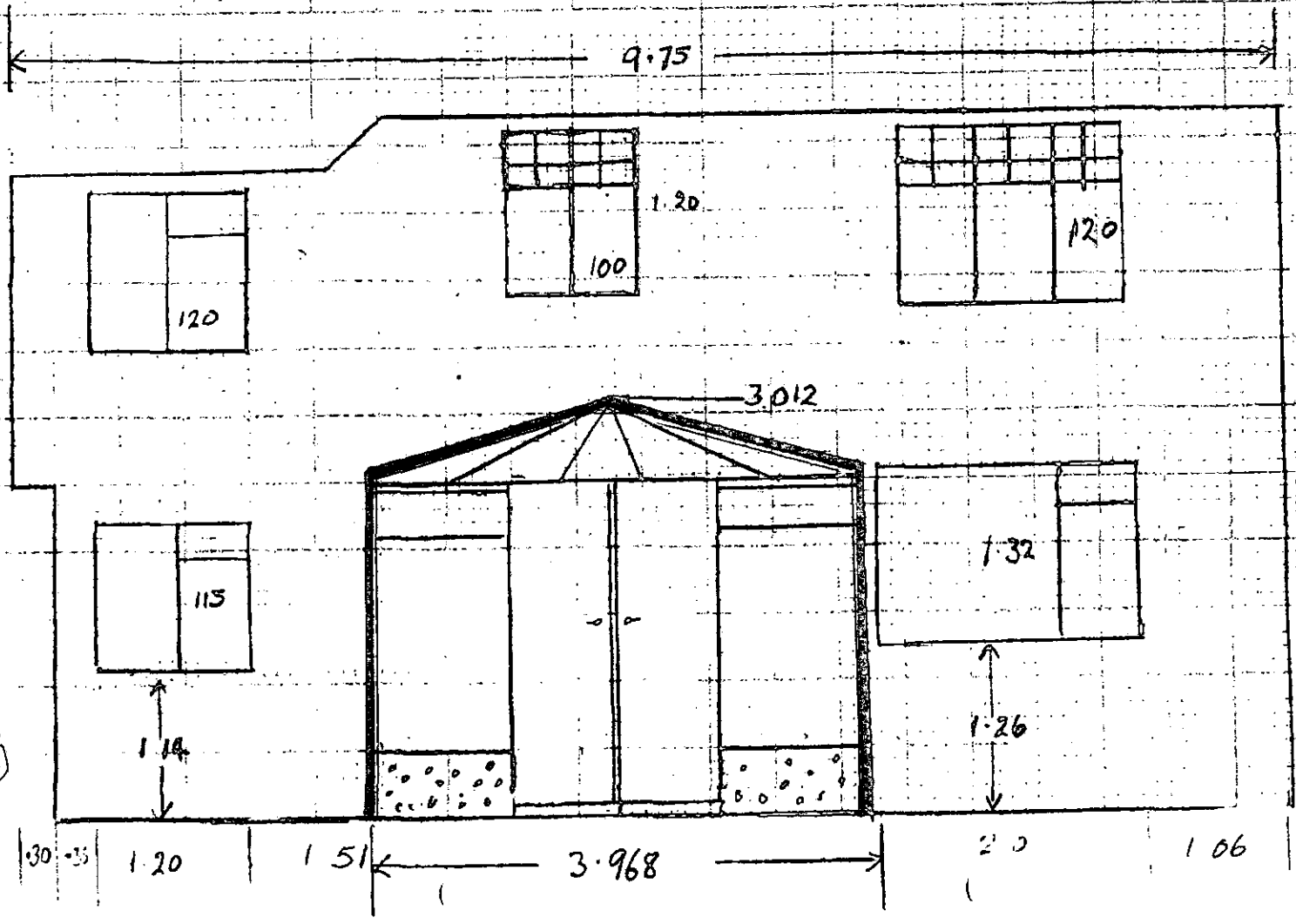

SCALE
1:50.

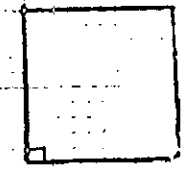

METER
10 CENTIMETER

APPROVED

10 MAY 2000 * 1480

10 MAY 2000*

Devon

Victorian Style

Dwarf wall PVCu Conservatory

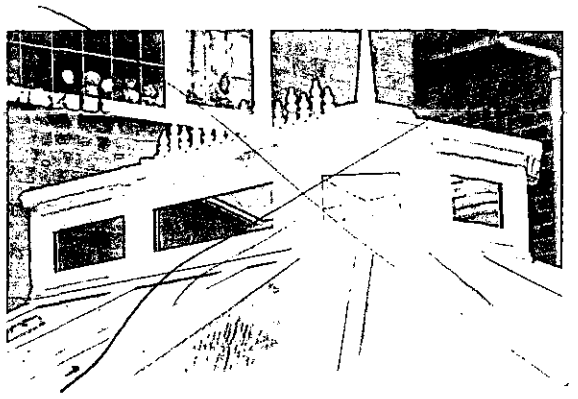

New for 2000 a Jack Lantern roof available

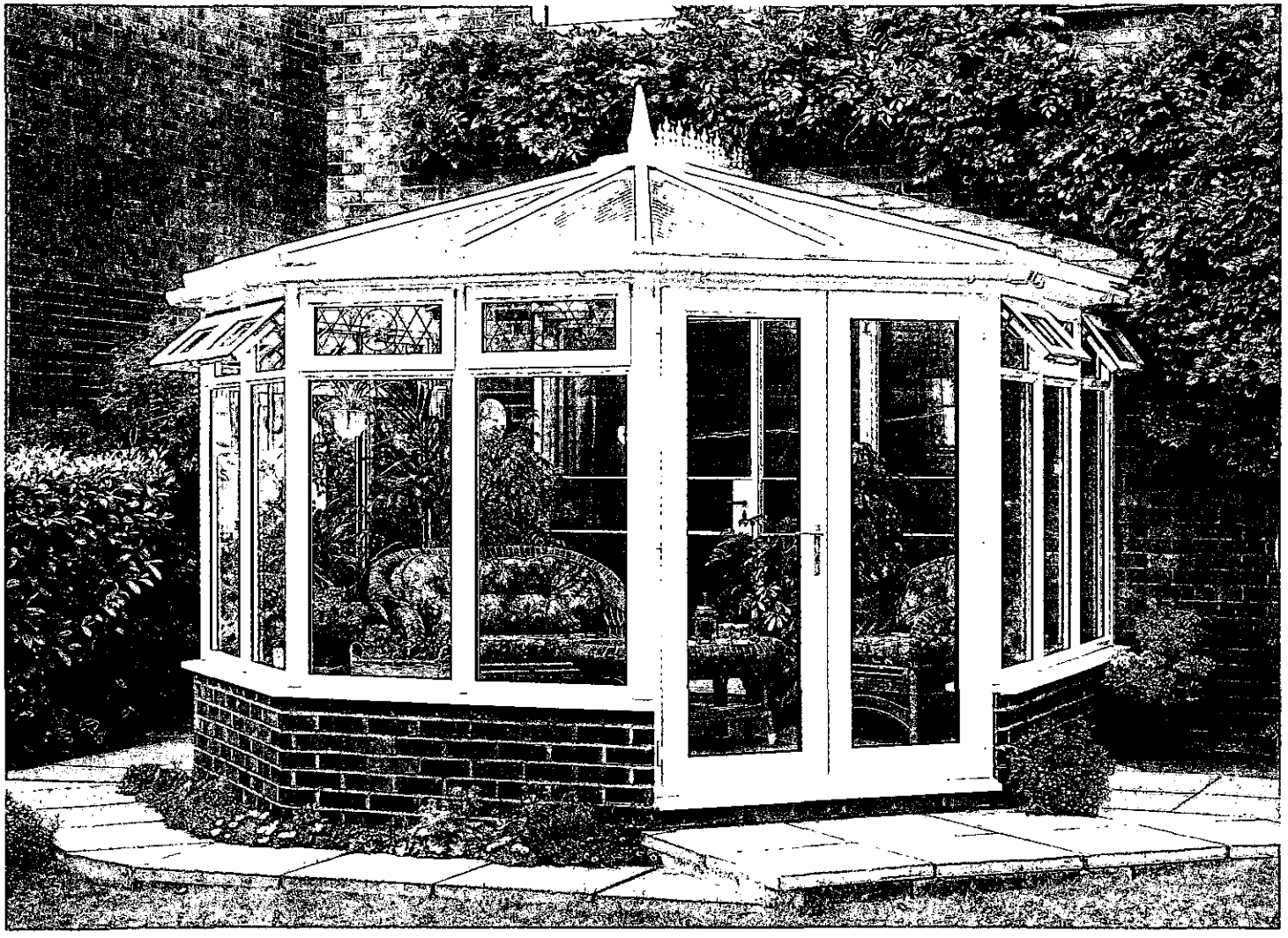

Size shown: 3.8 x 3.4 x 2.8m approx (WxDxH)

WIDE RANGE OF QUALITY HARDWOOD AND PVCu CONSERVATORIES AT EXCELLENT VALUE FOR MONEY PRICES

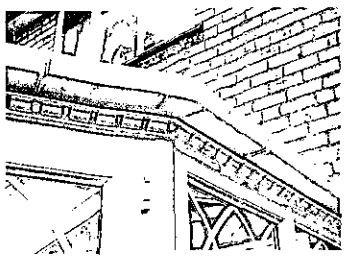

PVCu Dentil moulding

Add our decorative Dentil moulding to PVCu conservatories to enhance the quality appearance.

Choose from clear or bronze polycarbonate roofing to add further appeal to your conservatory.

APPROVED

Wickes Home Improvement Centres

Diagram 3

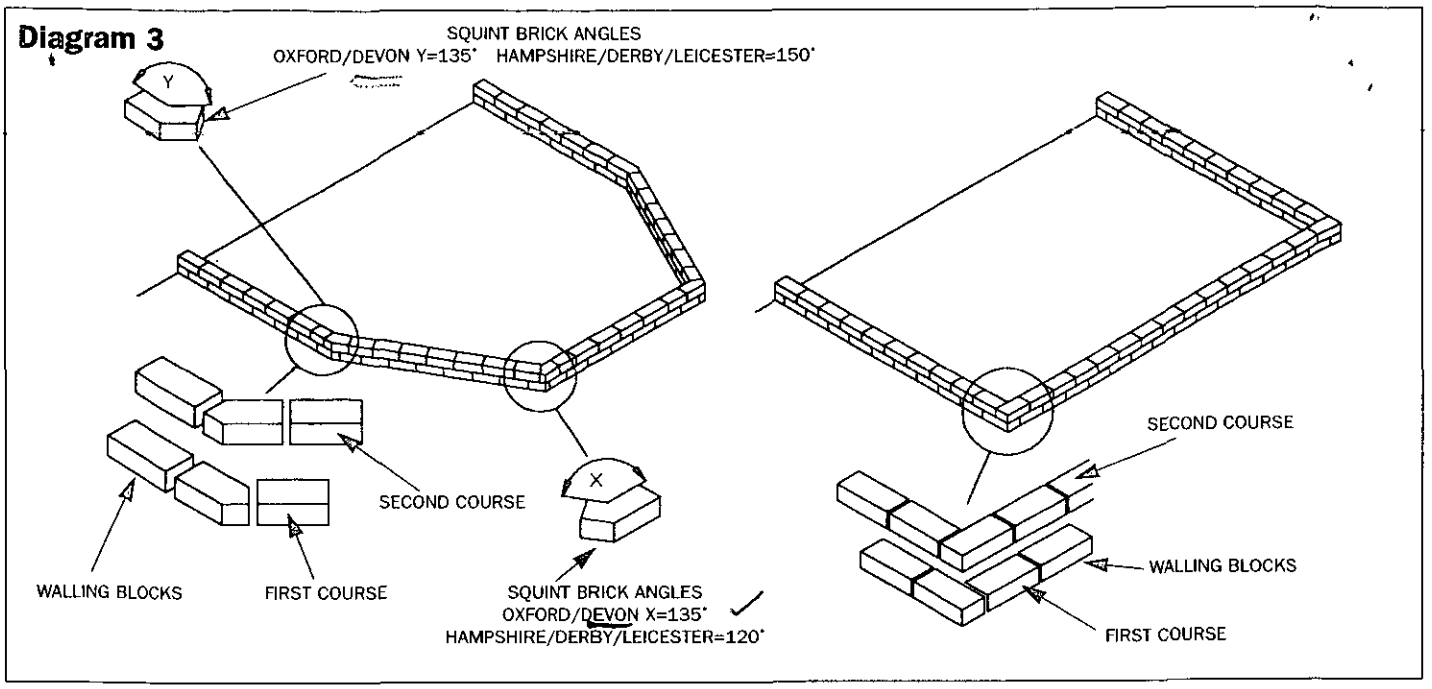

Diagram 4

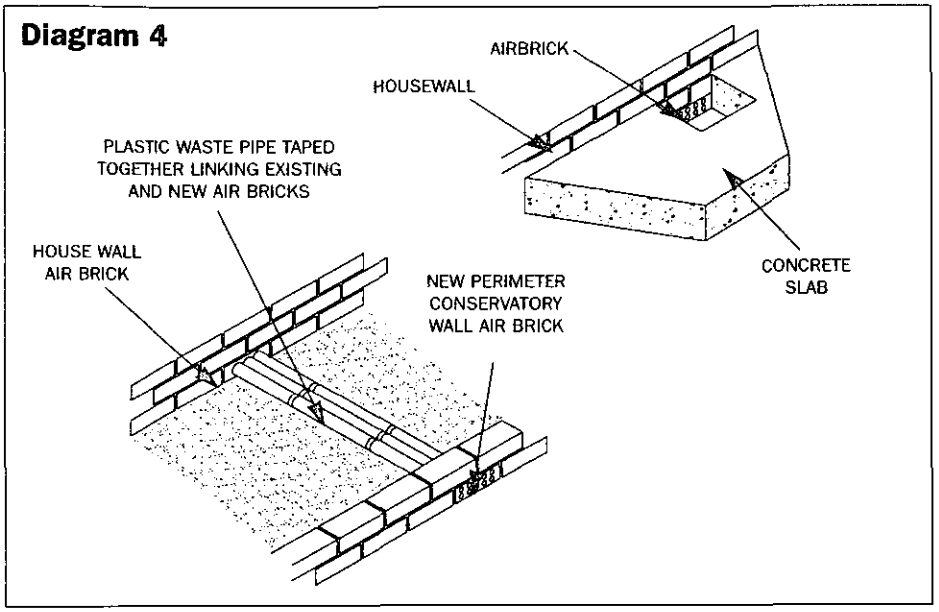

Specialist work will be required if the base walling is to be more than 400mm above ground level at any point. Such a retaining wall must be able to withstand any back-fill pressures.

If utilising an alternative Wickes base system then you must follow the installation instructions supplied with the product. The external base wall dimensions will remain as specified in **Diagrams 8** to **17** (pages 7 to 16) for the varrious design options.

If your concrete slab will cover any airbricks in the existing house wall below DPC level, it is essential that provision is made for ventilation through the airbricks to continue. They cannot simply be blocked off. You will need to incorporate air bricks in the conservatory perimeter wall and link between the house and new conservatory airbricks with ducting. The ducting can be plastic waste pipe taped together side by side and secured to the existing and new airbricks being subsequently covered by the concrete slab, **Diagram 4**. In some situations, for example where levels make the use of ducting impractical, it may be necessary to leave existing airbricks open allowing air intake from the conservatory instead of outside.

Dwarf Wall Models Only
Once the external wall is built up to DPC level, the inner skin of the cavity wall can be built up to the same level. Refer to diagrams 8 to 17 and mark the position of your door opening on the external skin of brickwork.

***Note. Door locations cannot be made adjacent to the front corners of the c onservatory on the York, Cumbria and Worcester options. Diagram 5** shows how the inner skin of the cavity wall is built with a section missing where the doors are to be located above. The cavity is closed at these locations.*

Spread a 50mm thickness of sand on top of well compacted hardcore. The damp proof membrane is laid on top of this sand so that the sheet overlaps the wall on all sides, and reaches up the back (house) wall to just above DPC level. **Diagram 6.**

With a cavity wall construction, the sheet will overlap the inner wall, except at the door opening when it will overlap the outer wall.

Infill with concrete to a minimum depth of 100mm, to finish level with the top of the perimeter wall. *With a cavity wall, at the door opening the concrete is laid up to the outer skin.*

Leave the concrete to dry out thoroughly before commencing with the conservatory construction.

Dwarf Wall Models Only
*Lay a DPC into your first mortar course and build up the dwarf wall as in **Diagram 7**. A separate DPC is used on both skins of the cavity wall and must tie into the house DPC. Note the use of a vertical DPC located to each side of the door opening where the cavities are closed. Using brick wall ties build up the courses of bricks to finish precisely 380mm or 750mm, depending upon the conservatory panel type being used, above the DPC level. Use wall starters to tie the brickwork into the existing house wall. Insert cavity wall batts into the cavity. If you have any doubt about your bricklaying skills you should call in a skilled bricklayer.*

*Refer to **Diagram 8** to **17** (pages 6 to 15) to ensure the external brick dimensions are maintained and that the brick openings for the doors are made to the correct size and located in the correct position.*

Allow your brickwork to set completely before continuing with the conservatory construction.

Diagram 1

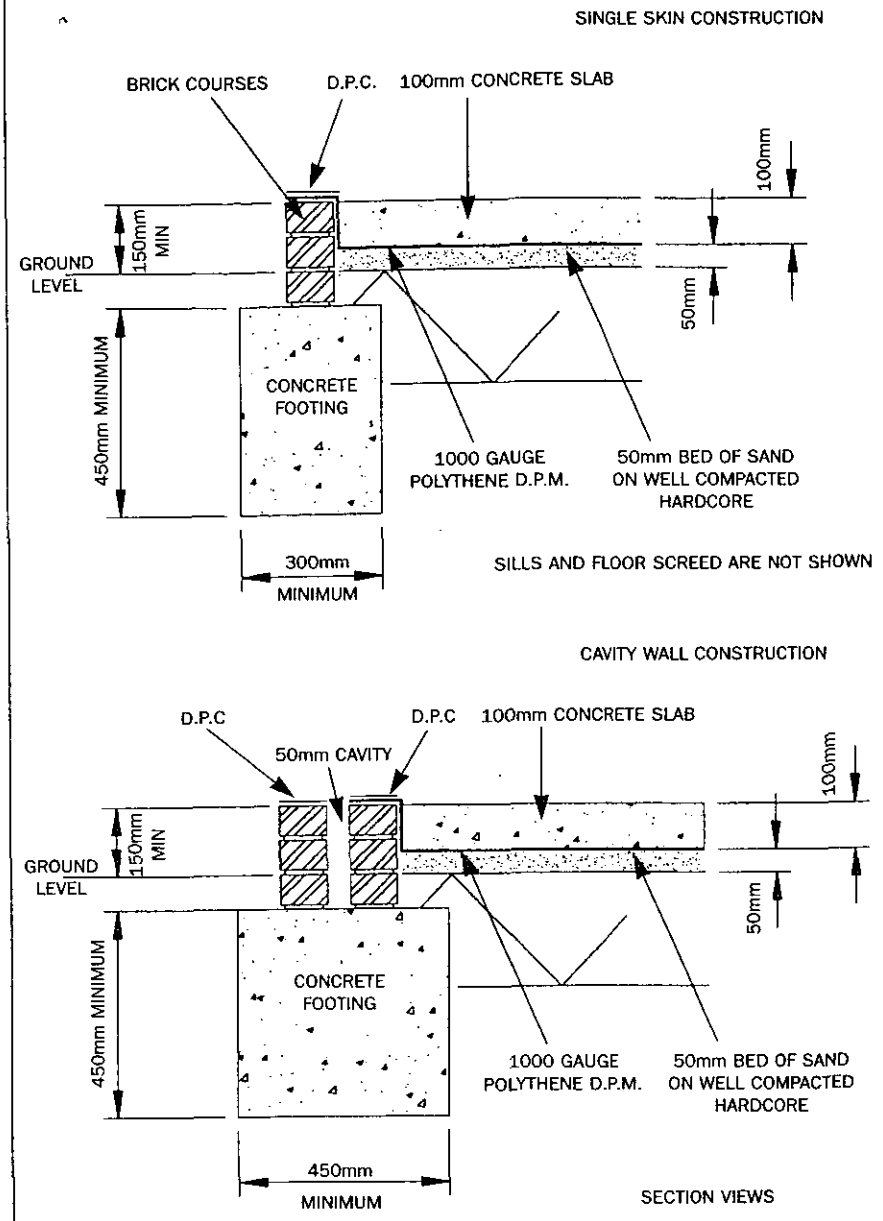

Diagram 2

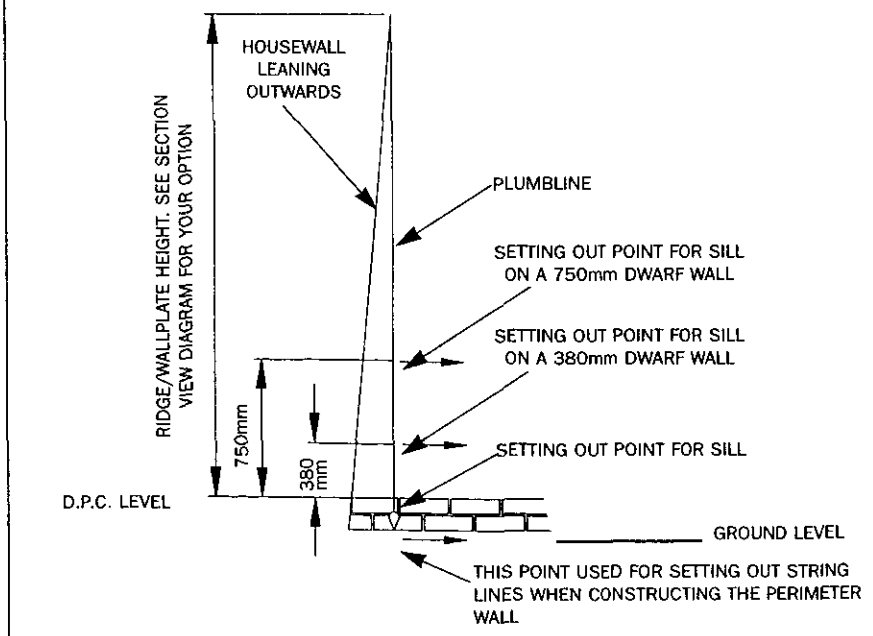

nal face of the brickwork to the dimensions in the design option pages.
Dig out the oversite to a depth which allows for the hardcore, sand and concrete base, finishing at DPC level as indicated in diagram 1.

If you are intending to insulate your floor, increase the depth of the oversite dig to accommodate 50mm of polystyrene slabs which is laid between the DPM and the concrete slab.

Important
The house wall against which any conservatory is to be built must be flat and smooth. If walls are roughcast or pebbledashed then it may be necessary to chop away the surface to accommodate the panels at the sides and the roof assembly wall plates.

In addition the walls must be vertical. If they have a tendency to lean outwards as they go up, your conservatory panels will, in theory, only touch the wall at the top, leaving a gap at the bottom. Use a plumb bob and line to check that the wall is vertical. If it is as in **Diagram 2** the conservatory base dimensions must be measured from the point where the plumb bob rests. The brick base will be slightly increased in size to make up the difference. When the sills are secured, they will also start at this point, the wall mullion Part 16 will be packed off the house wall so that it is secured in the vertical position.

If the housewall leans inwards then the brick base will be built exactly to the dimensions in the varrious design option pages, but the conservatory components being fitted to the housewall will all have to be packed off the housewall by the required amount to ensure all components are fitted vertical and plumb.
When you have checked and double checked that your string lines are as in diagrams 8 to 17, correctly positioned with any adjustments for outward leaning housewalls, and the layout is square to the house wall you can begin laying the perimeter walling. This must be built up to at least 150mm above ground level. Whilst building constantly check that the walling is perfectly level and vertical and the overall base dimensions are maintained.

Points to remember. If using standard bricks with frogs the last/top course should be laid upside down to hide the frog. The use of bricks with frogs, which will be seen when cutting is done at angled corners (Victorian style conservatories), is not advisable. Use solid bricks or angled squint bricks at these positions. **Note: If ordering squint bricks allow plenty of lead time, as these are not usually a stocked item.** At corners the bricks/walling blocks must overlap as in normal brick-laying. **Diagram 3**. Any cutting of bricks to suit the required size is best done with an angle grinder.

Diagram 5

PLAN VIEWS

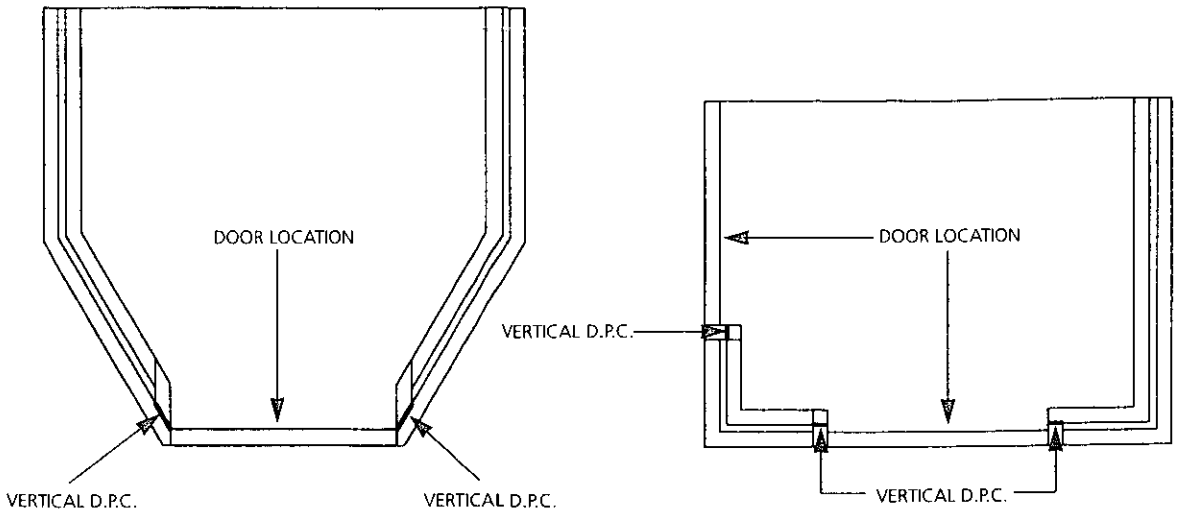

AT EACH OF THE VARIOUS DOOR LOCATIONS THE INNER WALL SECTION IS NOT REQUIRED, WITH THE CAVITY CLOSED AT THESE LOCATIONS.

Diagram 6

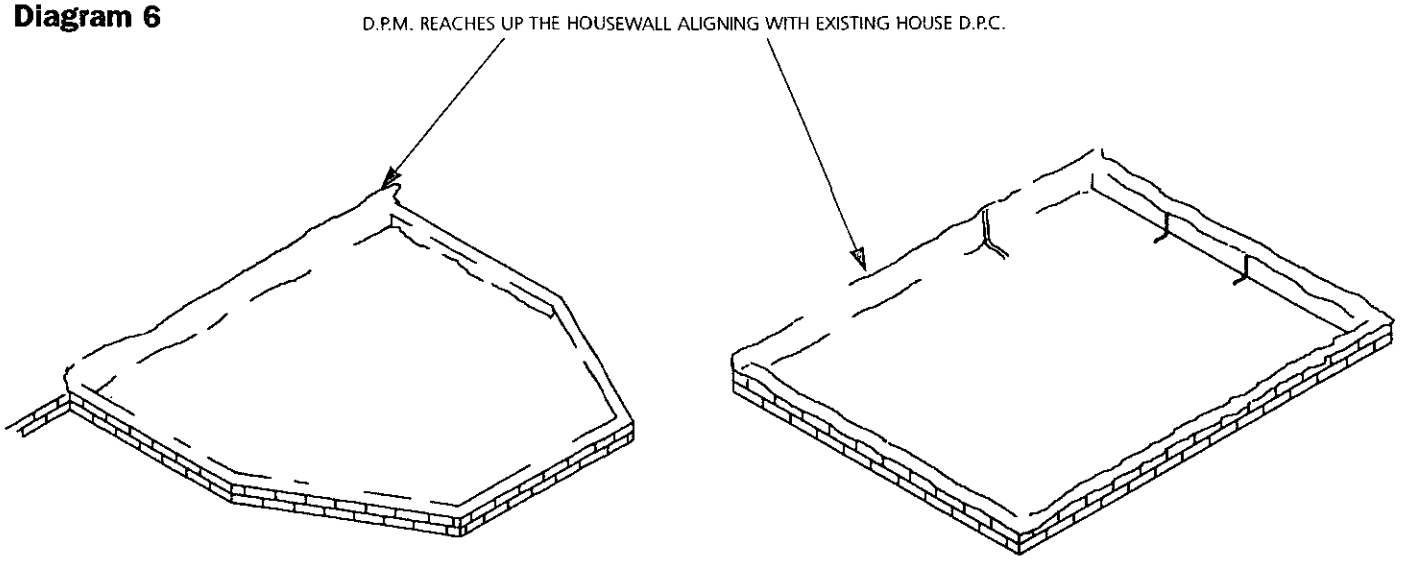

THE D.P.M. IS LAID ON A BED OF SAND AND MUST OVERLAP THE OUTER WALL FOR A SINGLE SKIN CONSTRUCTION AND THE INNER WALL FOR A CAVITY CONSTRUCTION

Diagram 7

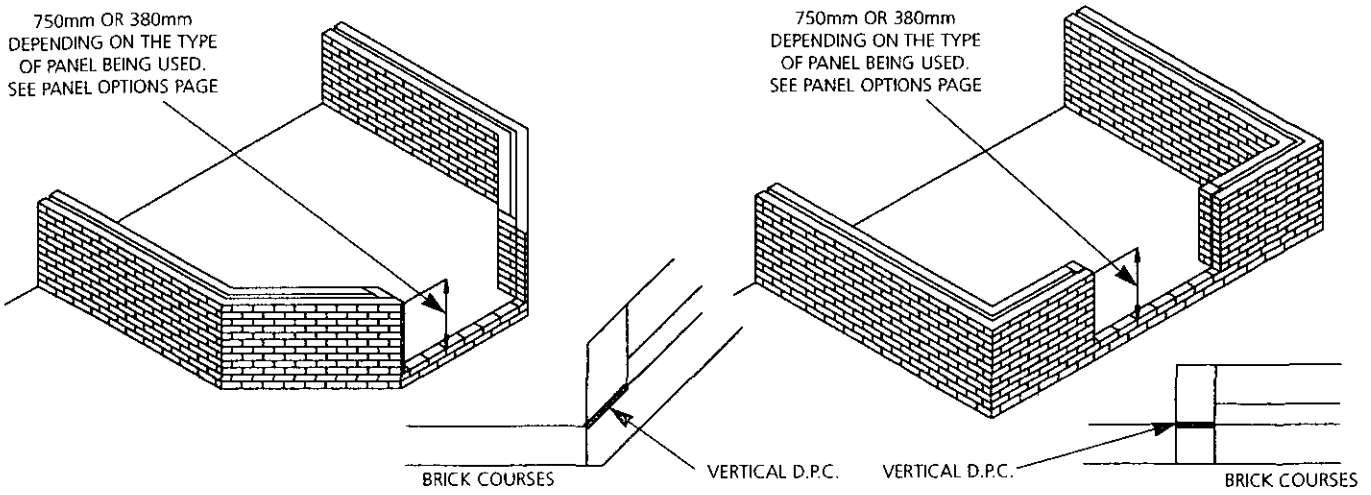

PLAN VIEW SHOWING THE CAVITY CLOSED AT THE DOOR OPENING AND THE VERTICAL D.P.C.

PLAN VIEW SHOWING THE CAVITY CLOSED AT THE DOOR OPENING AND THE VERTICAL D.P.C.

Diagram 8

OXFORD AND DEVON DESIGN OPTIONS
DIMENSIONS SHOWN ARE EXTERNAL BRICKWORK MEASUREMENTS
ALL DIMENSION IN mm

PLAN VIEW

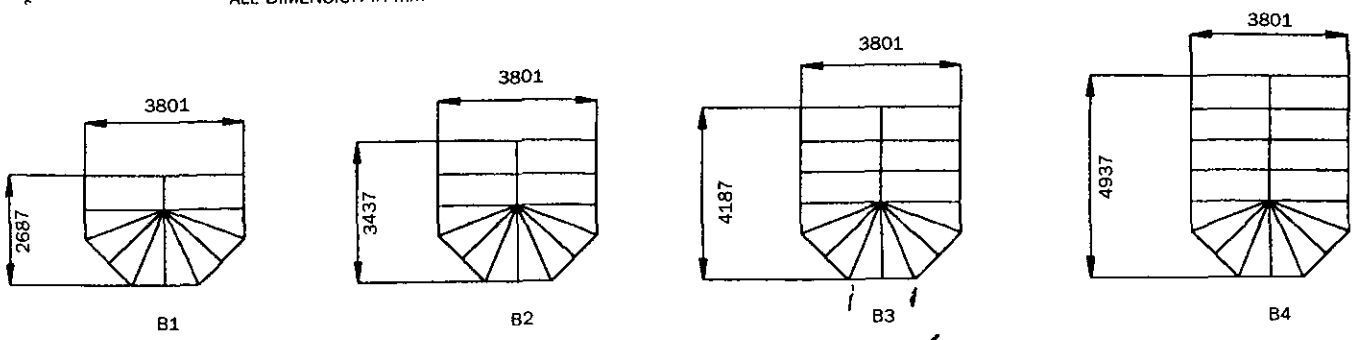

SEE PAGE 13 FOR BOX GUTTER OXFORD AND DEVON DESIGN OPTIONS.

STRINGLINE DIAGRAM
DIMENSIONS SHOWN ARE EXTERNAL BRICKWORK MEASUREMENTS

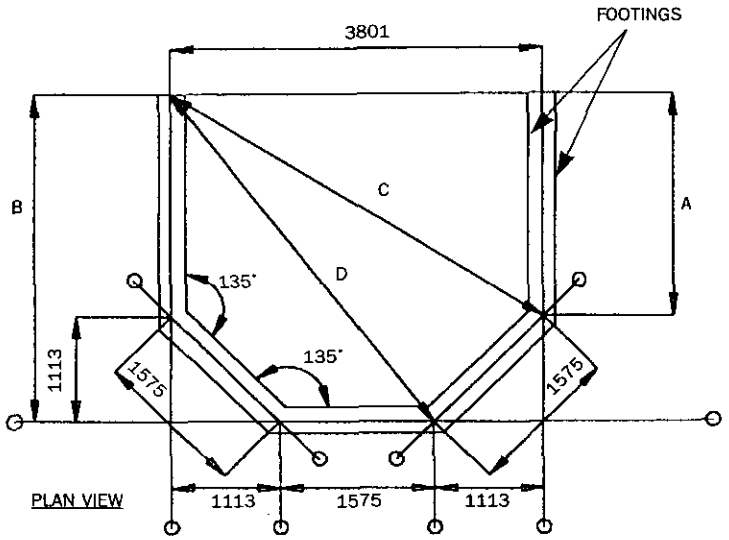

OPTION	DIMENSIONS			
	A	B	C	D
B1	1574	2687	4114	3801
B2	2324	3437	4455	4363
B3	3074	4187	4888	4975
B4	3824	4937	5391	5621

SECTION AT HOUSEWALL

E = BRICKWALL HEIGHT FROM D.P.C. LEVEL
F = PANEL HEIGHT INCLUDING SILL
G = HEIGHT TO UNDERSIDE OF RAFTER FROM D.P.C. LEVEL
H = HEIGHT TO UNDERSIDE OF RIDGE CAVITY CLIP FROM D.P.C. LEVEL
I = HEIGHT TO TOP OF RIDGE CAPPING FROM D.P.C. LEVEL

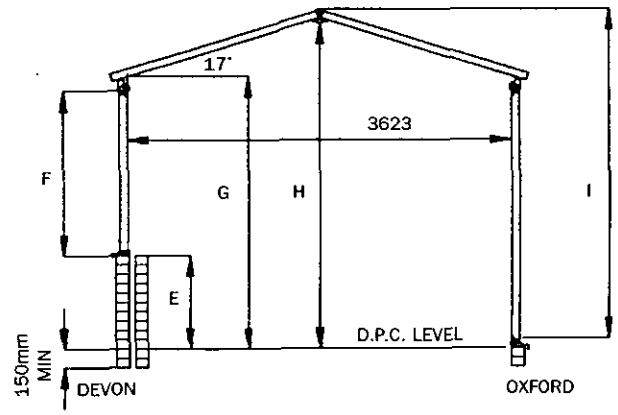

PANEL OPTION	E	F	G	H	I
FULL HEIGHT PANEL	N/A	2055	2170	2683	2792
STD DWARF WALL PANEL	750	1305	2170	2683	2792
HIGH LEVEL DWARF WALL PANEL VENT ABOVE DOOR	750	1675	2540	3055	3162
HIGH LEVEL DWARF WALL PANEL VENT FLUSH WITH DOOR	380	1675	2170	2683	2792

NB. IF USING THE DENTIL RAIL DIMENSIONS G, H AND I INCREASE BY 46mm.

FRENCH DOOR AND PATIO DOOR BRICKWORK OPENING DIMENSIONS FOR THE DEVON

PLAN VIEW

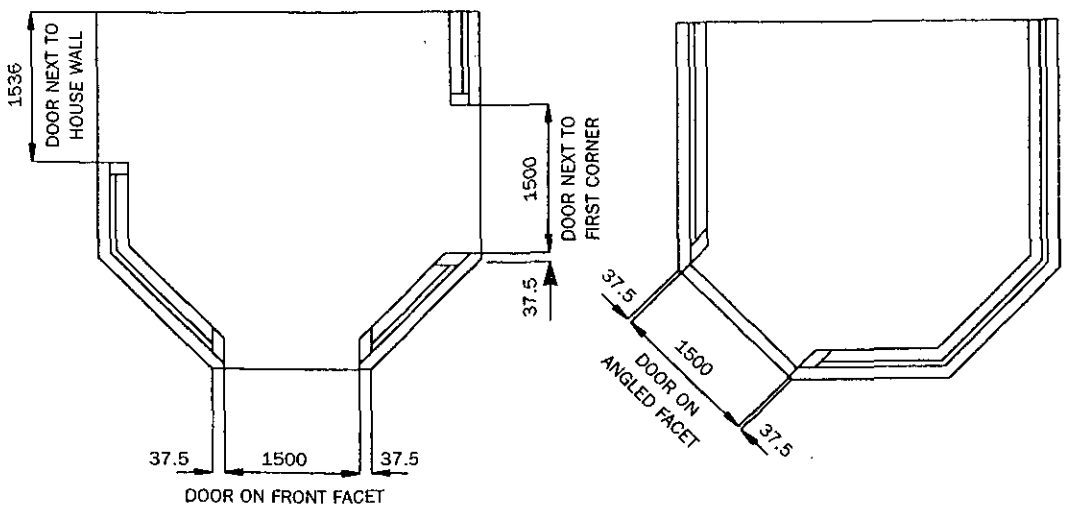

IF FITTING A RESIDENTIAL DOOR, REDUCE OPENING DIMENSIONS SHOWN FROM ONE SIDE ONLY BY 750mm.

Diagram 15

BOX GUTTER OXFORD AND DEVON DESIGN OPTIONS
DIMENSIONS SHOWN ARE EXTERNAL MEASUREMENTS
BRICKWORK ALL DIMENSION IN mm

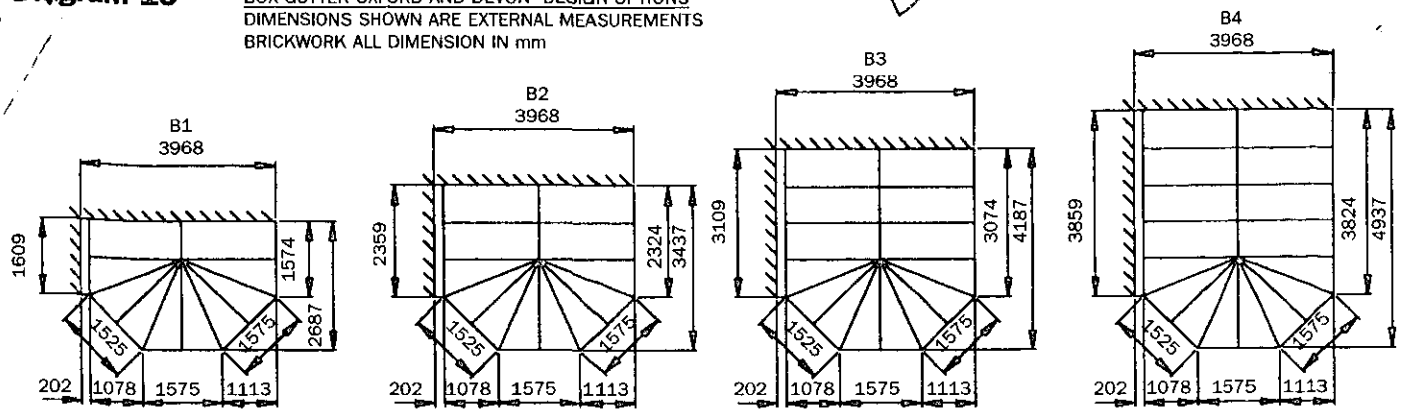

STRINGLINE DIAGRAM
DIMENSIONS SHOWN ARE EXTERNAL BRICKWORK MEASUREMENTS

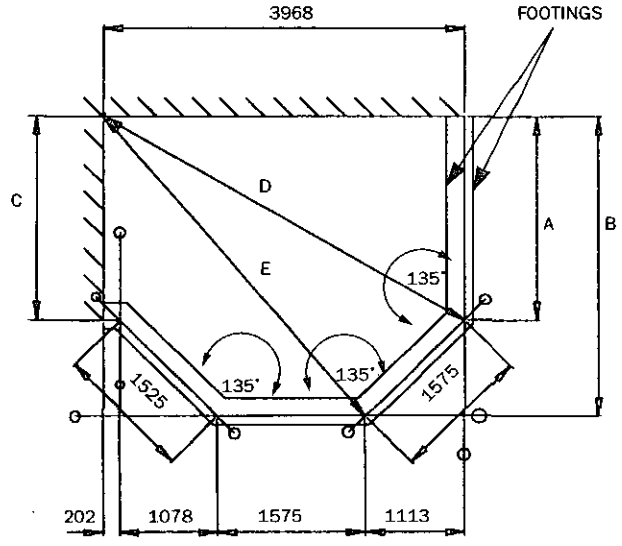

OPTION	DIMENSIONS				
	A	B	C	D	E
B1	1574	2687	1609	4269	3920
B2	2324	3437	2359	4598	4468
B3	3074	4187	3109	5019	5067
B4	3824	4937	3859	5511	5703

SECTION VIEW AT HOUSEWALL

F = BRICKWALL HEIGHT FROM D.P.C. LEVEL
G = PANEL HEIGHT INCLUDING SILL
H = HEIGHT TO UNDERSIDE OF RAFTER FROM D.P.C. LEVEL
I = HEIGHT TO UNDERSIDE OF RIDGE CAVITY CLIP FROM D.P.C. LEVEL
J = HEIGHT TO TOP OF RIDGE CAPPING FROM D.P.C. LEVEL

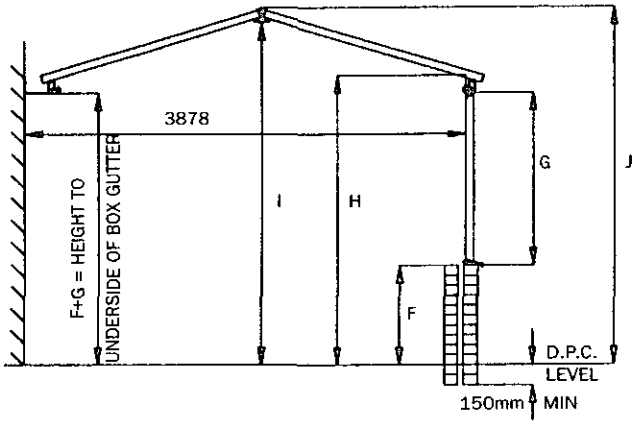

PANEL OPTION	F	G	H	I	J
FULL HEIGHT PANEL	N/A	2055	2170	2683	2792
STD DWARF WALL PANEL	750	1305	2170	2683	2792
HIGH LEVEL DWARF WALL PANEL VENT ABOVE DOOR	750	1675	2540	3055	3162
HIGH LEVEL DWARF WALL PANEL VENT FLUSH WITH DOOR	380	1675	2170	2683	2792

NB. IF USING THE DENTIL RAIL DIMENSIONS H, I AND J INCREASE BY 46mm.

APPROVED

FRENCH DOOR AND PATIO DOOR BRICKWORK OPENING DIMENSIONS FOR THE DEVON

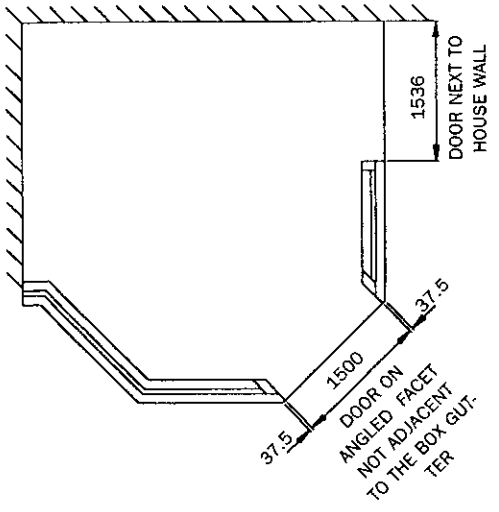

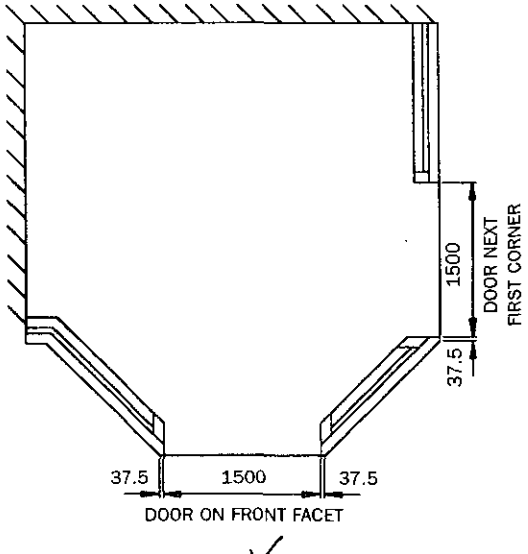

IF FITTING A RESIDENTIAL DOOR, REDUCE OPENING DIMENSION SHOWN FROM ONE SIDE ONLY BY 750mm.

Diagram 16

BOX GUTTER PEMBROKE AND CUMBRIA DESIGN OPTIONS
DIMENSIONS SHOWN ARE EXTERNAL BRICKWORK MEASUREMENTS
ALL DIMENSION IN mm

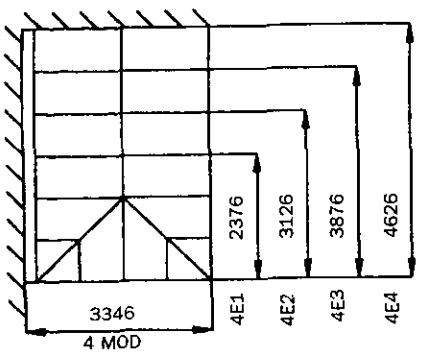

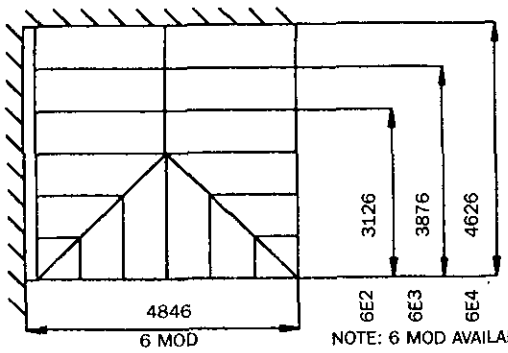

NOTE: 6 MOD AVAILABLE SUMMER 1998

STRINGLINE DIAGRAM
EXTERNAL BRICKWORK MEASUREMENTS

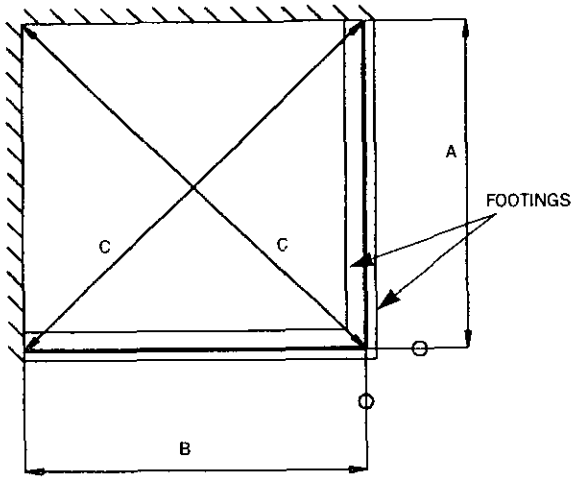

OPTION	DIMENSIONS		
	A	B	C
4E1	2376	3346	4104
4E2	3126	3346	4579
4E3	3876	3346	5120
4E4	4626	3346	5709
6E2	3126	4846	5767
6E3	3876	4846	6206
6E4	4626	4846	6700

SECTION AT HOUSEWALL

D = BRICKWALL HEIGHT FROM D.P.C. LEVEL
E = PANEL HEIGHT INCLUDING SILL
F = HEIGHT TO UNDERSIDE OF RAFTER FROM D.P.C. LEVEL
G = HEIGHT TO UNDERSIDE OF RIDGE CAVITY CLIP FROM D.P.C. LEVEL
H = HEIGHT TO TOP OF RIDGE CAP FROM D.P.C. LEVEL
I = INTERNAL PANEL WIDTH

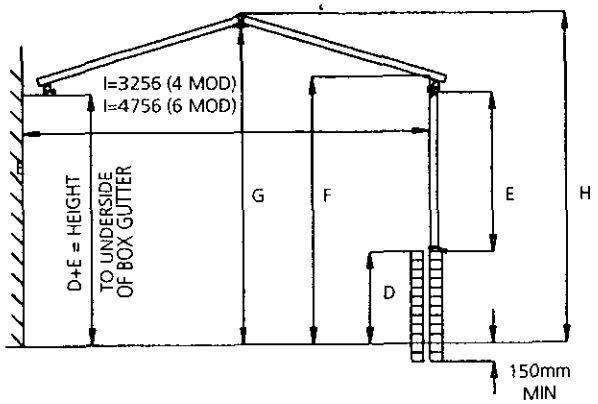

PANEL OPTIONS	COMMON DIMENSION			4 MOD		6 MOD	
	D	E	F	G	H	G	H
FULL HEIGHT PANEL	N/A	2055	2170	2588	2697	2817	2926
STD DWARF WALL PANEL	750	1305	2170	2588	2697	2817	2926
HIGH LEVEL DWARF WALL PANEL VENT ABOVE DOOR	750	1675	2540	2958	3067	3187	3416
HIGH LEVEL DWARF WALL PANEL VENT FLUSH WITH DOOR	380	1675	2170	2588	2697	2817	2916

NB. IF USING THE DENTIL RAIL DIMENSIONS F, G AND H INCREASE BY 46mm.

FRENCH DOOR AND PATIO DOOR OPENINGS FOR THE BOX GUTTER CUMBRIA

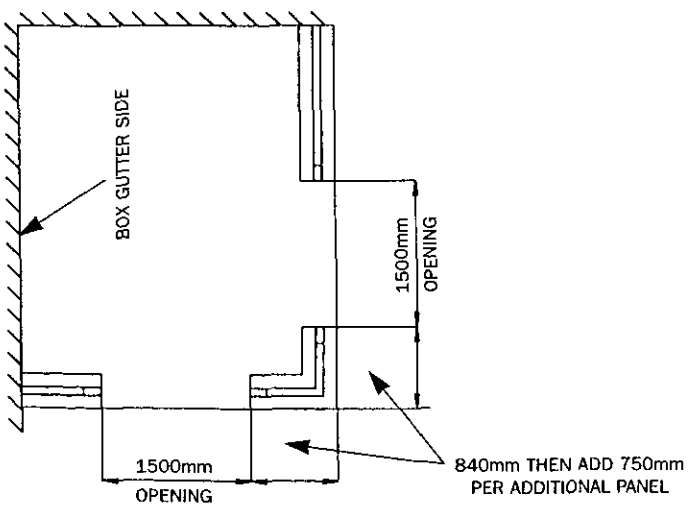

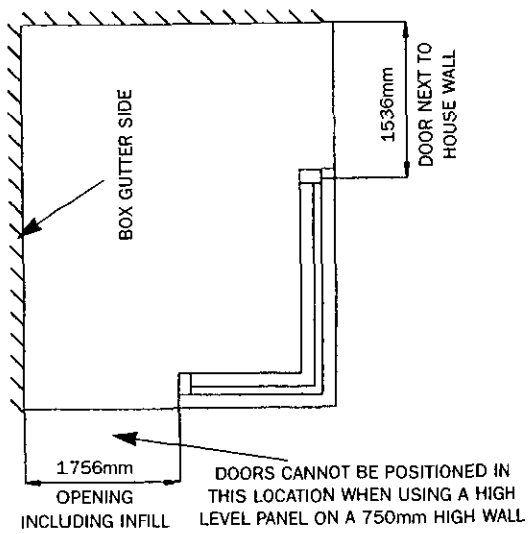

IF FITTING A RESIDENTIAL DOOR, REDUCE OPENING DIMENSION SHOWN FROM ONE SIDE ONLY BY 750mm.



This map is based upon Ordnance Survey material with the permission of Ordnance Survey on behalf of the Controller of HMSO. © Crown Copyright.
Unauthorised reproduction infringes Crown Copyright and may lead to prosecution or civil proceedings.Wokingham District Council Licence LA086134

Development Control Section, Environmental Services, Wokingham District Council.

17 May 2000

Scale: 1 : 1250