SYSTEMS LTD
SOUTHPORT U.K. Tel.01704 226866 Fax.01704 225814
LONDON OFFICE Tel.0171 377 1777 Fax.0171 247 6181

Confidential 4-2-4-01

APPLICATION NO:
F/2000/1726

LOCATION:
Western Site Headley Park Industrial Estate Headley Road East, Woodley Reading.

APPLICANT:
Orange Pcs Ltd C/O Heritage Planning Ltd

PROPOSAL:
Proposed 25 metre high replacement telecommunication mast and associated development.

EARLIEST DATE FOR DECISION: **15/07/2000**

APPLICATION WILL HAVE EXPIRED ON:
07/08/2000

CASE OFFICER: **Heather Morgan**

WOKINGHAM DISTRICT COUNCIL

TOWN AND COUNTRY PLANNING ACTS

Notification of Approval of Permission

Orange Pcs Ltd
C/O Heritage Planning Ltd
120 Eastwood Drive
Highwoods
Colchester
Essex
CO4 4SL

Application Number: F/2000/1726

Parish: **WOODLEY**

Location: **Western Site Headley Park Industrial Estate, Headley Road East, Woodley, Reading.**

Proposal: **Proposed 25 metre high replacement telecommunication mast and associated development.**

The Wokingham District Council in pursuance of their powers under the above Acts and Regulations hereby **Approve Permission** for carrying out the above development in accordance with the application and the accompanying plans submitted to the Council subject to compliance with the following conditions, the reasons for which are specified hereunder.

Condition
1. The development hereby permitted shall be begun before the expiration of five years from the date of this permission.

Condition
2. The existing mast approved under F/2000/0511 shall be removed in its entirety upon completion of the replacement mast hereby approved.

Reason
1. In pursuance of Section 91(1) of the Town and Country Planning Act 1990.

Reason

2. To ensure the amentiy of the area is not adversely affected and to ensure the removal of redundant facilities.

John Mitchell

John Mitchell
Development Control Manager
Date: 31/07/2000

If this notice grants permission to proceed with the proposal the applicant is reminded that it relates to planning permission only and does not constitute approval under any other legislation including Building Regulations.

Tel. 0118 974 6445 (Direct Line)
E-mail: Angela.Odell@wokingham.gov.uk
Date. 5 December, 2002
My ref. AO/F/2001/4929
Your ref. PA/AL/BRK0088

Smith Woolley Telecom
Capital Park
Fulbourn
CAMBRIDGE
CCB1 5XE

Environmental Services Department
Planning Services
P.O. Box 157
Shute End, Wokingham
Berkshire RG40 1WR
Tel: (0118) 974 6000
Fax: (0118) 974 6484
Minicom No: (0118) 977 8909
DX: 33506 – Wokingham

Dear Sirs

PLANNING APPLICATION F/2001 1726
ERECTION OF REPLACEMENT 25M. HIGH TELECOMMUNICAITONS MAST AND ASSOCIATED DEVELOPMENT AT WESTERN SITE, HEADLEY PARK INDUSTRIAL ESTATE, WOODLEY

Thank you for your letter of 2 December and enclosed plan. As the proposed revision involves re-siting, I advise you that it cannot be accepted as a minor amendment and a new planning application will be required. I enclose the required forms.

Yours sincerely

MRS A ODELL
Planning Officer

Reply Regard. 63964

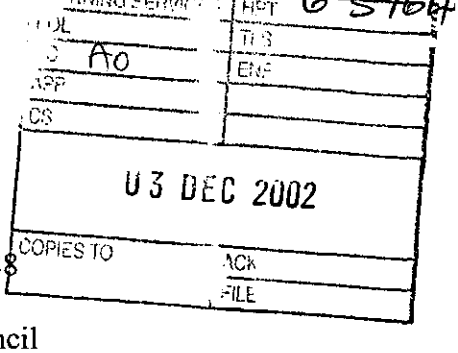

SMITH WOOLLEY TELECOM
An LCC Company

Our Ref: PA/AL/BRK0088

Wokingham District Council
Head of Planning and Transportation
Planning Services
P.O Box 157
Shute End
Wokingham
Berkshire
RG4 1WR

2 December 2002

Dear Sir

RE ORANGE PCS LTD SITE BRK0088 AT WESTERN SITE, HEADLEY PARK INDUSTRIAL ESTATE, HEADLEY ROAD EAST, WOODLEY, READING

You will be aware that we submitted a full planning application reference F/2001/4929 for the proposed redevelopment of the existing 15m telecomm mast to a 30m high Telecomm mast with associated cabin and compound extension. Consent in this respect was refused on 13th March 2002 due to the envisaged adverse visual impact on the character of the area.

Our earlier application reference F/2000/1726 in respect of a proposed 25m high replacement telecommunication mast and associated development was approved by the authority on 31st July 2000.

My client has commenced works for the approved new structure but has subsequently discovered that the current tower base has been built on top of a reinforced concrete chamber.

I have been asked by my client to write to you to investigate the possibility of the Authority consenting to resiteing of this new tower and associated compound extension and fencing works by way of a minor amendment to the approved scheme.

The proposed area in question is edged in red on the attached drawings reference 30/BRK0088/101A.

I look forward to hearing from you further in this matter shortly.

Should you require any further information or wish to discuss this matter, please do not hesitate to contact the writer, Paul Askew at the address below.

CAPITAL PARK, FULBOURN, CAMBRIDGE CB1 5XE
TEL 01223 883999 FAX 01223 883998 cambridge@swtele.co.uk www.swtele.co.uk

LCC Deployment Services UK Ltd trading as Smith Woolley Telecom
Registered in England and Wales, Registration Number 4349192
Registered Office; Minerva House, Montague Close, London SE1 9BB

INVESTORS IN PEOPLE

BATH CAMBRIDGE ENFIELD LONDON NEWARK

Yours faithfully



Smith Woolley Telecom
paskew@swtele.co.uk

Enc.

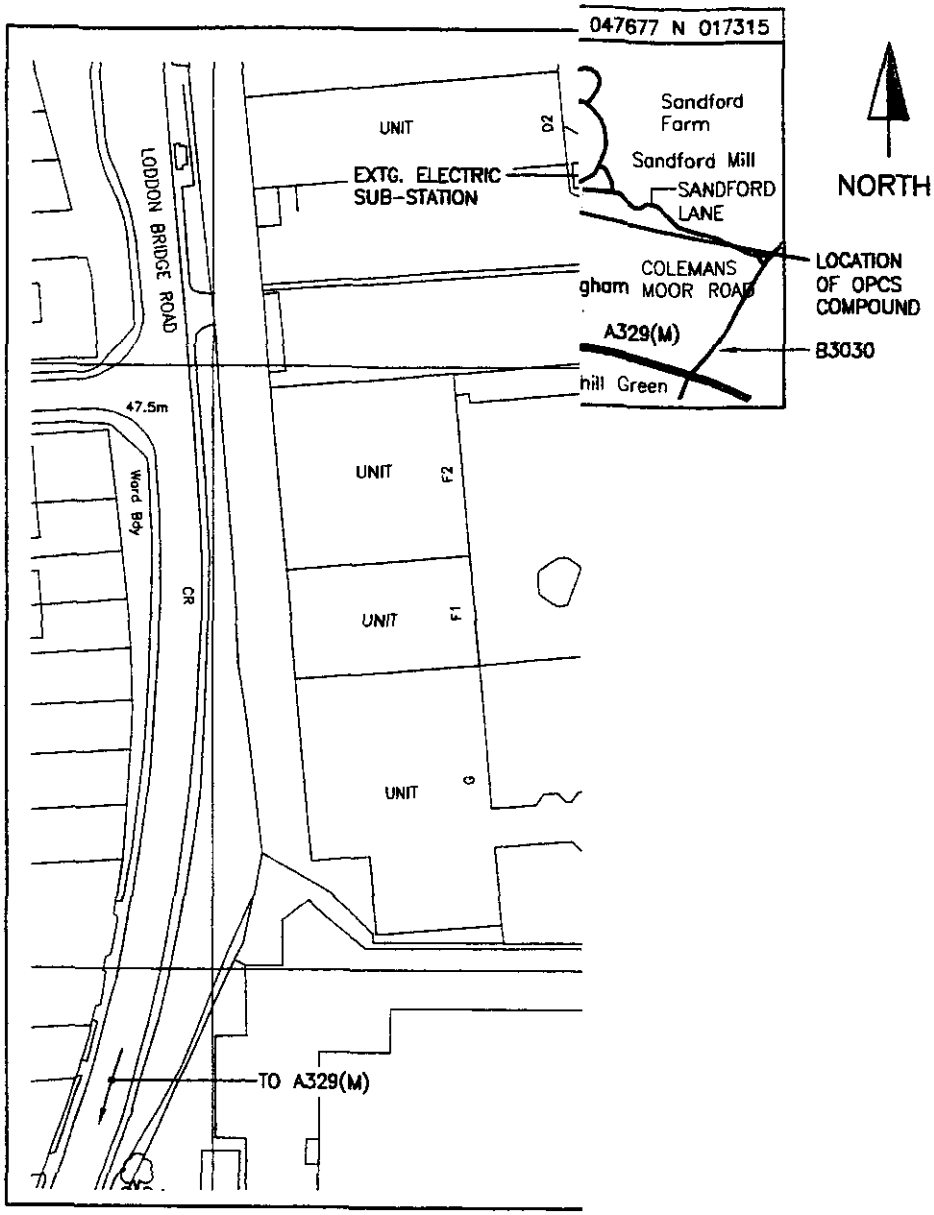

BLOCK PLAN

SCALE 1:1250

30/BRK0088/101

DRAWING NUMBER

UPGRADE Nos	
	MS2: 99126473
-2-ONE	SHA: 99123801 – VODAFONE
NET	

MANSELL

MANSELL SOUTHERN
ROMAN HOUSE NORTHWAY
WALWORTH INDUSTRIAL ESTATE
ANDOVER HAMPSHIRE SP10 5QD
TEL: 01264 333255 FAX: 01264 335577

SCOTT–WHITE & HOOKINS
CONSULTING ENGINEERS
ROMAN HOUSE NORTHWAY
WALWORTH INDUSTRIAL ESTATE
ANDOVER HAMPSHIRE SP10 5QD
TEL: 01264 335533 FAX: 01264 335577

THIS DRAWING DEVIATE

DEVIATIONS:–
1.
2.
3.
4.

SHARE

R657

A

orange

Tudor House
The Royals
55 Victoria Road
London
NW10 6ND
Tel 020 8963 4100
Fax 020 8963 4101

FROM: Heather Morgan

DATE: 21 June 2000

WOODLEY TOWN CONSULTATION SHEET

Application Number: F/2000/1726

Proposal: *Proposed 25 metre high replacement telecommunication mast and associated development..*

32102

Site Address: Western Site Headley Park Industrial Estate, Headley Road East, Woodley, Reading.

Applicant: Orange Pcs Ltd C/O Heritage Planning Ltd.

Your observations are required in respect of this application **by 15/07/2000** .

The committee welcomed the shared use but still expressed serious reservations on the potential health risks and the effects of the prolonged presence of the mast in an area frequented by workers at the adjacent industrial units.

SIGNED: _____ DATE: 19.7.00.

Clerk To Woodley Parish/Town Council.

WORK SHEET FOR : Heather Morgan

Application Number : F/2000/1726

Applicant : *Orange Pcs Ltd C/O Heritage Planning Ltd.*

Location : Western Site Headley Park Industrial Estate, Headley Road East, Woodley, Reading.

Proposal : Proposed 25 metre high replacement telecommunication mast and associated development.

Site Notice Displayed ? : YES [/] NO [ ] DATE 28/6/00 PM

Date of Neighbour Notifications : 21/6/00

Date of Site Visit : 28/6/00

Date Registered : 12/06/2000

Earliest Date for Decision : 15/07/2000

Latest Consultation Date/Site Notice Expiry Date : 15/07/2000

This application will have expired on: 07/08/2000. You need to make a decision 1 day prior to this date for this application to count as determined in less than 8 weeks.

Consultation Responses :

① Env. Health – No objection to the proposal. Further research is being undertaken into possible health implications.

② Telecommunications (NRPB) – No response.

③ Consultations –

[redacted]

Planning History

PD – 15m high mast.

F/2000/0511 – Additional 10m to provide a 25m high mast.
– Approved 28/3/00.

Planning Application

Seeks consent for the removal of an existing 25m high

mast, and the erection of a new 25m mast. This will allow for mast sharing of Orange, Cellnet and One 2 One. [redacted] This will result in the addition of 2 additional cabins, measuring 3.68x 2.7x 2.9 m and 3.72 x 2.52 x 2.9m (w.d.h.) The applicants have also indicated that the 3 operators are seeking to upgrade their equipment to provide for increased capacity and for the 3rd generation of mobile phones. As a result a stronger design of mast is needed which maintaining the latest slim-line design.

Impact on amenity

The mast and associated equipment cabins are to be located within an existing Industrial Estate. The height would be marginally lower than the at previously approved. The mast would be located [redacted] m from the nearest residential properties and would not be visible from these dwellings. The mast would be [redacted] m from the exit in the Industrial Estate and is deemed to be sufficient to ensure the proposal does not appear overdominant. Whilst the lattice mast does not taper as significantly as the previous tower, it is not considered this in itself would be detrimental.

Health and Safety Issues

Environmental Health have raised no objection to the proposal on the basis of impact upon the health of employees. The proposal is very similar to the existing mast and a refusal on the basis of health could not be substantiated

Application Number: F/2000/1726

Appraisal :

Recomendation : Approval: ☑ [redacted]: ☐
(tick appropriate box)

Application Number F/2000/1726
Conditions/~~Reasons for Refusal~~

No	Std Con	Std Reas	Non Std Conditions / ~~Reasons for Refusal~~
①	SC01	SR02	
②			The existing mast approved under F/2000/0511 shall be removed in its entirety upon completion of the replacement mast hereby approved.
			Reason
			To ensure the amenity of the area is not adversely affected and to ensure the removal of redundant facilities.

RECORD OF SITE VISIT

SITE ADDRESS: Western Site Headley Park Industrial Estate Headley Road East Woodley Reading.

APPLICATION NUMBER: F/2000/1726

OFFICER: Heather Morgan

DATE OF SITE VISIT: 28/6

1 SITE/STATUTORY NOTICE DISPLAYED ? No, but neighbours notifications

2. DESCRIPTION OF SURROUNDINGS Industrial Estate.

3. DESCRIPTION OF SITE/BUILDING Existing main building & compound (consents granted last year)

4. RELATIONSHIP TO ADJOINING PROPERTIES N/A

5. SITE CONSTRAINTS

TREES N/A

ACCESS/PARKING N/A

LEVELS N/A

BOUNDARY TREATMENT N/A

OTHERS N/A

Received by Wokingham District Council

Application No: F/2000/1726

Proposal:
Proposed 25 metre high replacement telecommunication mast and associated development.

Location:
Western Site Headley Park Industrial Estate, Headley Road East, Woodley, Reading.

The application is available for inspection at Wokingham District Council's *offices during the following times:*

PLANNING DEPARTMENT, SHUTE END, WOKINGHAM TEL (0118) 974 6428
8.30 - 5.00 Monday - Thursday & 8.30 - 4.00 Friday

WOODLEY LIBRARY HEADLEY ROAD WOODLEY (9.30am - 7.00pm Mon, Thurs & Fri. 9.30am - 5.00pm Tues, 9.30am - 1.00pm Saturday. closed all day Wednesday). If you intend to view this application at Woodley Library (see details above) please allow 4 days from the date of this notice for delivery of plans.

Comments should be sent in writing QUOTING THE APPLICATION NUMBER to the Case Officer Heather Morgan P.O. Box 157 Council Offices, Shute End, Wokingham Berkshire, RG40 1WR to arrive on or before 15/07/2000. Written comments submitted will become available for public inspection.

In view of the very large number of planning applications and letters of comment received, it will not normally be possible for an individual reply to observations made. However any comments will be taken into account when the application is determined and you will be notified of the decision.

Head Planning and Transportation

21 June 2000

Tel: (0118) 974 6446

Date: 18 | 2 | 00

My ref: F/2000/1726

Environmental Services Department
Planning Services
P.O. Box 157
Shute End, Wokingham
Berkshire RG40 1WR
Tel: (0118) 974 6000
Fax: (0118) 974 6484
Minicom No: (0118) 974 6991
DX: 33506 – Wokingham

CONFIDENTIAL

Councillor A Clifford
45 Colemansmoor Road
Woodley
RG5 4DG

Dear Councillor

Application Number: F/2000/1726
Western Site Headley Park Industrial Estate, Headley Road East, Woodley, Reading.
Proposed 25 metre high replacement telecommunication mast and associated development.

I write to let you know that the above mentioned application has been recommended for APPROVAL: ☑ [redacted] ☐ under delegated powers.

If you have any questions please do not hesitate to contact **Heather Morgan** on **(0118) 974 6446**. If you then feel the application needs to be transferred to the next available Development Control Sub-Committee for decision please fill in the form below.
This form must be received no later than 28 | 2 | 00

Yours faithfully

John Mitchell
Development Control Manager

LISTING FORM
Case officer: **Heather Morgan** Application Number: **F/2000/1726**
Western Site Headley Park Industrial Estate, Headley Road East, Woodley, Reading.
Proposed 25 metre high replacement telecommunication mast and associated development.

Transfer: Yes ☐ No ☐
Reason for Transfer:

_____

_____

Signed: _____ Date: _____

Councillor A Clifford

NB. It would be helpful for speedy decision making if you could respond, even if you do not wish this application to be transferred.

Tel: (0118) 974 6446

Date: 18/2/00

My ref: F/2000/1726

Environmental Services Department
Planning Services
P.O. Box 157
Shute End, Wokingham
Berkshire RG40 1WR
Tel: (0118) 974 6000
Fax: (0118) 974 6484
Minicom No: (0118) 974 6991
DX: 33506 – Wokingham

CONFIDENTIAL

Councillor D Thair
13 Tennyson Road
Woodley
RG5 3RH

Dear Councillor

Application Number: F/2000/1726
Western Site Headley Park Industrial Estate, Headley Road East, Woodley, Reading.
Proposed 25 metre high replacement telecommunication mast and associated development.

I write to let you know that the above mentioned application has been recommended for APPROVAL: ☑ [redacted]: ☐ under delegated powers.

If you have any questions please do not hesitate to contact **Heather Morgan** on **(0118) 974 6446**. If you then feel the application needs to be transferred to the next available Development Control Sub-Committee for decision please fill in the form below.
This form must be received no later than 28/2/00

Yours faithfully

John Mitchell

John Mitchell
Development Control Manager

LISTING FORM

Case officer: **Heather Morgan** Application Number: **F/2000/1726**
Western Site Headley Park Industrial Estate, Headley Road East, Woodley, Reading.
Proposed 25 metre high replacement telecommunication mast and associated development.

Transfer: Yes ☐ No ☐
Reason for Transfer:

_____

_____

Signed: _____ Date: _____

Councillor D Thair

NB. It would be helpful for speedy decision making if you could respond, even if you do not wish this application to be transferred.

Tel: (0118) 974 6446

Date: 18 | 7 | 00

My ref: F/2000/1726

Environmental Services Department
Planning Services
P.O. Box 157
Shute End, Wokingham
Berkshire RG40 1WR
Tel: (0118) 974 6000
Fax: (0118) 974 6484
Minicom No: (0118) 974 6991
DX: 33506 – Wokingham

CONFIDENTIAL

Councillor C E Clacey
26 Southlake Crescent
Woodley
RG5 3QJ

Dear Councillor

Application Number: F/2000/1726
Western Site Headley Park Industrial Estate, Headley Road East, Woodley, Reading.
Proposed 25 metre high replacement telecommunication mast and associated development.

I write to let you know that the above mentioned application has been recommended for APPROVAL: ☑ [redacted]: ☐ under delegated powers.

If you have any questions please do not hesitate to contact **Heather Morgan** on **(0118) 974 6446**. If you then feel the application needs to be transferred to the next available Development Control Sub-Committee for decision please fill in the form below.
This form must be received no later than 28 | 7 | 00

Yours faithfully

John Mitchell

John Mitchell
Development Control Manager

LISTING FORM

Case officer: **Heather Morgan** Application Number: **F/2000/1726**
Western Site Headley Park Industrial Estate, Headley Road East, Woodley, Reading.
Proposed 25 metre high replacement telecommunication mast and associated development.

Transfer: Yes ☐ No ☐
Reason for Transfer:

_____

_____

Signed: _____ Date: _____

Councillor C E Clacey

NB. It would be helpful for speedy decision making if you could respond, even if you do not wish this application to be transferred.

WOKINGHAM DISTRICT COUNCIL

MEMORANDUM

From:	Joanne Ellis, Environmental Health	My Ref:	JPE/lw/20001183
To:	Heather Morgan, Planning	Your Ref:	F/2000/1726
		Date:	27 June 2000

PROPOSED 25 METRE HIGH REPLACEMENT TELECOMMUNICATION MAST AND ASSOCIATED DEVELOPMENT

WESTERN SITE, HEADLEY PARK INDUSTRIAL ESTATE, HEADLEY ROAD EAST, WOODLEY, READING

I have evaluated the above proposals and have no objections to planning consent but have the following comments to make in relation to this proposal:

There have been questions raised as to the possibility of adverse health effects from electromagnetic radiation from telecommunication base stations and their positioning in relation to residential development and, in particular schools.

The National Radiological Protection Board (NRPB) was established by the Radiological Protection Act 1970 and is responsible for conducting research and providing advice and services for protection against ionising and non-ionising radiation's in the U.K. They are continually reviewing the vast body of world-wide research on the subject.

The NRPB's current advice is that there is no proven human health risks from these installations. This position is confirmed by the Chartered Institute of Environmental Health and pressure groups such as Powerwatch network . There are however countries and areas of the world where precautionary measures have been adopted , e.g. New Zealand Ministry of Education has issued a policy statement preventing cellular phone antennas from being sited at state schools in the future.

Further research is currently being undertaken into possible health implications although to date no definitive statement can be made.

The NRPB have set up an Advisory Group to look into this matter. This Group has concluded, in reference to buffer zones for sensitive developments, that there is neither a clear basis from which to derive a meaningful assessment of risk , nor is there any indication of how putative risk might vary with exposure. Thus there is no scientific justification for seeking to reduce exposure in these situations and that a decision to do so must be based on social and economic rather than scientific grounds.

The Chartered Institute of Environmental Health's current policy is as follows :

"The CIEH with regard to overhead and buried high voltage power lines, electricity sub-stations, wind generators, microwave and radio transmitters, mobile telephone base stations and other similar installations emitting electro magnetic radiation (EMR) in close proximity to dwellings considers :

a) That the effect on human health based on current scientific evidence is insignificant and not proven.
b) That there is no convincing national or international scientific research linking Electromagnetic Radiation and deterioration in human health.
c) That a precautionary approach to restricting building or access near such installations (apart from physical safety barriers) cannot be sustained on health grounds alone and if adopted must be based on access, amenity, and public acceptability considerations.
d) That local authorities should adopt a policy on how to address questions from the public on Electromagnetic radiation from such sources."

Please contact me if you require further information.



Joanne Ellis
Senior Environmental Health Officer

WOKINGHAM D.C. DEVELOPMENT CONTROL

Start date: 12 JUN 2000

Officer: HM | Application No. F/2000/1726

Map No. 42 Site ...001...

Easting: ..... Flood Pln .....

Northing: ..... Mineral .....

Level: ☐ Sub Committee ☑ Delegated ☐ Sec. State

☐ Incorrect Fee ☐ Invalid ☐ PD

Description:

(F.) PROPOSED 25 M HIGH REPLACEMENT TELECOMMUNICATION MAST & ASSOCIATED DEVELOPMENT

Location: WESTERN SITE, HEADLEY PARK INDUSTRIAL ESTATE, HEADLEY RD

Parish: WOODLEY Ward: ~~London~~ 21.6.2000

Applicant: ORANGE PCS LTD

Fee Received 95-00 (8) Required ..... Additional ..... Refund .....

Enforcement Section to be notified ☐ tick if required

Additional information required for validation

		Reason	Requested	Received
1	1:2500 OS location plan showing property edged in blue/red			
2	1:500 block plan showing existing & proposed dev. + adj. Properties			
3	Forms unsigned			
4	Correct S 66 certificate			
5	Elevation plans	ELEVATIONS OF LADDERS? ELEVATIONS OF DISHES - EACH TYPE IF DIFFERENT.		
6	Floor plans			
7	Metric scale disclaimer			
8	Encroachment letter			
9	Miscellaneous			

APPLN NO. _____

ACTION REQUIRED BY DEVELOPMENT CONTROL

Conservation Area .....

Listed Building 1 2 2*

Advertisement Required .....

Date Site Notice Sent : 21.6.2000 Parish Council Informed - YES / NO

INTERNAL CONSULTATIONS

Building Control : .....
Landscape .....
Trees .....
Conservation Officer .....
Environmental Health ✓ .....
Housing .....
Leisure & Cultural services .....
Public Rights of Way .....
Property .....
District Secretary (only if called in by SOS) .....
Policy & Plans .....
Strategic Planning (JSPU) .....
Minerals (BABTIE) .....
Archaeological Site (BABTIE) : .....
Education .....
Social Services .....
Highways .....

EXTERNAL CONSULTATIONS

Adjacent D P A : .....
Adjacent Parish : .....
Southern Electricity Board .....
British Gas .....
PSA Oil Pipeline .....
Transco : .....
Environment Agency .....

Rail Track .....
Police Arch. Liaison Officer .....

HERITAGE BODIES

The Georgian Group .....
Ancient Monuments Society .....
Council for British Arch. .....
RCHME .....
Telecommunications (NRPB) ✓ .....
Sport England : .....

OTHERS:

NO PRE-APPS.

NEIGHBOURS:

S/N + ALLIED BAKERIES - VISCOUNT WAY. ✓
1 VISCOUNT WAY.
UNITS D1, D2, F1, F2 + G HEADLEY RD EAST

HERITAGE PLANNING

TOWN PLANNING AND DEVELOPMENT CONSULTANCY

Heritage House, 120 Eastwood Drive, Highwoods, Colchester, Essex CO4 4SL
Tel: 01206 854574 ○ Fax: 01206 854444 ○ Mobile: 07885 136090
E-mail: heritage.planning@aspects.net

12 JUN 2000* 1726

Ms Heather Morgan
The District Planning Officer,
Wokingham District Council,
Planning Department,
PO Box No. 157, Council Offices,
Shute End, Wokingham,
Berks. RG40 1WR.

9 June 2000

Dear Ms Morgan

Proposed Erection of a 25m High Replacement Telecommunication Mast and Associated Development at Orange Base Station, Western Site, Headley Park Industrial Estate, Woodley, Reading to facilitate a Mast Share with One 2 One and Cellnet (Orange Ref. BRK/0088)

Please find enclosed a planning application for the above development, comprising six copies of each of the following items:

1) Application form.
2) Section 66- Certificate B.
3) Cheque for £95.00.
4) Site Plan @ 1.250 scale, Dwg. No. 30/BRK/0088/SHA/01/A.
5) Site Layout and Elevations, Dwg. Nos. 30/BRK/0088/SHA/02/E, 04/C, & 06.
6) Transmission Dishes, Dwg. No. 10/1170/1X.
7) Mercury Cabin Dwg. No. STD/A3/L.
8) Mercury Cabinet Dwg. No. MPC/IDS/14002308.
9) Cellnet Cabin Dwg. No. P/EQU/200/aB.
10) Cellnet Meter Cabinet, Dwg. No. P/EQU/600/6
11) Supporting Statement.

I trust this revised proposal will receive your full support, but should you wish to discuss any aspect of this submission, please do not hesitate to contact me.

Yours sincerely,

B.R. Pooley.

Encs.

HERITAGE PLANNING

TOWN PLANNING AND DEVELOPMENT CONSULTANCY

Heritage House, 120 Eastwood Drive, Highwoods, Colchester, Essex CO4 4SL
Tel: 01206 854574 • Fax: 01206 854444 • Mobile: 07885 136090
E-mail: heritage.planning@aspects.net

12 JUN 2000* 1/26

SUPPORTING STATEMENT

-ooOoo-

Proposed 25m High Replacement Telecommunications Mast and Associated Development

at

Orange Telecommunications Site, Western Site, Headley Park Industrial Estate Woodley, Reading

for

Orange PCS Ltd., One 2 One and Cellnet

-ooOoo-

Our Ref: BRK/0088

June 2000

CONTENTS:

1. INTRODUCTION

2. THE APPLICATION SITE

3. BACKGROUND TO THE PROPOSAL

4. PLANNING POLICY FRAMEWORK

5. SUMMARY AND CONCLUSIONS

1. INTRODUCTION

1.1 This statement is in support of a mast share application submitted on behalf of Orange Personal Communications Services Ltd. for a replacement telecommunications facility comprising the following components:-

Generally
25m high slim-line mast to replace the existing tower which was proposed to be extended by 10m to 25m under Application No: F/2000/0511, granted planning permission on 28 March 2000.

Orange PCS Ltd.
Six antennae located at 23.4m pm a circular work platform;
Four x 0.3 metre diameter transmission dishes @ 23.4m;

One2One
Six antennae located at 20.3m.
One x 0.3m dish and three 0.6m dishes at 20.3m
One cabin 3.68m x 2.70m x 2.90m high.

Cellnet
Six antennae located @ 15.2m.
One x 0.600m dish located @ 14.8m.
One cabin 3.72m x 2.52m x 2.90 high.

1.2 The replacement mast will be of steel construction, and the associated cabins/cabinets will be constructed of either glass fibre or sheet metal and finished in colours to match the existing.

1.3 The facility will be unmanned and, once developed, access will only be required for routine servicing and emergencies.

2. THE APPLICATION SITE

2.1 The application site is located centrally within the extensive Headley Park Industrial Estate to the south of Headley Road East at Woodley.

2.2 Access to the site is obtained through the industrial estate (as shown on the submitted plans) to the existing compound which is enclosed by pallisade security fencing.

2.3 The proposal seeks to replace the existing mast which will then be shared by three operators within the existing compound.

3. BACKGROUND TO THE PROPOSAL

3.1 The applicants are licensed telecommunications code systems operators under the Telecommunications Act 1984. To meet their licence requirements, each company must establish a network which provides good quality coverage for mobile communications and for the use of equipment within buildings; and the capacity of the system must be able to meet the reasonable demands likely to be placed upon it.

3.2 The proposed facility will form an integral part of the networks being established by each company and provides mobile telecommunication services using digital technology. this provides the clearest and most secure form of telephony, with an extensive range of services including telephone services for 'car phones and portable phones', message and paging systems, facsimile and data transference. However, unlike older systems the services offered are proving to be attractive to domestic subscribers as well as business users.

3.3 Each telecommunication network uses cellular technology which operates by dividing the country into a series of overlapping cells, which vary in size, depending on likely levels of usage and the topography of the area. To ensure proper mobile communications, the networks must form an unbroken blanket over the country, otherwise subscribers will experience dropped calls and loss of service, which are the most frustrating problems associated with mobile communications.

3.4 Cells are operated by a base transceiver station, to which individual handsets are linked by radiowave transmissions. As the mobile subscriber moves from one cell to another, the calls are automatically transferred of "handed over" to ensure continuous communication.

3.5 The facilities have to be located at high points to provide sufficient radio coverage otherwise the coverage can be affected by intervening hills, trees, buildings or other structures resulting in loss of the signal and dropped calls. it is the radio antennae which will provide the radio coverage to subscribers.

3.6 The height is also required in order to facilitate fixed links by microwave transmission to adjoining sites which in turn are linked to the national and international telecommunications network. The fixed links will be obtained by the radio dishes which operate on a direct line of sight basis (i.e. with a clear view to dishes on corresponding installations).

The Need for the Proposal

3.7 The Companies are still in the process of establishing their networks and, if they are to meet their licence requirements set out above, have to spread their network over most centres of population, large and small, and also the principal highway network at the very least.

3.8 The existing telecommunications site is ideally located to meet the future operational needs of three operators on a single mast share site and the owner has agreed to accommodate the operator's requirements for a replacement mast of the height required.

3.9 The use of the replacement mast will enable the number of additional towers on green field sites to be kept to an absolute minimum in accordance with both national and local planning policies, which seek to safeguard the appearance of the countryside.

3.10 Coloured Planet Plots previously submitted on behalf of One2One and Cellnet clearly illustrated the "holes" in their networks and how the proposed development would provide effective coverage.

Third Generation Licences

3.11 All three operators are now also seeking to upgrade their equipment to provide for increased capacity and for the third generation of mobile phones following their successful acquisition of Government licences. The third generation phones will use U.M.T,S. – Universal Mobile Telephone System, which will allow users to access information using nothing but voice recognition.

3.12 The need for additional equipment has resulted in the requirement for a stronger design of mast, capable of accommodating the additional loadings, whilst maintaining the latest slim-line design.

3.13 The proposed mast will in fact be slightly lower in height that the previous application, which measured 27.7m to the top of the vertically mounted antenna.

4. PLANNING POLICY FRAMEWORK

4.1 PPG8: Telecommunications (Dec. 1992) states in Paragraph 5 that it is the Government's general policy to facilitate the growth of new and existing systems whilst taking account of protection policies for urban and rural areas.

4.2 **Mast Sharing (Paragraph 27) states:-**
"The Government attaches considerable importance to keeping to a minimum the number of radio and telecommunication masts and of the sites for such installations. The sharing of masts will help to achieve this, where practicable, as well as the use of existing buildings to site new antennae."

4.3 The use of the existing telecommunication site accords entirely with Government policy with the replacement mast required in order to accommodate three operators' equipment.

4.4 The Wokingham District Local Plan dated 1997 contains the following policy relating to telecommunications:

Policy WIC14: Assessment of Proposals for Telecommunication Development

Planning permission will be granted for telecommunications development provided that it is in accordance with Policy TC1 of the Berkshire Stucture Plan 1991 – 2006. In addition, the Council will consider 'Prior Notification' submissions in accordance with Policy WOS3 and other relevant policies and provision of this plan. The council will also seek to secure the removal of any telecommunications apparatus that is no longer required for its original purpose.

4.5 The submitted proposals accord with these policy requirements being a mast share proposal on an established telecommunications site within an industrial estate screened by existing trees, shrubs and hedgerows and set a considerable distance from the nearest housing.

① HEADLEY PARK INDUSTRIAL ESTATE - WEST COURT

ADDRESS HEADLEY ROAD EAST PARISH WOODLEY

PLOT No. AREA 10 PHASE II ORD. SHEET No. SW. 7673 42

BUILDER 08308

Plan No.	Applicant		Description of Development	Date of Decision	Decision
O/119/64	WOODLEY ASSOC.		O/L. COMPREHENSIVE DEV.	28.2.66	N/A R
446/73	ADDEST		W/HOUSE DEV. AREAS	8.2.74	REFUSED R
449/73	"		9 & 10		" "
18312	"		12 L.IND. UNITS, OFFICE ACC.	21.10.82	N/A CIA
BR 20602	"		& "	17.6.83	APP N/A
22795	"		13 "	5.1.85	N/A CIA
BR24256	"		13 L.IND./WAREHOUSE UNITS	4.6.85	APP N/A
23524	"		EXTERNAL LIGHTING SCHEME	19.6.85	N/A CIA
BRA 316	SCHAFFNER EMC LTD	11	INT. PARTITIONING TOILET BLOCKS	3.3.86	APP N/A
BRA 1683	PARADYNE LTD.	16	SIDERACK PLATFORM	10.10.86 25.11.86	REF APP
28[illegible]8					
24338	CAR GEARS LTD	14	SERVICING & REPAIR	20.1.88	CIA
BRA 3684	SCHAFFNER EMC	11	RAISED FLOOR AREA	30.1.88 12.11.91	REF APP

DATE OF COMPLETION

MINISTRY DECISION

SPECIAL ORDERS

DRAINAGE

0910743 2223	CAR GEARS	14	M.O.I. TESTING FACILITIES	14.12.88	CIA

② HEADLEY PARK IND. ESTATE - WEST COURT

ADDRESS PARISH WOODLEY

PLOT No. ORD. SHEET No. 42

BUILDER

Plan No.	Applicant		Description of Development	Date of Decision	Decision
CA 6818	VOTEY	13	MEZZ. FLOOR	14.6.89	REF
CA [illegible]48	"	13	"	6.6.89	APP
CA 7862	ANCHOR ALLEY	19	"	25.9.89	APP
BRA 9813	A&I PARADYNE	16	EXT. OF OFFICE AREA WITHIN EX. BUILDING	2.1.91	APP
2000/0359	Norwich Union Investment Management		Non-illum ind estate signs		

DATE OF COMPLETION

MINISTRY DECISION

SPECIAL ORDERS

DRAINAGE

2.5.91 UNIT 23 - KENNEDY INT. LTD. UNIT 21 - ZAKRON EUROPE LTD - 2.11.93

1769a

WOKINGHAM DISTRICT COUNCIL
PLANNING APPLICATION

PART 1

APPLICATION FOR PERMISSION TO CARRY OUT DEVELOPMENT - TOWN AND COUNTRY PLANNING ACTS

Please answer ALL QUESTIONS in BLOCK LETTERS. If a question is not applicable, answer N/A in space. Please submit SIX copies of this form and plans to:-

THE DISTRICT PLANNING OFFICER
WOKINGHAM DISTRICT COUNCIL
PLANNING DEPARTMENT
P O Box No. 157
COUNCIL OFFICES
SHUTE END
WOKINGHAM
BERKSHIRE, RG40 1WR

FOR OFFICE USE ONLY

12 JUN 2000 1726

1.	APPLICANT'S NAME	Orange PCS LTD
	ADDRESS	Black Arrow House, 2-3rd Floor 2 Chandos Road, London
	POST CODE	NW10 6NF PHONE
2. If the applicant has an agent, all correspondence will be sent to the agent	AGENT'S NAME	Heritage Planning Ltd
	ADDRESS	120 Eastwood Drive, Highwoods Colchester, Essex
	POST CODE	CO4 4SL PHONE 01206-854574
3. On the plans show the SITE outlined in RED Show also OTHER land in the applicant's ownership or control in BLUE.	SITE LOCATION	Orange Base Station Western Site, Headley Park Industrial Estate Woodley, Reading
4. WHAT IS THE APPLICATION FOR ? Give brief details and state for what purpose this site and any buildings will be used.		Proposed 25m High Replacement Telecommunication mast and associated development to facilitate a site share with One 2 One and Cellnet
5. Give the area in hectares or part of a hectare	AREA OF SITE	0.09 hectares
6. State the applicant's interest in the land e.g. owner, prospective purchaser, lessee	OWNERSHIP	Lessee
7. List all the plans and drawings submitted with the application	PLANS/DRAWINGS	See covering letter

8. DOES THE APPLICATION INVOLVE ANY OF THE FOLLOWING ?

Tick the boxes(x)

CHANGE OF USE	☐	REDEVELOPMENT	☐
ERECTION OF NEW BUILDING	☑	ALTERATION or EXTENSION	☑

9. WHAT TYPE OF APPLICATION IS THIS ? Tick one box only

OUTLINE PERMISSION	☐	See question 10
FULL PERMISSION	☑	
APPROVAL OF DETAILS/RESERVED MATTERS	☐	State relevant outline permission number Also complete Question 10
TEMPORARY PERMISSION	☐	State period required
RELAXATION OF CONDITIONS	☐	State relevant application number Conditions to be relaxed

10. IF THIS IS AN OUTLINE APPLICATION OR AN APPROVAL OF RESERVED MATTERS, which details, if any, do you wish to be considered as part of this application ?

		SITING	☐
EXTERNAL APPEARANCE	☐	DESIGN	☐
MEANS OF ACCESS	☐	LANDSCAPING	☐

1769b

11. WHAT IS THE EXISTING USE OF THE LAND AND/OR BUILDING(S) e.g. residential, industrial, etc. If the site is vacant say so, and also state its previous use and when that ceased.

Telecommunications/Business Use

12. DOES A PUBLIC RIGHT OF WAY CROSS OR ABUT THE SITE OR THE PROPOSED ACCESS? YES/NO — If yes, show existing route(s) and any proposed alternatives on the plans

13. ARE THERE ANY TREES ON THE SITE? IF YES, ARE ANY TO BE FELLED? YES/NO — If yes, please show their positions, spread and species on the plans and which, if any, are to be felled.

14. STATE EXTERNAL MATERIALS TO BE USED.

To match existing

15. HOW WILL THE SITE BE ENCLOSED? Say whether walls, fences or hedges, and give height, colour and materials. If the site is divided into plots, say how each is to be enclosed.

As existing

16. HOW WILL SURFACE WATER BE DISPOSED OF?

To existing system

17. HOW WILL FOUL SEWAGE BE DISPOSED OF?

To existing system YES/NO

If no, please give details: None

18. WHAT ARE THE ACCESS ARRANGEMENTS?
AS EXISTING
AS PROPOSED
Give details of pedestrian and vehicular access

Yes

19. HAS PROVISION BEEN MADE FOR THE DISABLED? See notes for applicants

N/A

20. IF THIS PROPOSAL INVOLVES RESIDENTIAL DEVELOPMENT OR THE LOSS OF RESIDENTIAL UNITS, COMPLETE THE FOLLOWING TABLE

	No. OF DWELLINGS/HABITABLE ROOMS PROPOSED	TO BE RETAINED	TO BE LOST
HOUSE	/ *	/ *	/ *
BUNGALOW	/ *	/ *	/ *
FLAT/MAISONETTE	/ *	/ *	/
OTHER	/ *	/ *	/ *

* STATE No. OF HABITABLE ROOMS

21. DOES THE PROPOSAL INVOLVE ANY NON-RESIDENTIAL BUILDING OR USE? YES/NO — If YES, complete Part 2 of the form

22. DOES THE PROPOSAL INVOLVE THE WINNING, WORKING OR PROCESSING OF MINERALS, THE DISPOSAL OF MINERAL WASTE, OR THE DEPOSIT OR PROCESSING OF REFUSE AND WASTE MATERIALS? YES/NO — If YES, please ask for and complete Part 3 of the form

23. STATE THE FEE ENCLOSED WITH THIS APPLICATION The current scale of fees is enclosed. If you believe a reduced fee or no fee is payable, say why.

£95.00

I hereby apply for permission in respect of the particulars described above and in the attached plans and drawings. If planning permission is granted, the development must be carried out strictly in accordance with the approved plans. Failure to do so could result in enforcement action being taken. Permission under the Town & Country Planning Acts does not obviate the possible need to apply for Building Regulations approval.

SIGNED Bruce Poole ON BEHALF OF Orange PCS Ltd DATE 9 June 2000

Before submitting the application check that it is complete, that all questions have been answered and that the site boundary and the new work are clearly edged in red on the plans. Every application must be accompanied by the appropriate certificate and fee. See "NOTES TO HELP APPLICANTS".

1769c

PLANNING APPLICATION

PART 2

This part of the form need only be completed if the application involves non-residential development. Please answer all questions in print or block letters. If the answer is not applicable, write N/A in the space. You may wish to amplify your answers in a covering letter.

24. STATE THE GROSS FLOOR SPACE (by external measurement) OF ALL BUILDINGS TO WHICH THIS APPLICATION REFERS. Please give all floor areas in SQUARE METRES.

	USE CLASS	Existing floor space		Proposed additional floorspace created by	
		Retained in existing use	Lost by change of use or demolition	New building	Change of use
A1	SHOPS				
A2	FINANCIAL AND PROFESSIONAL SERVICES				
A3	FOOD AND DRINK				
B1(a)	OFFICE (other than A2)				
B1 (b)	RESEARCH AND DEVELOPMENT				
B1 (c)	LIGHT INDUSTRIAL				
	GENERAL INDUSTRIAL				
B3-7	SPECIAL INDUSTRIAL				
B8	STORAGE OR DISTRIBUTION				
C1	HOTELS AND HOSTELS				
C2	RESIDENTIAL INSTITUTIONS				
D1	NON-RESIDENTIAL INSTITUTIONS				
D2	ASSEMBLY AND LEISURE				
OTHER	Please Specify Telecommunications	12.25		10.75 + 9.25	
OTHER	Please Specify				
	TOTAL	12.25		20	

25. IF C1 OR C2 USE IS PROPOSED, PLEASE STATE NUMBER OF BED SPACES

WHAT PROVISION IS BEING MADE FOR PARKING?

	Cars	Lorries
Existing	1	–
Proposed	1	–

27. DESCRIBE THE ACTIVITY OR PROCESSES TO BE CARRIED ON
Please provide details of any equipment, plant or machinery to be installed and any end products. You may wish to amplify your answers in a covering letter.

Telecommunications base station.

28. WHO WILL OCCUPY THE PREMISES?
a) Give the name and current operating address of the proposed occupier
b) Will these premises be vacated?

Orange PCS Ltd, One 2 One, & Cellnet.

29. IF KNOWN, HOW MANY PEOPLE ARE LIKELY TO BE EMPLOYED ON SITE AFTER COMPLETION OF THE DEVELOPMENT?

Existing Staff	Transferred Staff	New Staff	Total
0	0	0	0

30. DOES THE PROPOSAL INVOLVE THE USE OR STORAGE OF ANY OF THE HAZARDOUS SUBSTANCES LISTED IN THE NOTES?
If so, state this material, the quantity and method of storage.

No

Before submitting the application check that it is complete, that all questions have been answered and that the site boundary and the new work are clearly edged in red on the plans. Every application must be accompanied by the appropriate certificate and fee. See "NOTES TO HELP APPLICANTS".

1789/a

SECTION 66 CERTIFICATE

Application No.

Please fill in both Certificate A, B, C or D and the Agricultural Holdings Certificate. Delete sections not relevant.

(a) "Owner" means a person having a freehold interest or leasehold interest the unexpired term of which is not less than 7 years.

CERTIFICATE A

I certify that:

at the beginning of the period of 21 days ending with the date of the accompanying application, nobody, except the applicant, was the owner of (a) of any part of the land to which the application relates.

OR

CERTIFICATE B

I certify that:

I have/~~The applicant has~~* given the required notice to everyone else who, at the beginning of the period of 21 days ending with the date of the *accompanying application was the owner (a) of any part of the land to which* the application relates, as listed below.

Owner's(a) name	Address at which notice was served	Date on which notice was served
L.C.P. Securities Ltd	c/o London & Cambridge Properties Millbank Tower Millbank LONDON SW1P 4QP	9 June 2000

+ See Note (a) to Certificate A

OR

CERTIFICATE C

I certify that

- I/The applicant* cannot issued a certificate in accordance with either paragraph (a) or paragraph (b) of Section 66(1) of the Act in respect of the accompanying application.

- I have/The applicant has* given the required notice to the persons specified below, being persons who at the beginning of the period of 21 days ending with the date of the application were owners (a) of any part of the land to which the application relates.

Owner's(a) name	Address at which notice was served	Date on which notice was served

(b) Insert description of steps taken.

- I have/~~The~~ applicant has* taken all reasonable steps open to me/him/her* to find out the names and addresses of the other owners (a) of the land, or of a part of it, but have/has* been unable to do so. These steps were as follows:

(b) .....

.....

(c) Name of local newspaper circulating in the area where the land is situated.

- Notice of the application as attached to this Certificate, has been published in the (c) .....

(d) Date of publication (which must be not earlier than the beginning of the period of 21 days ending with the date of the application) (d) .....

1789/b

CERTIFICATE D

I certify that

● I/The applicant cannot issue a certificate in accordance with paragraph (a) of Section 66 of the Act in respect of the accompanying application.

OR

● I/The applicant have/has taken all reasonable steps open to me/him/her to find out the names and addresses of everyone else who, at the beginning of the period of 21 days beginning with the date of application was the owner (a) of any part of the land to which the application relates, but have/has been unable to do so. These steps were as follows:

(b) . . . . . .

. . . . . .

(b) Insert description of steps taken

(c) Insert name of local newspaper circulating in the area where the land is situated.

(d) Insert date of publication (which must not be earlier than the beginning of the period of 21 days ending with the date of the application).

● Notice of the application as attached to this Certificate, has been published in the (c) . . . . . .

on (d) . . . . . .

ALL APPLICANTS MUST COMPLETE THIS SECTION

If any of the site is part of an *area of land which is let or* there is an agreement to let the land for agricultural purposes to a tenant, it may be an *agricultural holding. Further* advice may be obtained from the Department.

Agricultural Holdings Certificate

One or other section must be crossed through as not applicable.

If the applicant is the sole agricultural tenant he or she must delete the first alternative and insert "not applicable" as the information required by the second alternative.

● None of the land to which the application relates is, or is part of, an agricultural holding.

OR

● I have/The applicant has given the required notice to every person other than my/him/herself who, at the beginning of the period of 21 days ending with the date of the application, was a tenant of an agricultural holding on all or part of the land to which the application relates, as follows:

Tenant's name	Address at which notice was served	Date on which notice was served

Signed . . . . . (d) Poole

On behalf of . . . Orange PCS Ltd . . . . . .

Date 9 June 2000

. . . . . (c) and

TOWN AND COUNTRY PLANNING ACT, 1990
TOWN & COUNTRY PLANNING GENERAL DEVELOPMENT ORDER 1988
Certificate under Section 66

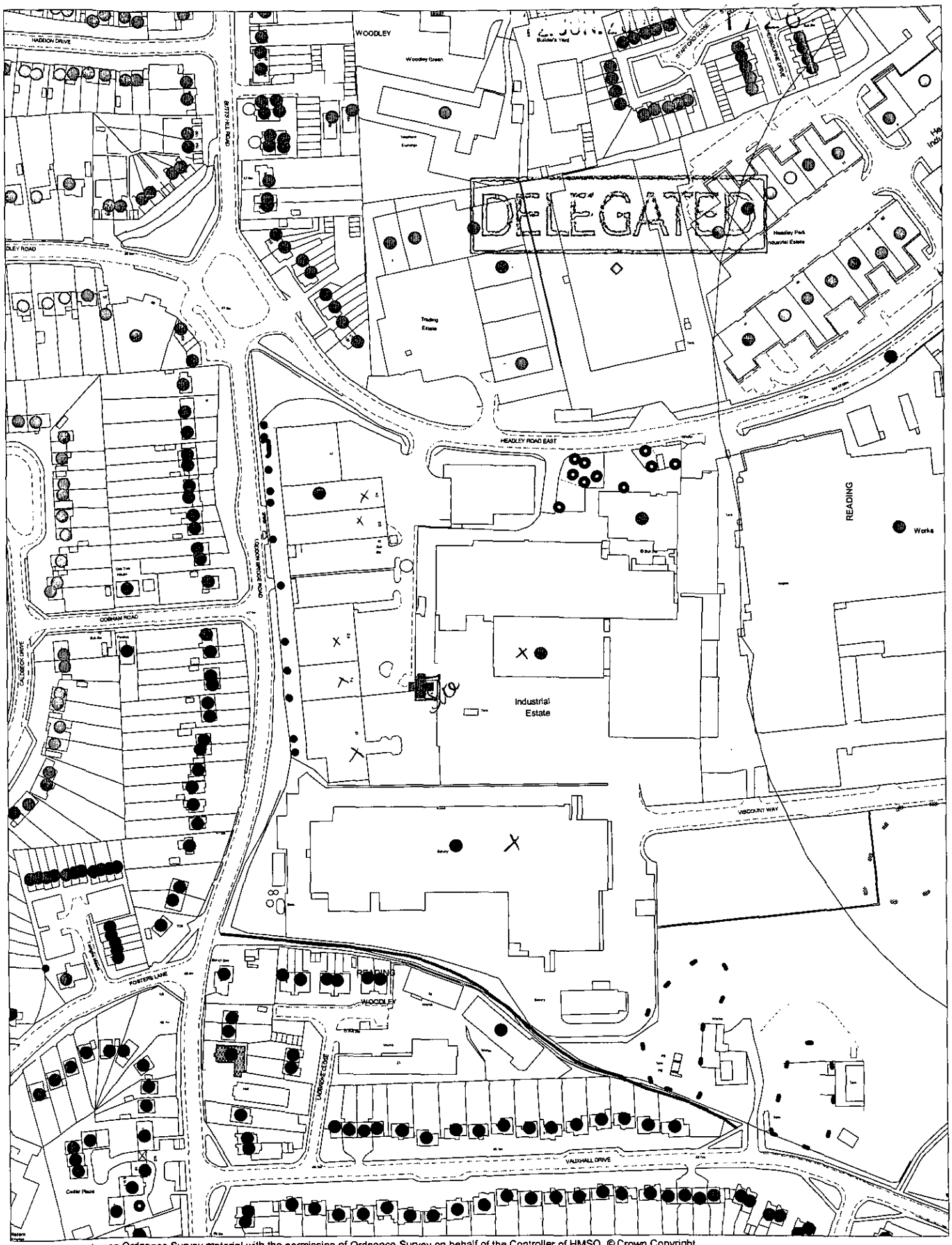

This map is based upon Ordnance Survey material with the permission of Ordnance Survey on behalf of the Controller of HMSO. © Crown Copyright.
Unauthorised reproduction infringes Crown Copyright and may lead to prosecution or civil proceedings.Wokingham District Council Licence LA086134

Development Control Section, Environmental Services, Wokingham District Council.

15 June 2000

Scale: 1 : 2500

FIGURE 5.

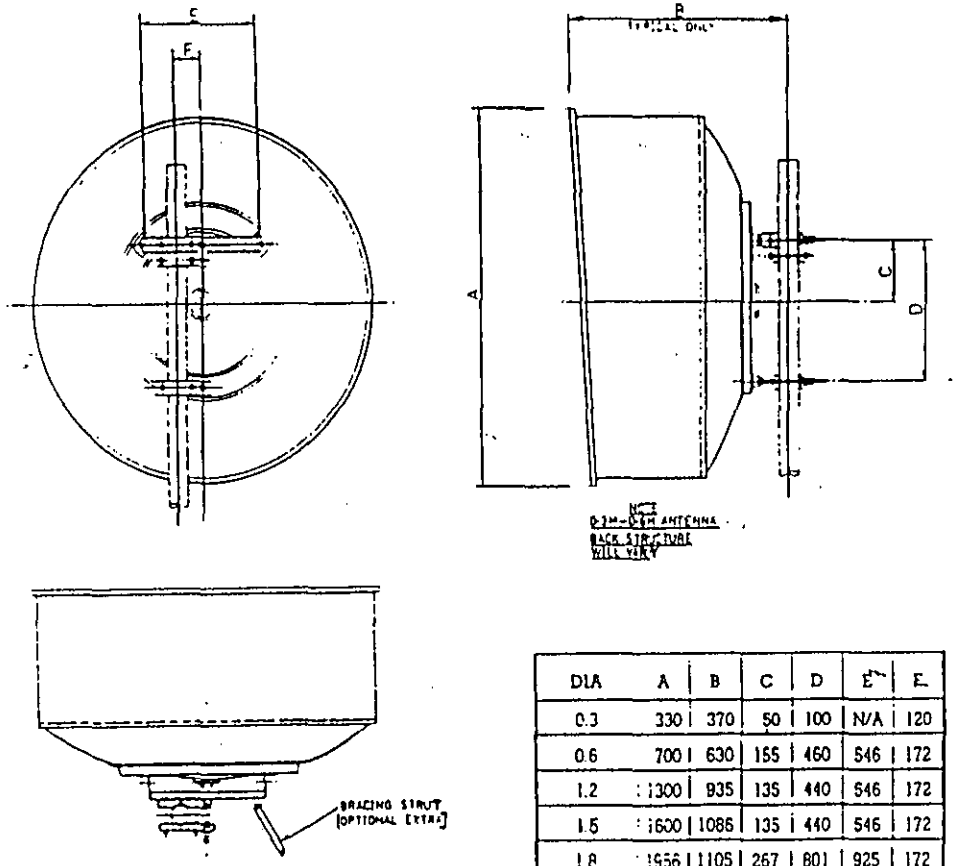

DIA	A	B	C	D	E*	F
0.3	330	370	50	100	N/A	120
0.6	700	630	155	460	546	172
1.2	1300	935	135	440	546	172
1.5	1600	1086	135	440	546	172
1.8	1956	1105	267	801	925	172

APPROVED

COMMERCIAL IN CONFIDENCE

DO NOT SCALE

RELEVANT BS STANDARDS | BS 308 | BS 3429

REV	DESCRIPTION	BY	DATE	CHKD

TITLE

MICROWAVE ANTENNA
MECHANICAL SPECIFICATIONS

SCALE	DRAWN	CHECKED	APPROVED
NTS	RDP		
	DATE 03/10/91	DATE 22.10.91	DATE 22.10.91

MICROTEL ®
ST JAMES COURT
GREAT PARK ROAD
ALMONDSBURY
BRISTOL BS12 4QJ
TEL. 0454 618500
FAX 0454 618501

DRAWING NUMBER

10/1170/1X