This drawing is copyright and may not be reproduced without the written consent of the Architect.

09 JUN 2000* 1725

DELEGATED

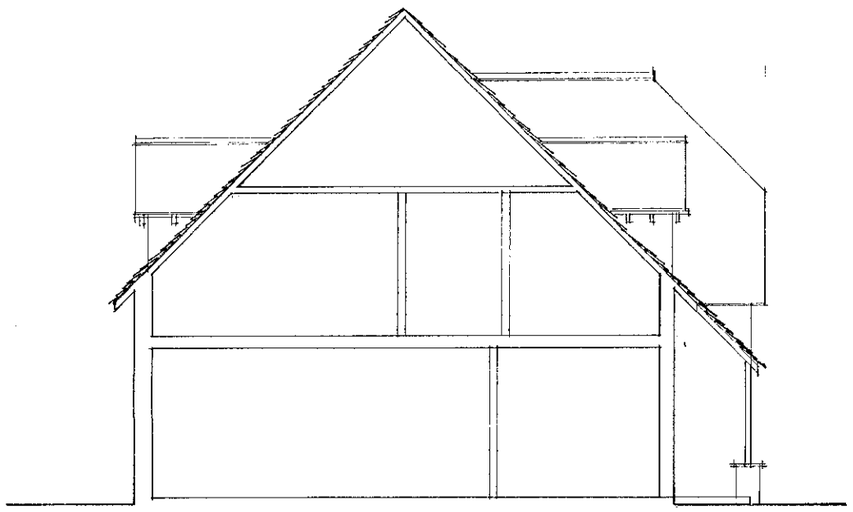

SECTION

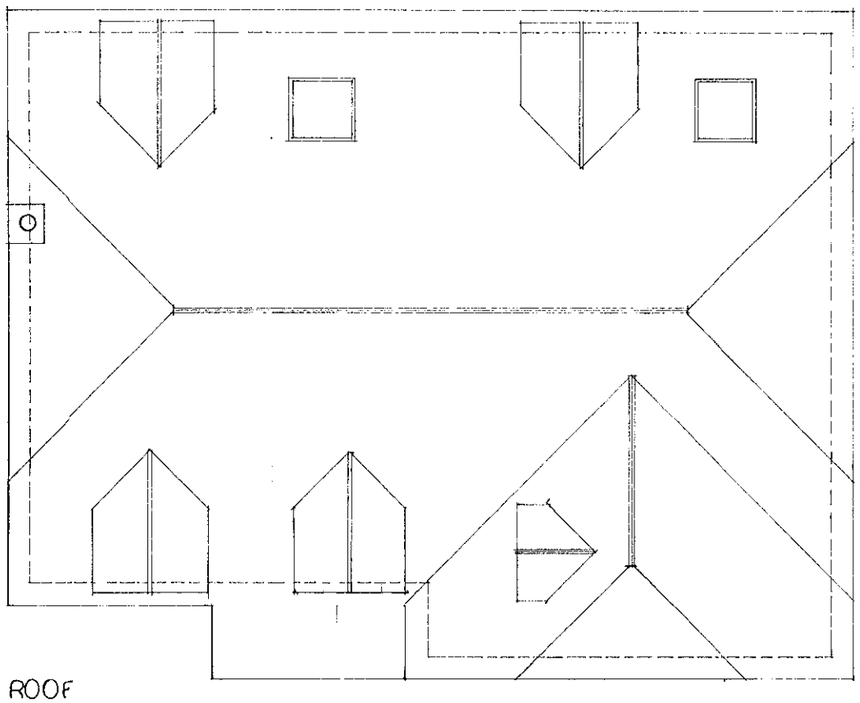

ROOF

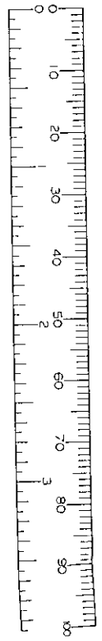

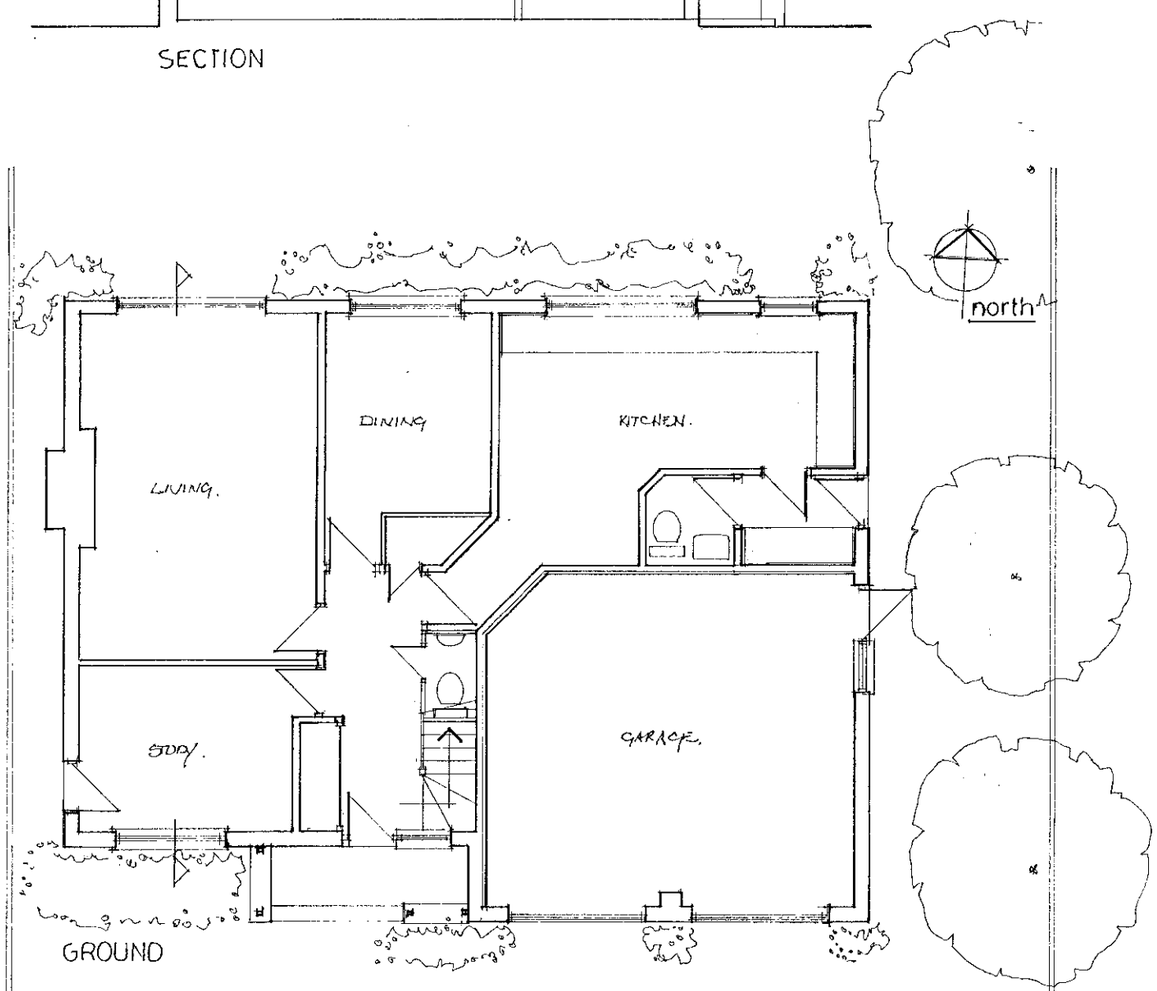

GROUND

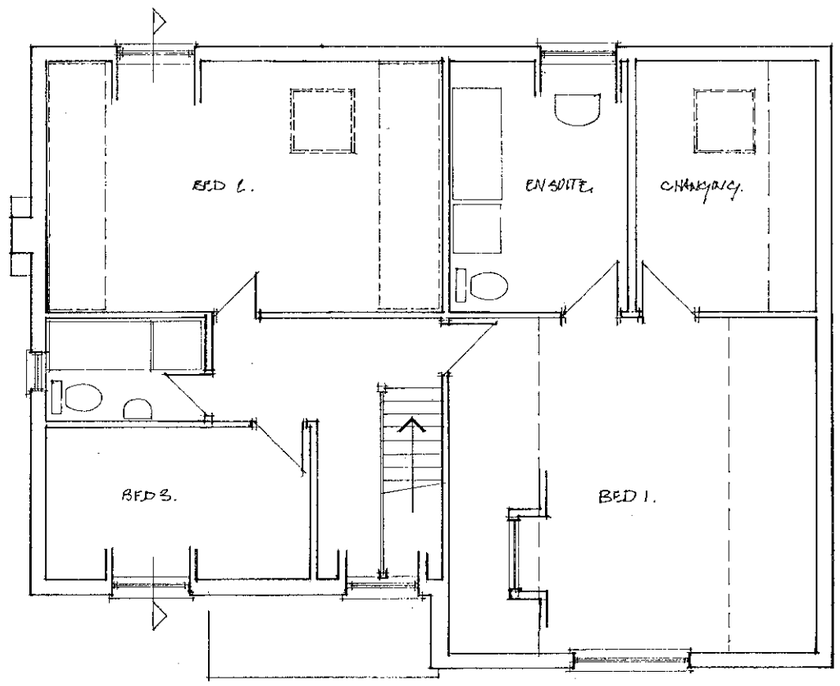

FIRST

W. M. GRAHAM ASSOCIATES
CHARTERED ARCHITECTS
1 Rectory Road.
Wokingham.
Berkshire. RG40 1DJ.
Tel: 0118 9770464
Fax. 0118 9770482

Job
PLOT ADJOINING
30-32 NASHGROVE LANE
WOKINGHAM

Title
PLANS & SECTION

Scale 1:100	Date JUNE 2000	Drawn By
Job No. 2295	Drawing No. 01	Revision

This drawing is copyright and may not be reproduced without the written consent of the Architect.

08 JUN 2016 1725

DELEGATED



FRONT

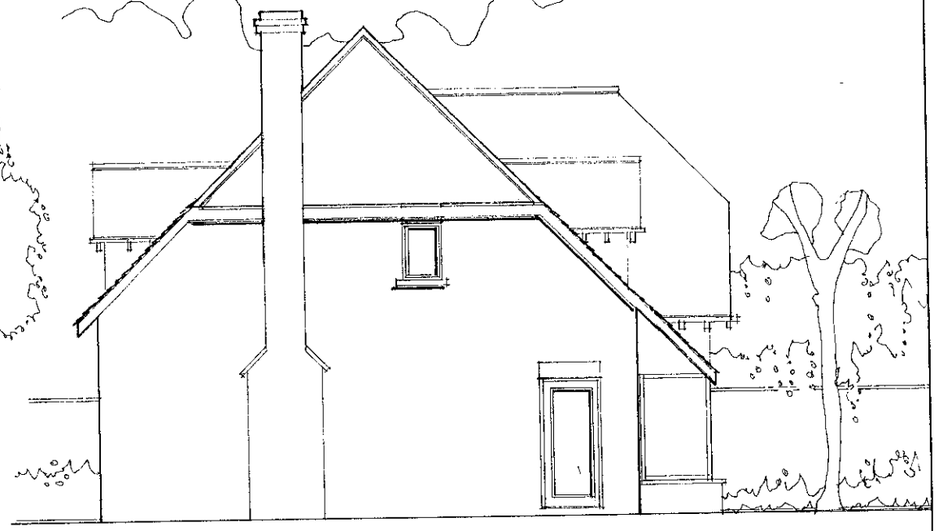

SIDE



REAR

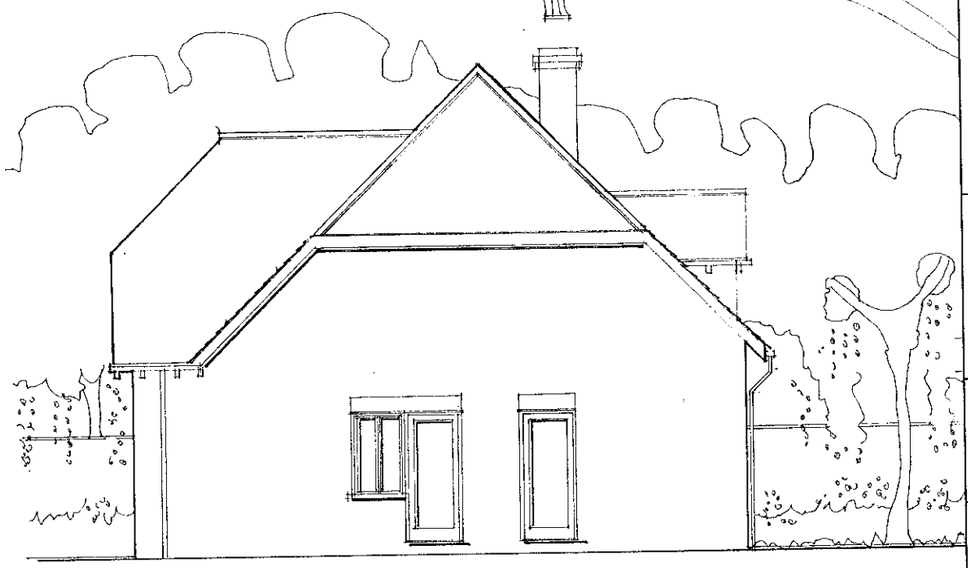

SIDE

W. M. GRAHAM ASSOCIATES
CHARTERED ARCHITECTS
1 Rectory Road,
Wokingham,
Berkshire, RG40 1DJ.
Tel: 0118 9770464
Fax: 0118 9770482

Job
PLOT ADJOINING
30-32 NASHGROVE LANE
WOKINGHAM

Title
ELEVATIONS

Scale 1:100	Date JUNE 2000	Drawn By
Job No. 2295	Drawing No. 02	Revision

09.JUN.2000* 1725



road elevation (MCCARTEY WAY).

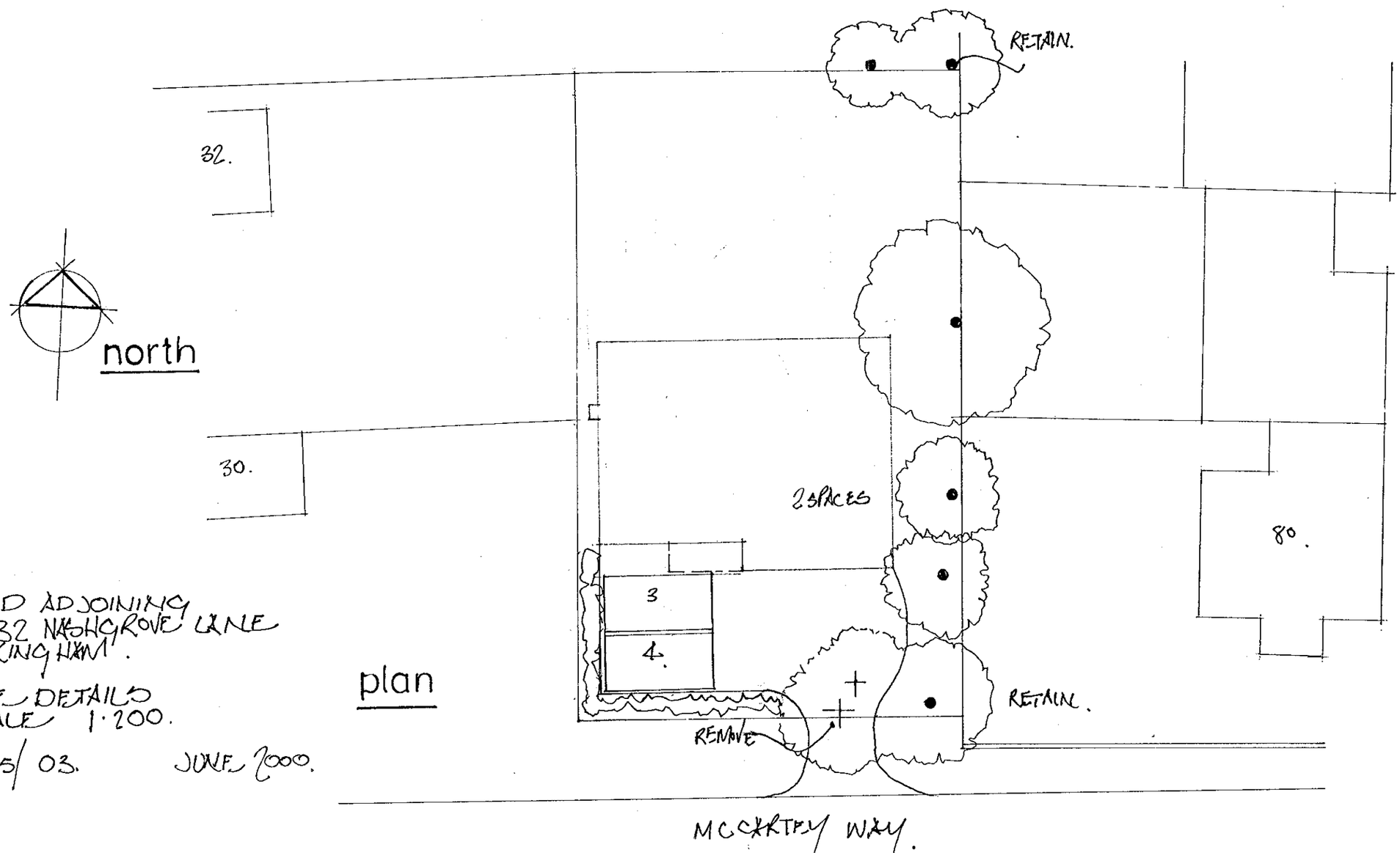

north

plan

DELEGATED

3 BEDS
4 CAR SPACES.
2 IN GARAGE
2 ON DRIVE 2.4×4.5.

LAND ADJOINING
30-32 NASHGROVE LANE
WOKINGHAM.

SITE DETAILS
SCALE 1:200.

1795/03. JUNE 2000.

W.M. GRAHAM ASSOCIATES
CHARTERED ARCHITECTS

1 Rectory Road,
Wokingham,
Berkshire, RG11 1DJ
Tel: (0734) 770464
Fax: (0734) 770482

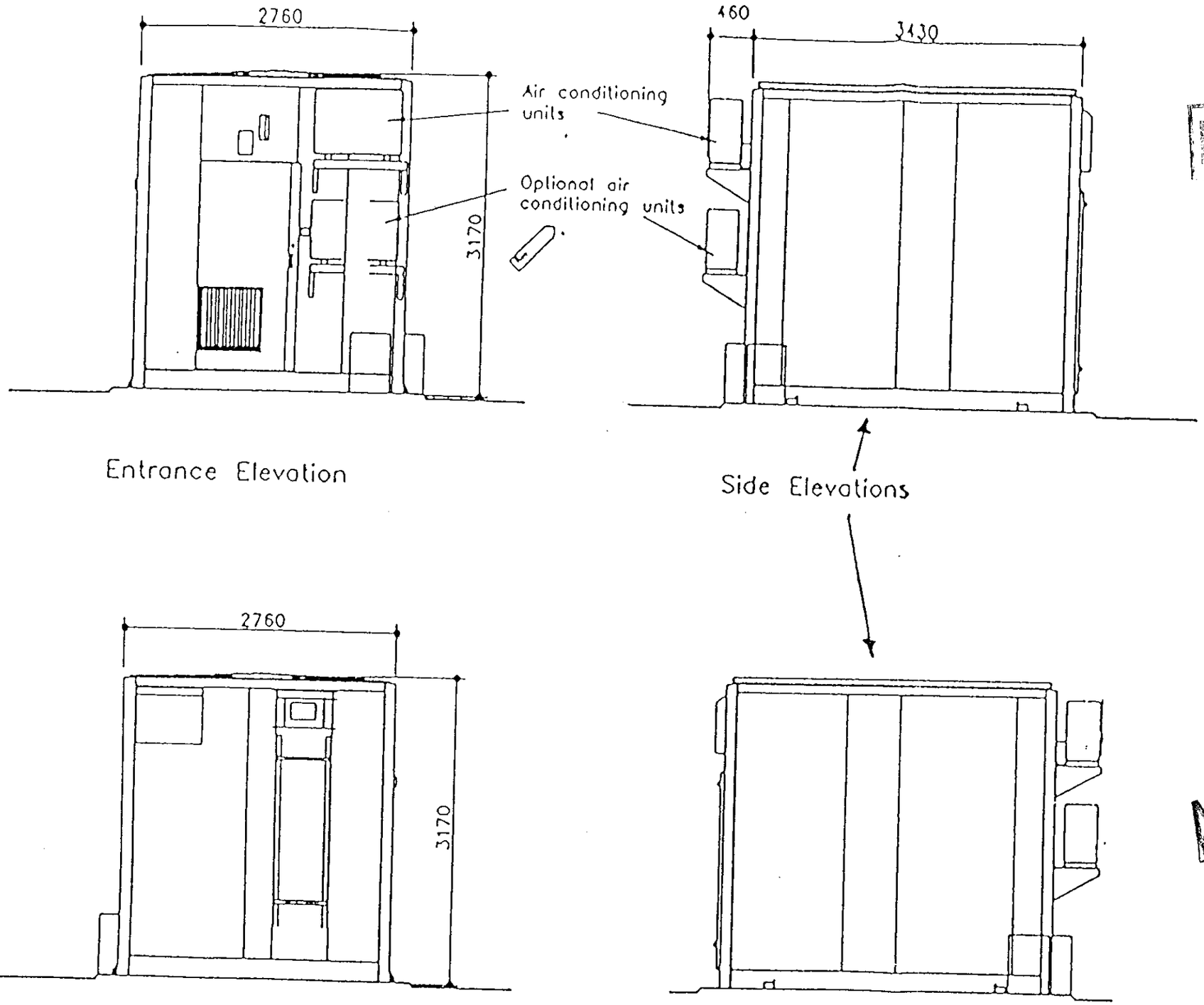

12.JUN.2006* 1720

DELEGATED

APPROVED

GENERAL NOTES

This drawing is the Copyright of Cellnet and must not be released, loaned or copied without written consent.
Use written dimensions only. Do not scale.
Use the current revision of all referenced information.
Refer to Standard Drawing Notes.

CABIN SETTING OUT
For cabin setting out refer to drawing no. EQU/400.

CABIN SUPPORT
For cabin foundation refer to drawing no FOU/800.
For cabin support grillage refer to drawing no. STR/402.

CABIN FINISH
The cabin finish to be dependant on site specific location.

CABIN MOUNTED ANTENNA POLES
Where antenna poles are mounted on the corners of cabin refer to drawing no. STR/809 for bracket details. Base of poles to be supported on cabin support grillage. Refer to cabin manufacturers details for fixing insert details.

Rev	Date	Description	Drw	Ckd
[illegible]	1-8-96	[illegible]	[illegible]	[illegible]
[illegible]	11.1.96	[illegible]	[illegible]	

cellnet
NETWORK CONSTRUCTION

STANDARD DETAILS

Drawing Title:
30m sq Cabin Elevations

Scale: 1:50	Drawn: js
Date: 1-8-96	Checked: –

Drawing Number:
P/EQU/200/oB

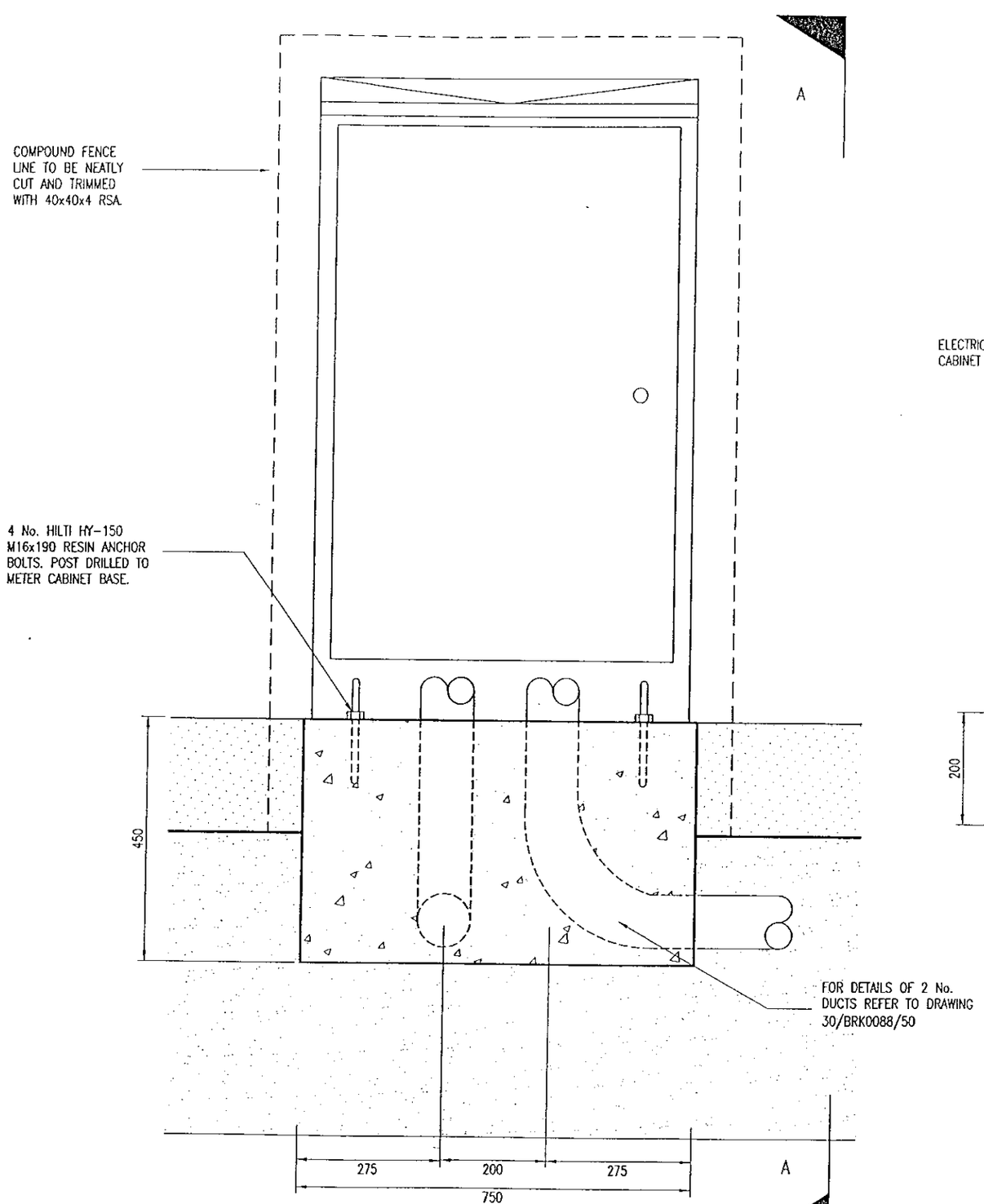

FRONT ELEVATION
SCALE 1:10

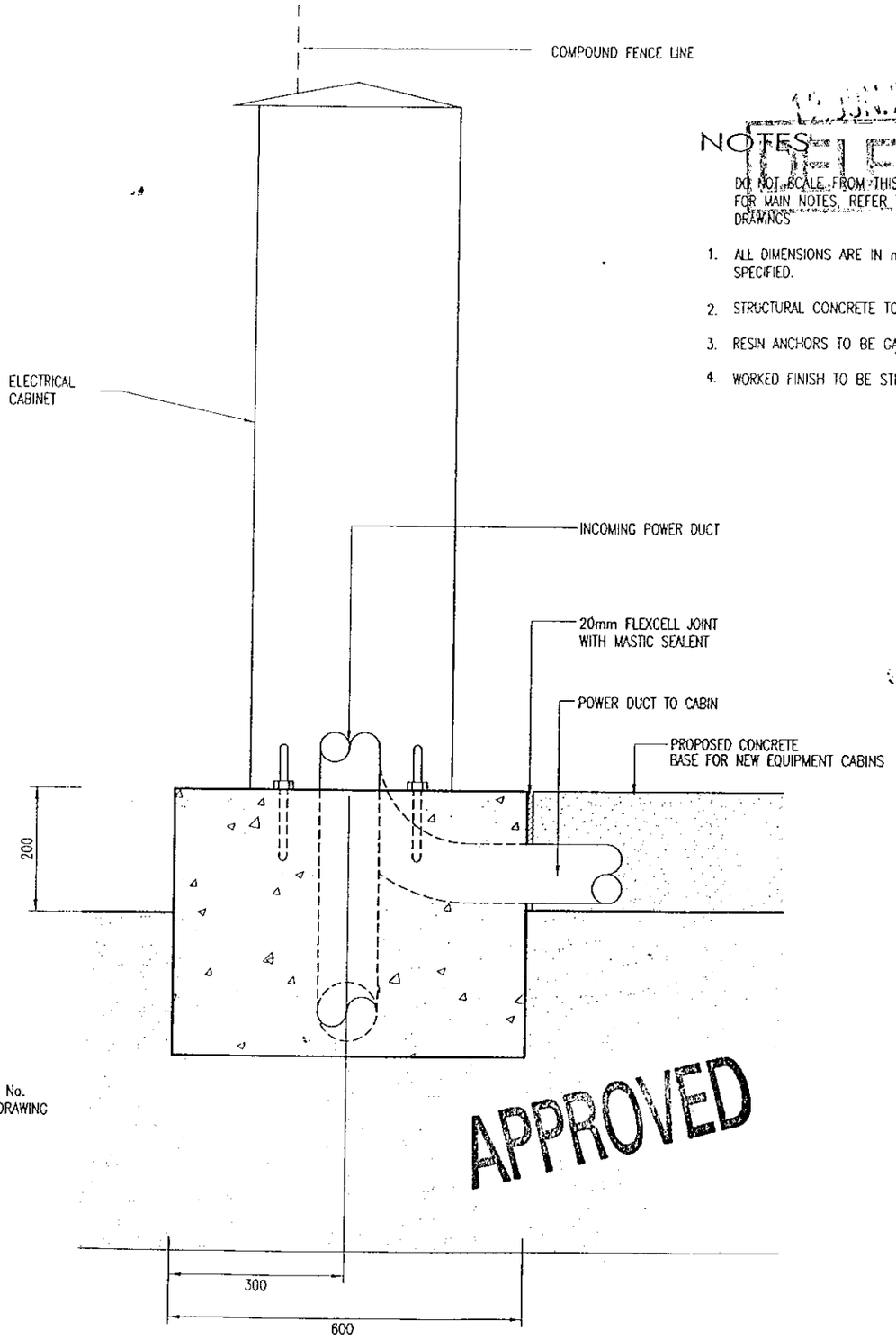

ELEVATION A-A
SCALE 1:10

NOTES

DO NOT SCALE FROM THIS DRAWING
FOR MAIN NOTES, REFER TO SPECIFIC PROJECT DRAWINGS

1. ALL DIMENSIONS ARE IN mm UNLESS OTHERWISE SPECIFIED.
2. STRUCTURAL CONCRETE TO BE GRADE FND3.
3. RESIN ANCHORS TO BE GALVANISED.
4. WORKED FINISH TO BE STEEL FLOAT FINISH.

12 JUN 2000 1726
DELEGATED

APPROVED

SITE NUMBER BRK 0088

PC/BRK0088/SHA/99051834	CELLNET REF 6777
PC/BRK0088/SHA/99052911	MPC REF 91520

ample
Harrier House St Albans Road East
Hatfield Herts AL10 0HE
tel +44(0)1707 266144 fax +44(0)1707 266677
e-mail:- adl@ample.co.uk

A3 ORIGINAL
INCHES
MILLIMETRES

ISS.	DESCRIPTION	APP	IN.	DATE.

SCALE RTD | DRAWN LC | DATE 05.10.99 | CHKED | DATE 10/05/00 | APP | DATE 10.5.00

TITLE MPC METER CABIN
WOODLEY GREEN
HEADLEY PARK INDUSTRIAL ESTATE
WOODLEY, READING

DRAWING NUMBER 30/BRK0088/SHA/06
AMPLE NUMBER 99/OPCS/BRK0088/06
ISSUE –

orange
St James Court
Great Park Road
Almondsbury Park
Bradley Stoke
Bristol
BS12 4QJ

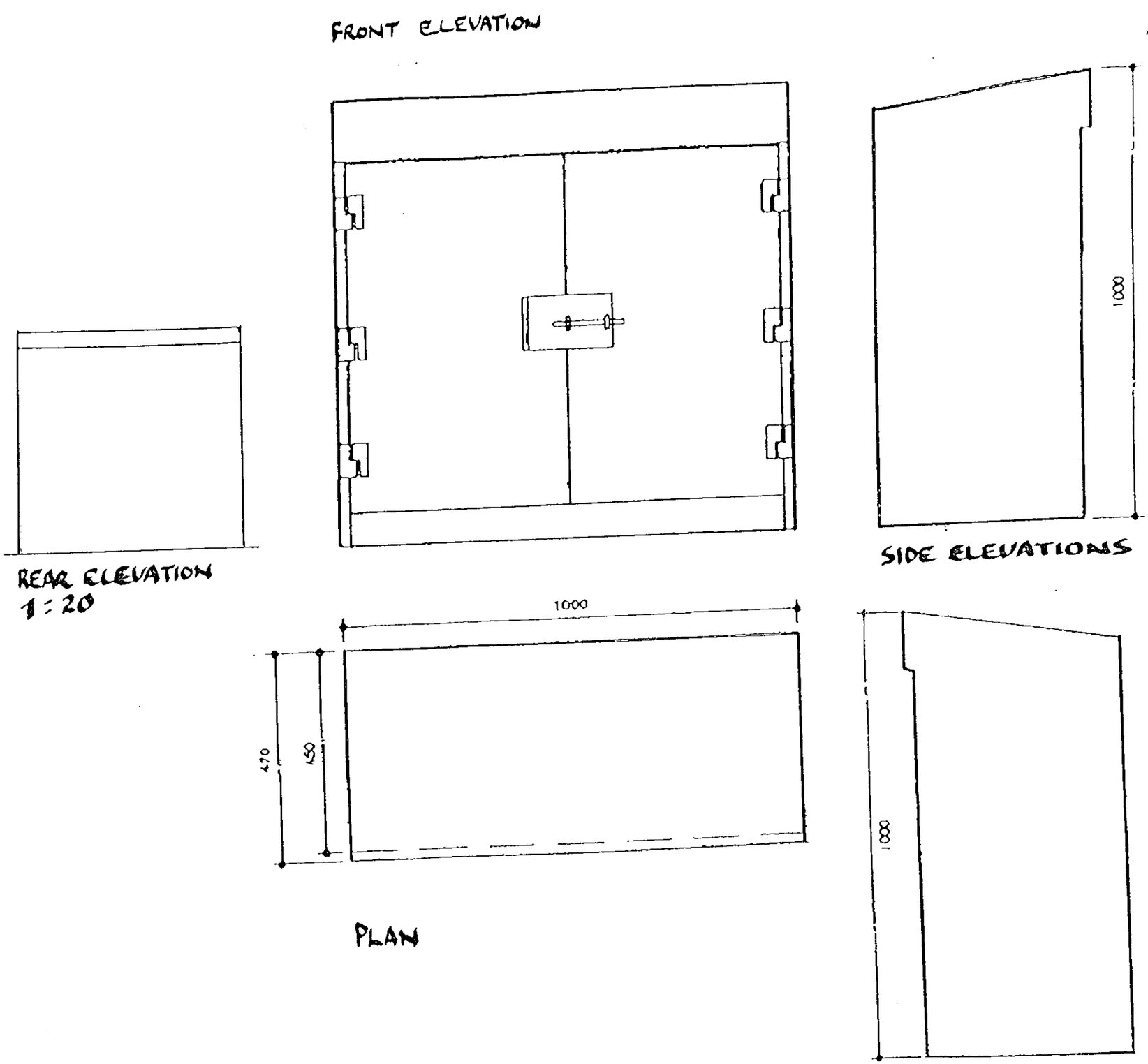

DELEGATED

APPROVED

GENERAL NOTES

This drawing is the Copyright of Celinet and must not be reviewed, loaned or copied without written consent.
Use written dimensions only. Do not scale.
Use the current revision of all referenced information.
Refer to Standard Drawing Notes

PALISADE FENCED SITES
Where compound fenced with palisade meter cabinet to be sited within compound. Omit fence goal post fixed to concrete base.

FOR CABINET FOUNDATIONS + DUCTING SEE P/FOU/101
FOR BACKBOARD DETAILS
3 PHASE 63 AMP SEE P/ELE/006
SINGLE PHASE 100 AMP SEE P/ELE/005
SINGLE PHASE 32 AMP SEE P/ELE/007

Meter Cabin Colour-Light Grey
Padlock Kaba 2001 (small)

CABINET COLOUR-
BS381C-627 LIGHT AIRCRAFT GREY

Rev	Date	Description	Drw	Chd
C	11.04.97	Colour spec added/dig by Chargo	SMG	RT
[illegible]	23.11.96	Light [illegible]	SMG	RT
[illegible]	27.3.96	Corrections Removed	SMG	RT

celinet
NETWORK CONSTRUCTION

STANDARD DETAILS

Drawing Title:
Malcoe Electrical Meter Cabinet

Scale: 1:10	Drawn: SMG
Date: 14.01.97	Approved: M.E

Drawing Number
P/EQU/600/G

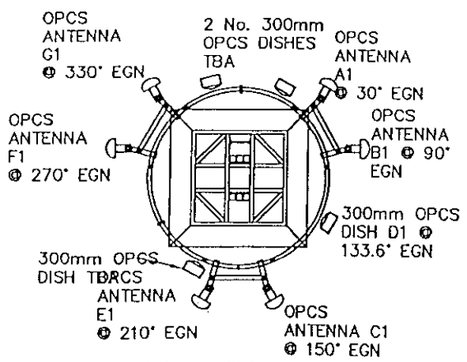

PLAN ON OPCS ANTENNAS @ 23.4m
SCALE 1:100

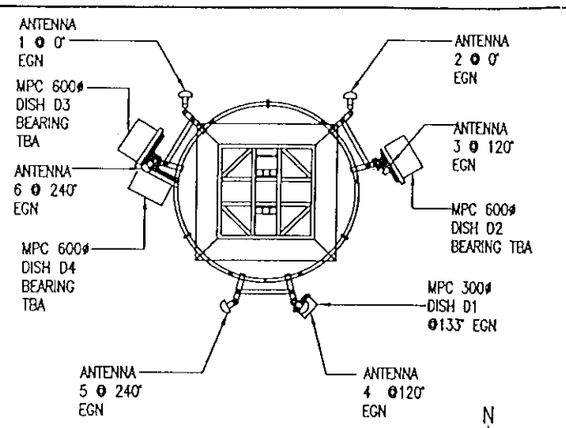

PLAN ON MPC ANTENNAS @ 20.3m
SCALE 1:100

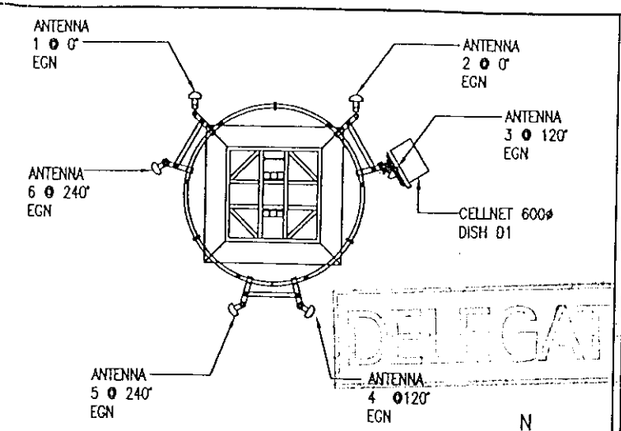

PLAN ON CELLNET ANTENNAS @ 15.2m
SCALE 1:100

DELEGATED

MPC EQUIPMENT SCHEDULE

PROPOSED CABIN DETAILS	
CABIN TYPE	CABIN DIMENSION (WIDTH x DEPTH x HEIGHT)
MPC LARGE CABIN	3684x2684x2975mm

PROPOSED ANTENNA DETAILS		
ANT 1	0° EGN	20.3m AGL
ANT 2	0° EGN	20.3m AGL
ANT 3	120° EGN	20.3m AGL
ANT 4	120° EGN	20.3m AGL
ANT 5	240° EGN	20.3m AGL
ANT 6	240° EGN	20.3m AGL

PROPOSED DISH DETAILS			
DISH No.	DISH SIZE	DISH HEIGHT (m AGL)	BEARING
D1	300mm	20.3m	133° EGN
D2	600mm	TBA	TBA
D3	600mm	TBA	TBA
D4	600mm	TBA	TBA

CELLNET EQUIPMENT SCHEDULE

PROPOSED CABIN DETAILS	
CABIN TYPE	CABIN DIMENSION (WIDTH x DEPTH x HEIGHT)
MALCOE	3725x2525x2900mm

ANTENNA DETAILS	6x DUAL POLAR ANTENNAS	
CELL No.	BEARING	HEIGHT
CELL 1	0.0° EGN	15.2m AGL
CELL 2	0.0° EGN	15.2m AGL
CELL 3	120° EGN	15.2m AGL
CELL 4	120° EGN	15.2m AGL
CELL 5	240° EGN	15.2m AGL
CELL 6	240° EGN	15.2m AGL

PROPOSED DISH DETAILS			
DISH No.	DISH SIZE	DISH HEIGHT (m AGL)	BEARING
D1	600mm	14.8m	TBA

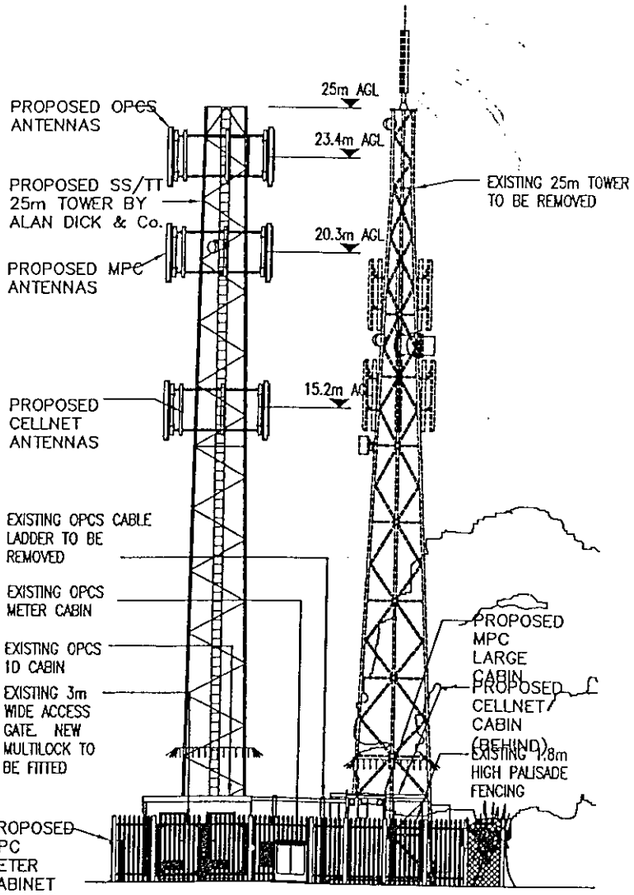

NORTH ELEVATION
SCALE 1:200

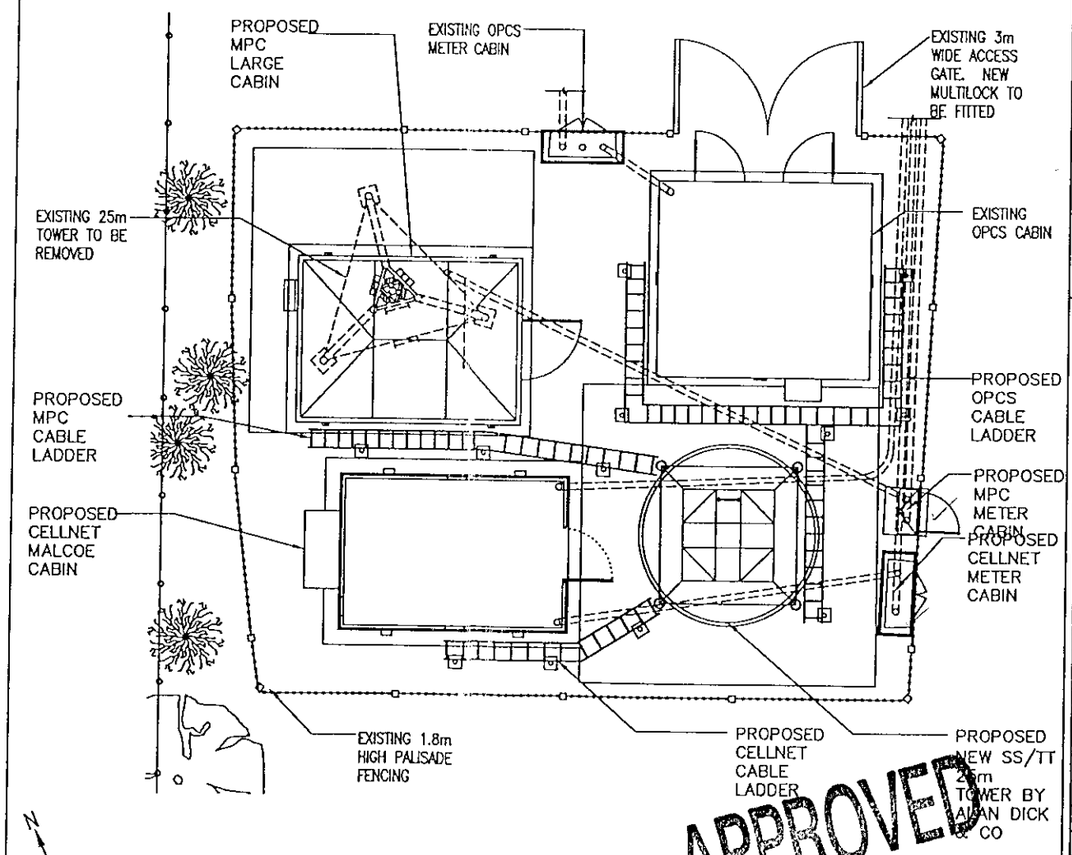

COMPOUND PLAN
SCALE 1:100

APPROVED

OPCS EQUIPMENT SCHEDULE

PLANS ARE AVAILABLE AT THE OFFICES OF ORANGE PCS LTD.

ANTENNA KEY

ITEM	FUNCTION LINK No.	SECTOR	TYPE / SIZE	BEARING	HEIGHT TO C/L OF ANTENNA FROM FFL	HEIGHT TO CENTRE OF DISH FROM FFL
A1	TXRX	A	CSA0400A	30°	23400mm	
B1	TXRX	B	CSA0400A	90°	23400mm	
C1	TXRX	C	CSA0400A	150°	23400mm	
E1	TXRX	E	CSA0400A	210°	23400mm	
F1	TXRX	F	CSA0400A	270°	23400mm	
G1	TXRX	G	CSA0400A	330°	23400mm	
D1			300mmø	213° EGN		23400mm
D2			300mmø	TBA		23400mm
D3			300mmø	TBA		23400mm
D4			300mmø	TBA		23400mm

EXISTING CABIN DETAILS	
CABIN TYPE	CABIN DIMENSIONS (WIDTH x DEPTH x HEIGHT)
1No. 1D CABIN	3166x3436x2733mm (TO REMAIN)

PROPOSED CABIN DETAILS	
CABIN TYPE	CABIN DIMENSIONS (WIDTH x DEPTH x HEIGHT)

PC/BRK0088/SHA/99051834
PC/BRK0088/SHA/99052911

CELLNET REF 6777
MPC REF 91520

SITE NUMBER BRK 0088

ample
ample
Harrier House St Albans Road East
Hatfield Herts AL10 0HE
tel +44(0)1707 266144 fax +44(0)1707 266677
e-mail:-adl@ample.co.uk

A3 ORIGINAL
INCHES
MILLIMETRES

ISS.	DESCRIPTION	APP	IN.	DATE.
E	MPC CABIN CHANGED		RN	11.05.00
D	CELLNET ANTENNAS RELOCATED		RN	10.05.00
C	TOWER TYPE CHANGED, COMPOUND REVISED		RN	09.05.00
B	TOWER HEIGHT REVISED		LC	12.10.99
A	DETAIL DESIGN		LC	11.10.99
-	CELLNET AND MPC SITE SHARE			

SCALE RTD
DRAWN LC CHKED APP
DATE 05.10.99 DATE DATE

TITLE GENERAL ARRANGEMENT
WOODLEY GREEN
HEADLEY PARK INDUSTRIAL ESTATE
WOODLEY, READING

DRAWING NUMBER 30/BRK0088/SHA/02
AMPLE NUMBER 99/OPCS/BRK0088/02
ISSUE E

orange

St James Court
Great Park Road
Almondsbury Park
Bradley Stoke
Bristol
BS12 4QJ

Drg No. MPC/IDS/14002308

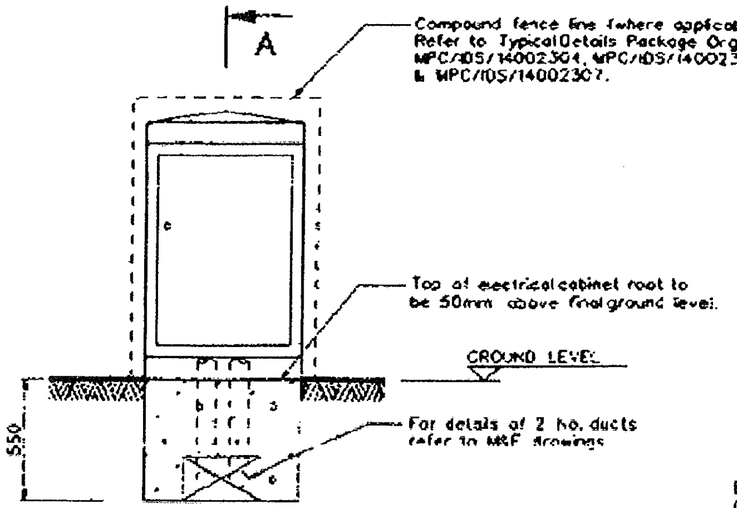

FRONT ELEVATION

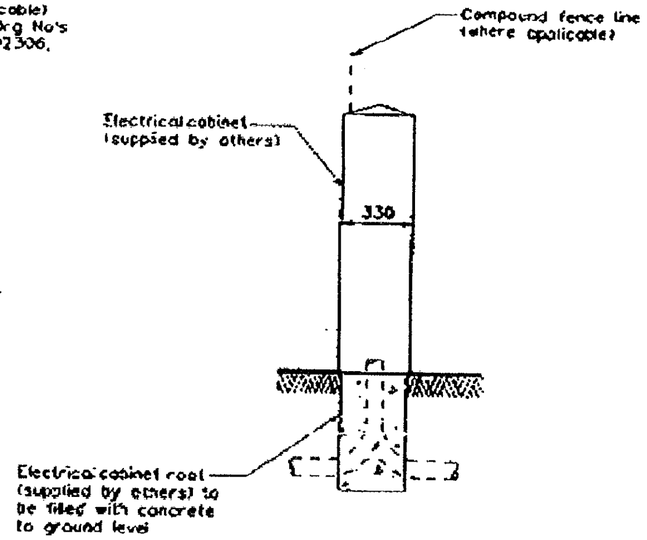

SIDE ELEVATION

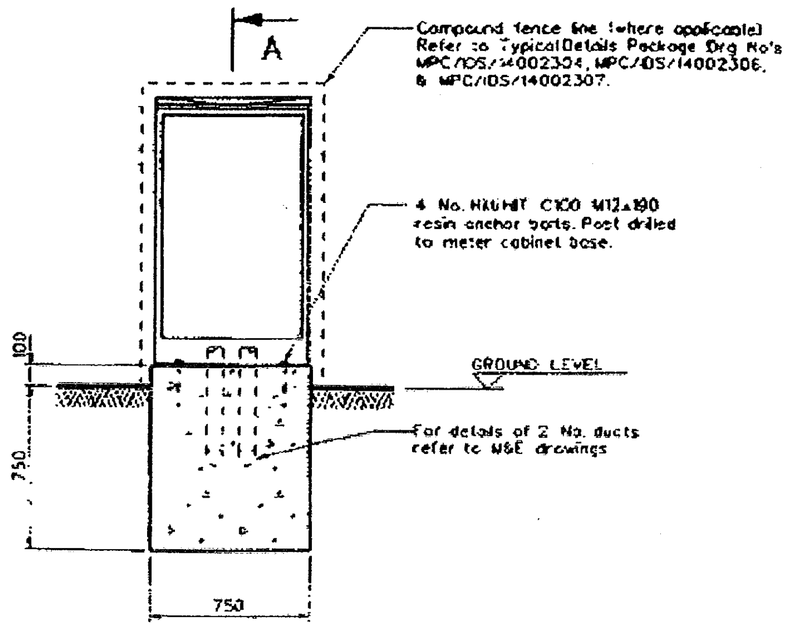

REAR ELEVATION

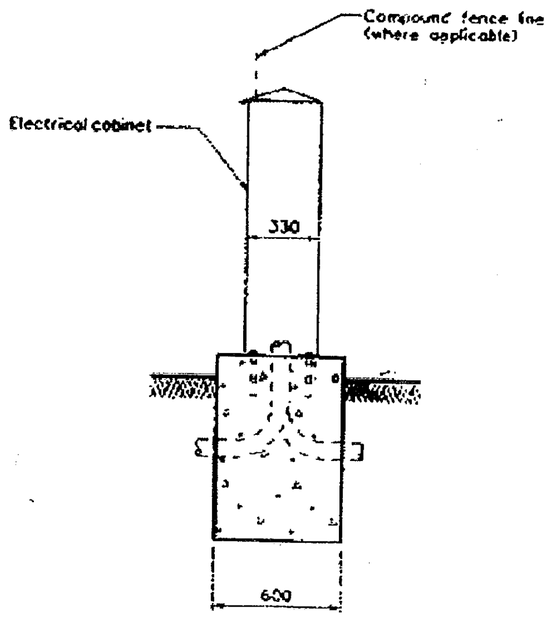

SIDE ELEVATION

NOTES

DO NOT SCALE

For main notes, refer to specific project drawings.

1. All dimensions are in mm unless otherwise specified.
2. Structural concrete to be grade FND3
3. Nominal cover to reinforcement to be 10mm
4. Resin anchors to be galvanised.
5. Worked finish to be steel float finish.
6. This drawing shows a Climet meter cabinet root for Portesio meter cabinet with root. See installation instructions supplied with cabinet.

ORIGINAL DRAWING A2 SIZE

12.JUN.2000 1726

D	Date 26-5-99	Details amended.
Mn 22870	Approv. [signature]	
C	Date 28/5/98	Details amended.
Mn 19099	Approv. LPG	
B	Date 22/08/96	Fence line added for compound sites. Building line deleted. Drg No. MPC/IDS/14002301 incorporated.
Mn 12117	Approv. AH	
A	Date 16/02/96	First issue.
Mn 11897	Approv. GG	

Mercury Personal Communications

A Cable & Wireless / US WEST joint venture

Mercury Personal Communications is a partnership between Mercury Personal Communications Limited, USM PCN Inc and MPC 10 Limited

Imperial Place, Imperial Road, Borehamwood, Herts. WD6 1EA.

Site name & Address:

TECHNICAL SERVICES

23 JUN 1999

Title:

ELECTRICAL METER CABINETS : FOOTING CONSTRUCTION DETAILS

Purpose of issue:

APPROVED

Drawing No:

MPC/IDS/14002308

Ceiling | Site no:

Issue	Scale:	Chk'd:	Date:
D	1:20	[signature]	27/5/99
	Drn: GJM	Date: 06/02/96	Approv. [signature] Date: 26.5.99

© Mercury Personal Communications 1996 This drawing and any information or descriptive matter set out hereon are the confidential and copyright property of Mercury Personal Communications and must be kept in the strictest confidence by the recipient. Strictest confidence by the recipient and must not be loaned or disclosed to any third party or copied or used for manufacturing tendering or any other purpose without Mercury Personal Communications prior written consent.

When quoting the drawing number please state the latest letter of issue.

Site A2 594 mm x 430 mm

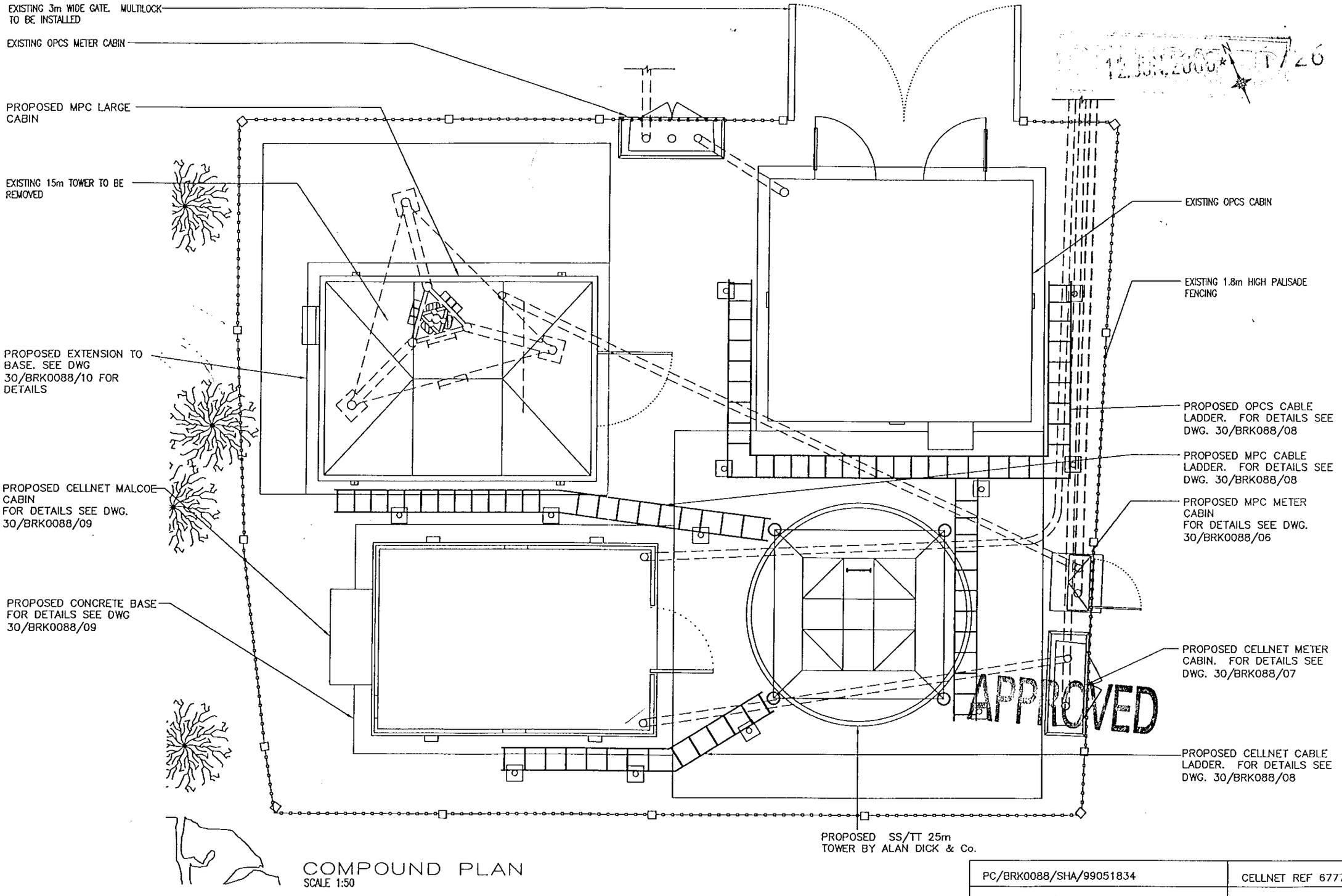

COMPOUND PLAN
SCALE 1:50

SITE NUMBER BRK 0088

PC/BRK0088/SHA/99051834	CELLNET REF 6777
PC/BRK0088/SHA/99052911	MPC REF 91520

ample
ample
Harrier House St Albans Road East
Hatfield Herts AL10 0HE
tel +44(0)1707 266144 fax +44(0)1707 266677
e-mail:-adl@ample.co.uk

A3 ORIGINAL
INCHES
MILLIMETRES

ISS.	DESCRIPTION	APP.	IN.	DATE.
C	MPC CABIN CHANGED		RN	11.05.00
B	TOWER TYPE CHANGED COMPOUND REVISED		RN	09.05.00
A	TOWER HEIGHT REVISED		LC	12.10.99
--	CELLNET AND MPC SITE SHARE DETAIL DESIGN			

SCALE	RTD	DRAWN	LC	CHKED	APP	
		DATE	05.10.99	DATE	DATE	

TITLE COMPOUND PLAN
WOODLEY GREEN
HEADLEY PARK INDUSTRIAL ESTATE
WOODLEY, READING

DRAWING NUMBER 30/BRK0088/SHA/04 ISSUE C
AMPLE NUMBER 99/OPCS/BRK0088/04

orange

St James Court
Great Park Road
Almondsbury Park
Bradley Stoke
Bristol
BS12 4QJ

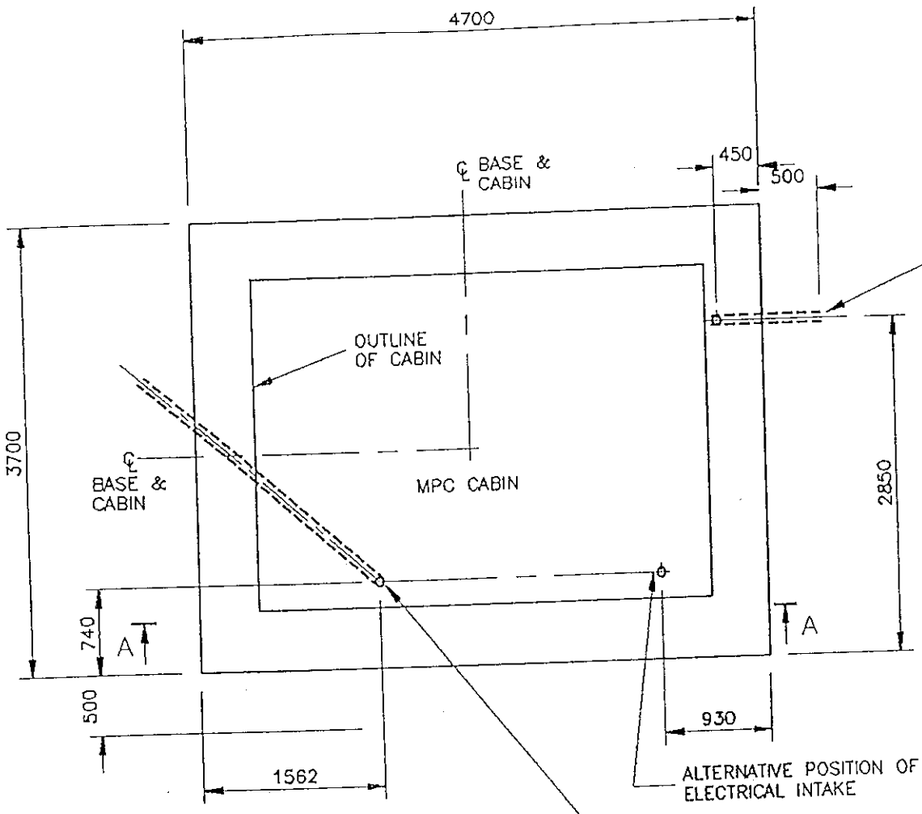

PLAN VIEW
SCALE 1:50

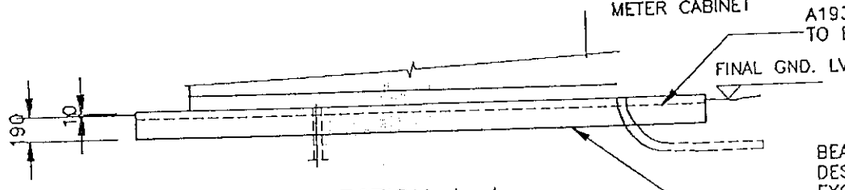

SECTION A–A
SCALE 1:50

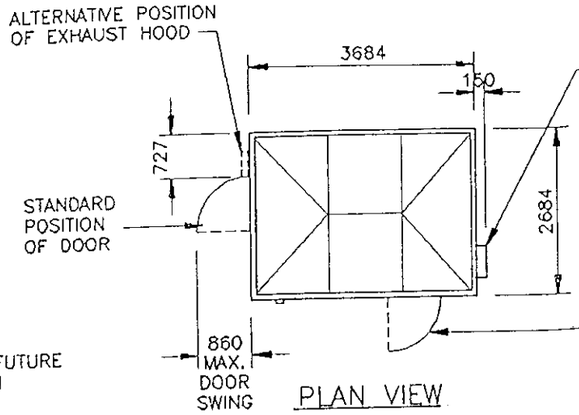

PLAN VIEW

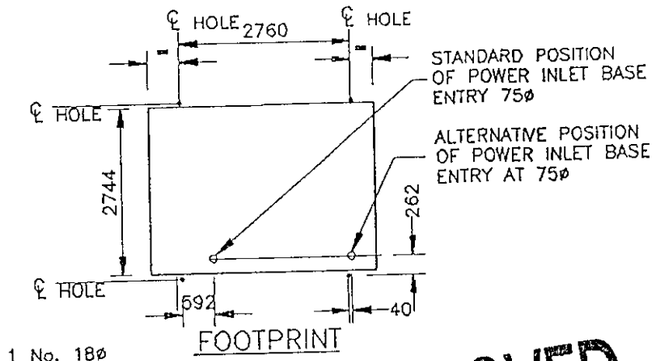

FOOTPRINT

1 No. 18ø HOLDING DOWN HOLE IN EACH LIFTING LUG

POWER INLET BASE ENTRY 75ø

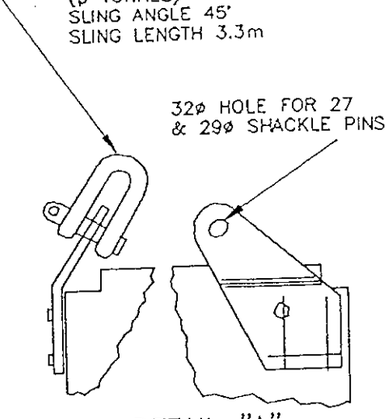

DETAIL "A"
(NOTE: LIFTING LUG REMOVABLE IF NECESSARY)

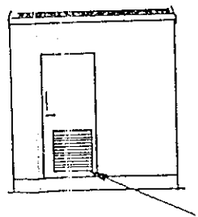

LEFT END VIEW

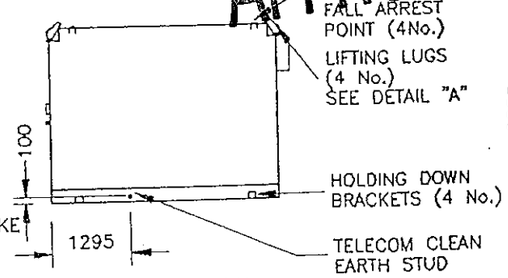

SIDE VIEW

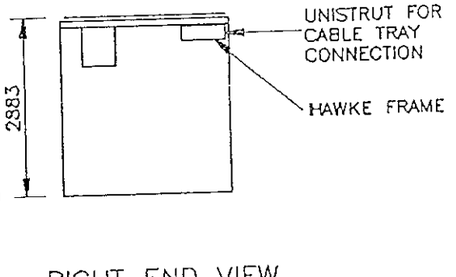

RIGHT END VIEW

MPC CABIN DETAILS

12.JUN.2000* 1/26

DELEGATED

APPROVED

COMMERCIAL IN CONFIDENCE

DO NOT SCALE

RELEVANT BS STANDARDS | BS 308 | BS 3429

Blyth & Blyth Associates (London)
16-18 HOWARD BUSINESS PARK
HOWARD CLOSE, WALTHAM ABBEY
ESSEX, EN9 1XE
TEL: WALTHAM ABBEY (01992) 763333

REV	DESCRIPTION	BY	DATE	CHKD
A	ELECTRIC DUCT TO CABIN REVISED	KSC	09.09.97	CB
	FOR APPROVAL	DRG	12.08.97	CB

TITLE
STRUCTURAL PLAN & ELEVATIONS
(SITESHARE)

ARTEMIS No

SCALE	DRAWN	CHECKED	APPROVED
AS SHOWN	DRG	CB	AFL
	DATE 12.08.97	DATE 12.08.97	DATE 12.08.97

ORANGE™

SI JAMES COURT
GREAT PARK ROAD
ALMONDSBURY
BRISTOL BS12 4QJ
TEL. 01454 618500
FAX 01454 618501

DRAWING NUMBER / STD /A3/L

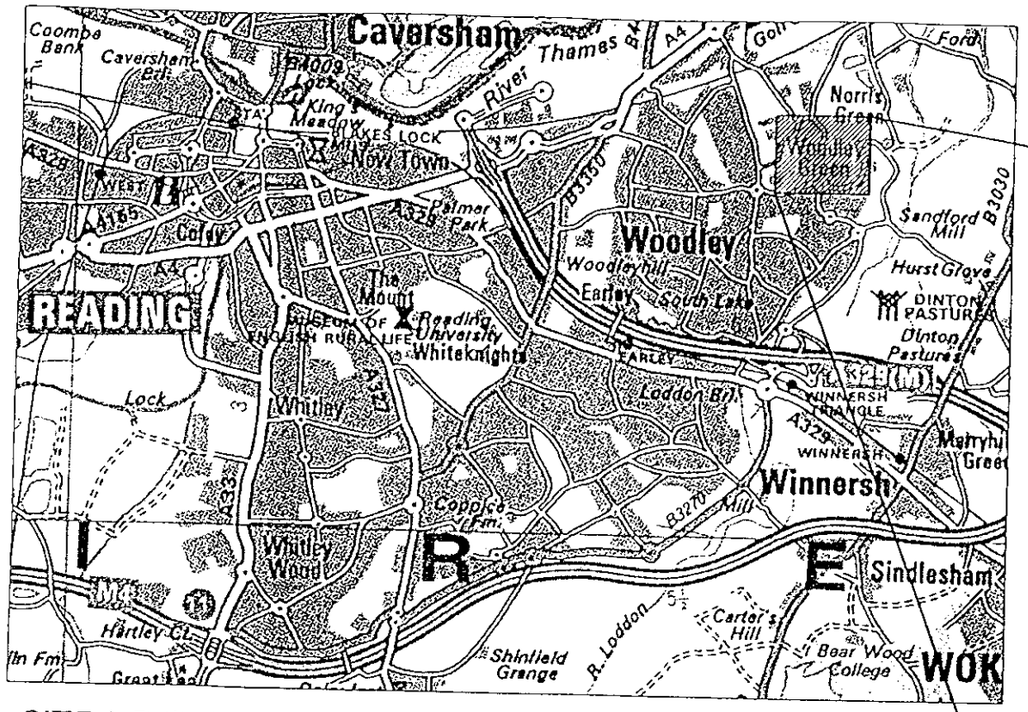

SITE LOCATION
NOT TO SCALE

N

0 10 20 30 40 50 60 70 80 90 100

APPROVED

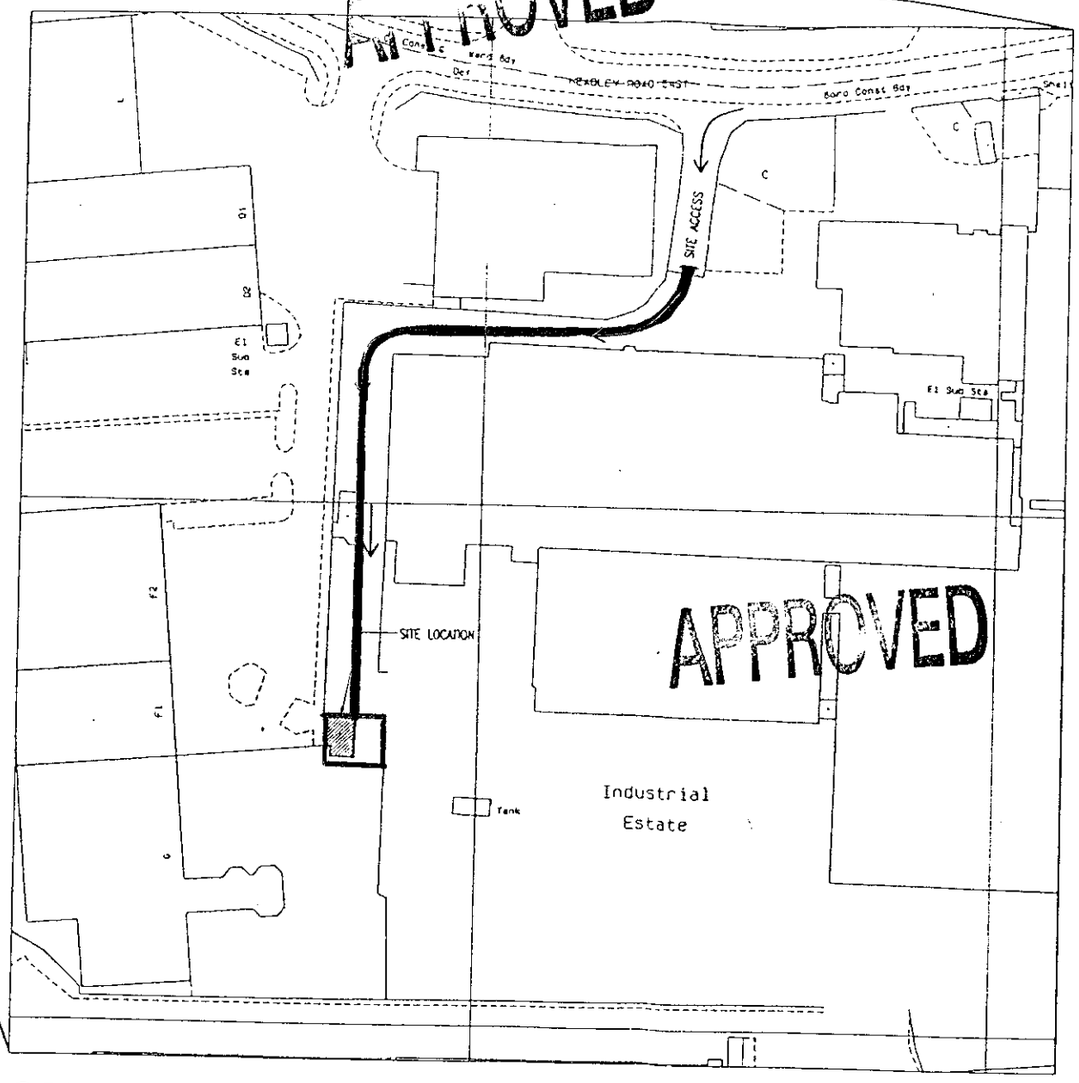

ORDNANCE SURVEY
SCALE 1:1250

SITE NUMBER BRK 0088

National Grid Reference E 476770 N 173150

PC/BRK0088/SHA/99051834 | CELLNET REF 6777
PC/BRK0088/SHA/99052911 | MPC REF 91520

ample design limited
Harrier House St Albans Road East
Hatfield Herts AL10 0HE
tel +44(0)1707 266144 fax +44(0)1707 266677
e-mail:- adl@ample.co.uk

ample

A3 ORIGINAL
INCHES
0 1 2 3
0 10 20 30 40 50
MILLIMETERS

ISS.	DESCRIPTION	APP	IN.	DATE.
A	DETAIL DESIGN	LC		11.10.99
-	CELLNET AND MPC SITE SHARE			

SCALE	DRAWN	CHKED	APP
RTD	LC		
DATE	05.10.99	DATE 11/10/99	DATE 11/10/99

TITLE SITE LOCATION
WOODLEY GREEN
HEADLEY PARK INDUSTRIAL ESTATE
WOODLEY, READING

DRAWING NUMBER 30/BRK0088/SHA/01
AMPLE NUMBER 99/OPCS/BRK0088/01
ISSUE A

orange
hutchison telecom

St James Court
Great Park Road
Almondsbury Park
Bradley Stoke
Bristol
BS12 4QJ