APPLICATION NO:
F/2000/1796

LOCATION:
University Of Reading Students Union Whiteknights Park, Earley Reading.

APPLICANT:
University Of Reading C/O Estates And Building Dept

PROPOSAL:
Proposed erection of One AM radio aerial and One VHF radio aerial.

EARLIEST DATE FOR DECISION: **24/07/2000**

APPLICATION WILL HAVE EXPIRED ON:
10/08/2000

CASE OFFICER: **Emy Circuit**

RAILEX
Marbleboard

WOKINGHAM DISTRICT COUNCIL

TOWN AND COUNTRY PLANNING ACTS

Notification of Approval of Permission

University Of Reading
C/O Estates And Building Dept
P O Box 235
Whiteknights Park
Earley
Berkshire
RG6 6BW

Application Number: F/2000/1796

Parish:	**EARLEY**
Location:	**University Of Reading Students Union, Whiteknights Park, Earley, Reading.**
Proposal:	**Proposed erection of One AM radio aerial and One VHF radio aerial.**

The Wokingham District Council in pursuance of their powers under the above Acts and Regulations hereby **Approve Permission** for carrying out the above development in accordance with the application and the accompanying plans submitted to the Council subject to compliance with the following conditions, the reasons for which are specified hereunder.

Condition
1. The development hereby permitted shall be begun before the expiration of five years from the date of this permission.

Reason
1. In pursuance of Section 91(1) of the Town and Country Planning Act 1990.

John Mitchell
Development Control Manager
Date: 08/08/2000

If this notice grants permission to proceed with the proposal the applicant is reminded that it relates to planning permission only and does not constitute approval under any other legislation including Building Regulations.

TO FILE 2000/1796

Reading
BOROUGH COUNCIL

Mr Tony Lear
Director of Environment

Civic Centre, Reading, RG1 7TD
☎ 0118 939 0900
DX 40124 Reading (Castle Street)
Fax: 0118 958 9770
Minicom 0118 939 0700

Emy Circuit
Wokingham District council
Planning Services
PO Box 157
Shute End
WOKINGHAM
Berkshire
RG40 1WR

Our Ref: WOKADJ
Your Ref: Emy Circuit/F/2000/1796

Direct: ☎(0118) 939 0450

28 September 2000

Your contact is: Christopher Bintcliffe

Dear Emy

UNIVERSITY OF READING STUDENTS' UNION WHITEKNIGHTS PARK EARLEY READING READING

Thank you for consulting Reading Borough on this application. I apologise for the delay in replying.

This is to confirm that the Council has no comment to make in this case, owing to the minor nature of the development.

Yours sincerely

CR Bintcliffe

Christopher Bintcliffe
Planning Technician

WORK SHEET FOR : Emy Circuit

Application Number : F/2000/1796

Applicant : University Of Reading C/O Estates And Building Dept.

Location : University Of Reading Students Union, Whiteknights Park, Earley, Reading.
Proposal : Proposed erection of One AM radio aerial and One VHF radio aerial.

Site Notice Displayed ? :

YES	NO	DATE
✓		4 July

Date of Neighbour Notifications : .....

Date of Site Visit : 4 July 2000

Date Registered : 15/06/2000

Earliest Date for Decision : 24/07/2000

Latest Consultation Date/Site Notice Expiry Date : 24/07/2000

This application will have expired on: 10/08/2000. You need to make a decision 1 day prior to this date for this application to count as determined in less than 8 weeks.

Consultation Responses :

Environmental Health - no objection + comments
Earley TC - "no objection"

Planning Issues :

Identified Settlement
Historic Park and garden
neighbours/streetscene
└ none affected.
(WEMS +6 - University of Reading Employment)

Application Number: F/2000/1796
University of Reading Students Union, Earley

Appraisal: The proposal is for the erection of an AM radio aerial on the students Union building and a VHF aerial on grassland nearby. There are already a number of aerials located on the students union building, although these are not obvious from any distance. The aerials would be some distance from campus boundary and would not be visible from outside it. Therefore, the main consideration is the impact of the aerials, particularly the VHF aerial on the character of the historic park and, as they are not substantial structures, it is not considered that they would be prominent.

Recommendation: *conditional approval*

Application Number F/2000/1796
Conditions/Reasons for Refusal

No	Std Con	Std Reas	Non Std Conditions / Reasons for Refusal
01	SC01	SR02	

RECORD OF SITE VISIT

SITE ADDRESS: University Of Reading Students Union Whiteknights Park Earley Reading.

APPLICATION NUMBER: F/2000/1796

OFFICER: Emy Circuit

DATE OF SITE VISIT: 4 July 2000

1 SITE/STATUTORY NOTICE DISPLAYED ? on lamppost in adjacent car park.

2. DESCRIPTION OF SURROUNDINGS

University campus - building complex adjacent to rough grassland with trees and shrubs - Wooded areas prevent longer views out of the site

3. DESCRIPTION OF SITE/BUILDING

Already has a variety of aerials sited on it

4. RELATIONSHIP TO ADJOINING PROPERTIES

/

5. SITE CONSTRAINTS

TREES

ACCESS/PARKING

LEVELS land drops away from buildings.

BOUNDARY TREATMENT

OTHERS

4|7 S/N on lamppost in carpark

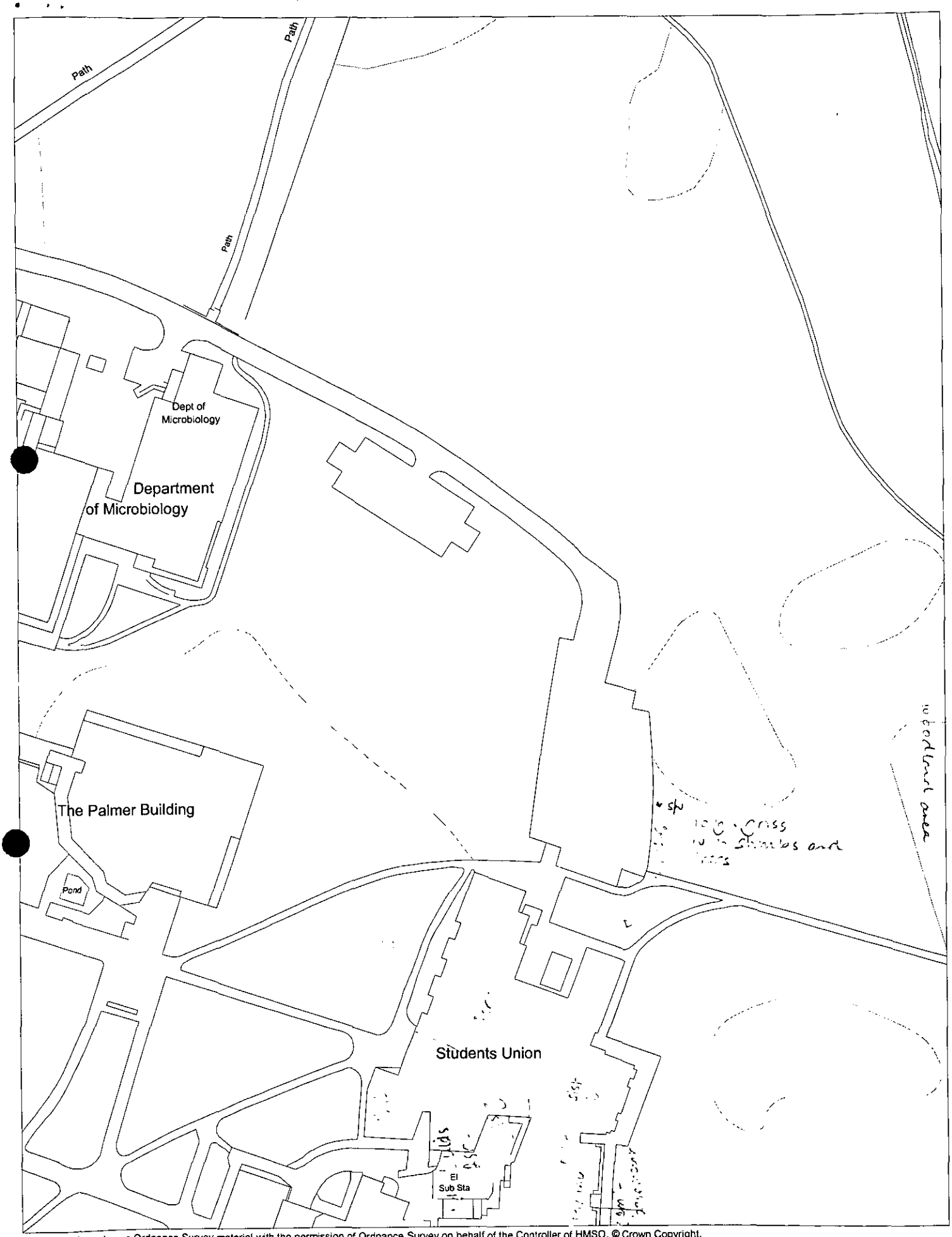

This map is based upon Ordnance Survey material with the permission of Ordnance Survey on behalf of the Controller of HMSO. © Crown Copyright.
Unauthorised reproduction infringes Crown Copyright and may lead to prosecution or civil proceedings.Wokingham District Council Licence LA086134

Development Control Section, Environmental Services, Wokingham District Council.
3 July 2000

Scale: 1 : 1250

N W E S

Tel: (0118) 974 6479

Date: 28 July 2000

My ref: F/2000/1796

Environmental Services Department
Planning Services
P.O. Box 157
Shute End, Wokingham
Berkshire RG40 1WR
Tel: (0118) 974 6000
Fax: (0118) 974 6484
Minicom No: (0118) 974 6991
DX: 33506 – Wokingham

CONFIDENTIAL

Councillor F Rolls
14 Tiptree Close
Earley
RG6 4HS

Dear Councillor

Application Number: F/2000/1796
University Of Reading Students Union, Whiteknights Park, Earley, Reading.
Proposed erection of One AM radio aerial and One VHF radio aerial.

I write to let you know that the above mentioned application has been recommended for APPROVAL: ☑ REFUSAL: ☐ under delegated powers.

If you have any questions please do not hesitate to contact **Emy Circuit** on **(0118) 974 6479**. If you then feel the application needs to be transferred to the next available Development Control Sub-Committee for decision please fill in the form below.
This form must be received no later than 7 August 2000

Yours faithfully

John Mitchell
Development Control Manager

LISTING FORM

Case officer: **Emy Circuit** Application Number: **F/2000/1796**
University Of Reading Students Union, Whiteknights Park, Earley, Reading.
Proposed erection of One AM radio aerial and One VHF radio aerial.

Transfer: Yes ☐ No ☐
Reason for Transfer:

_____

_____

Signed: _____ Date: _____

Councillor F Rolls

NB. It would be helpful for speedy decision making if you could respond, even if you do not wish this application to be transferred.

Tel: (0118) 974 6479

Date: 28 July 2000

My ref: F/2000/1796

CONFIDENTIAL

Councillor A Spratling
18 Moor Copse Close
Earley
RG6 7NA

Environmental Services Department
Planning Services
P.O. Box 157
Shute End, Wokingham
Berkshire RG40 1WR
Tel: (0118) 974 6000
Fax: (0118) 974 6484
Minicom No: (0118) 974 6991
DX: 33506 – Wokingham

Dear Councillor

Application Number: F/2000/1796
University Of Reading Students Union, Whiteknights Park, Earley, Reading.
Proposed erection of One AM radio aerial and One VHF radio aerial..

I write to let you know that the above mentioned application has been recommended for APPROVAL: ☑ REFUSAL: ☐ under delegated powers.

If you have any questions please do not hesitate to contact **Emy Circuit** on **(0118) 974 6479**. If you then feel the application needs to be transferred to the next available Development Control Sub-Committee for decision please contact the Councillor for your area responsible for planning matters as soon as possible

Yours faithfully

John Mitchell
Development Control Manager

Tel: (0118) 974 6479

Date: 28 July 2000

My ref: F/2000/1796

Environmental Services Department
Planning Services
P.O. Box 157
Shute End, Wokingham
Berkshire RG40 1WR
Tel: (0118) 974 6000
Fax: (0118) 974 6484
Minicom No: (0118) 974 6991
DX: 33506 – Wokingham

CONFIDENTIAL

Councillor D Hare
9 Easby Way
Lower Earley
RG6 3XA

Dear Councillor

Application Number: F/2000/1796
University Of Reading Students Union, Whiteknights Park, Earley, Reading.
Proposed erection of One AM radio aerial and One VHF radio aerial..

I write to let you know that the above mentioned application has been recommended for

APPROVAL: ☑ REFUSAL: ☐ under delegated powers.

If you have any questions please do not hesitate to contact **Emy Circuit** on **(0118) 974 6479**. If you then feel the application needs to be transferred to the next available Development Control Sub-Committee for decision please contact the Councillor for your area responsible for planning matters as soon as possible

Yours faithfully

John Mitchell
Development Control Manager

Received by Wokingham District Council

Application No: F/2000/1796

PROPOSAL:
Proposed erection of One AM radio aerial and One VHF radio aerial.

LOCATION:
University Of Reading Students Union, Whiteknights Park, Earley, Reading.

The application is available for inspection at the locations & during the times detailed below:

WOKINGHAM DISTRICT COUNCIL, PLANNING RECEPTION, SHUTE END, WOKINGHAM between 8.30 - 5.00 Monday - Thursday & 8.30 - 4.00 Friday.
(TEL: (0118) 974 6428)
OR
WOODLEY LIBRARY, HEADLEY ROAD, WOODLEY between 9.30am - 7.00pm Mon, Thurs & Fri. 9.30am - 5.00pm Tues, 9.30am - 1.00pm Saturday. (closed all day Wednesday). *If you intend to view this application at Woodley Library or Earley Town Council (see details above & below) please allow 4 days from the date of this notice for delivery of plans.*
OR
EARLEY TOWN COUNCIL, RADSTOCK HOUSE, RADSTOCK LANE, EARLEY between 9.00am – 1.00pm & 2.00pm – 4.30pm Monday to Friday.
(TEL: (0118) 986 8995)

Comments should be sent in writing QUOTING THE APPLICATION NUMBER to the Case Officer Emy Circuit P.O. Box 157 Council Offices, Shute End, Wokingham Berkshire, RG40 1WR to arrive on or before 24/07/2000. Written comments submitted will become available for public inspection.

In view of the very large number of planning applications and letters of comment received, it will not normally be possible for an individual reply to observations made. However any comments will be taken into account when the application is determined and you will be notified of the decision.

Head of Planning and Transportation

29 June 2000

WOKINGHAM D.C. DEVELOPMENT CONTROL

Start date: 15 JUN 2000	
Officer: EXC	Application No. F/2000/1796

Map No. 51. Site 0:52..
Easting: ..... Flood Pln .....
Northing: ..... Mineral .....

Level: ☐ **Sub Committee** ☑ **Delegated** ☐ **Sec. State**
☐ **Incorrect Fee** ☐ **Invalid** ☐ **PD**

Description:
(F) PROPOSED ERECTION OF 1 AM RADIO AERIAL & 1 UHF RADIO AERIAL

Location: STUDENTS UNION WHITEKNIGHTS PARK

Parish: EARLEY Ward: READHATCH 30/6

Applicant: UNIVERSITY OF READING

Fee Received 95-00 Required ..... Additional ..... Refund .....

Enforcement Section (4) *to be notified* ☐ *tick if required*

Additional information required for validation

		Reason	Requested	Received
1	1:2500 OS location plan showing property edged in blue/red			
2	1:500 block plan showing existing & proposed dev. + adj. Properties			
3	Forms unsigned			
4	Correct S 66 certificate			
5	Elevation plans	show aerial mounted on building	requested 26/6 to follow	
6	Floor plans			
7	Metric scale disclaimer			
8	Encroachment letter			
9	Miscellaneous			

APPLN NO. _____

ACTION REQUIRED BY DEVELOPMENT CONTROL

Conservation Area .....

Listed Building 1 2 2*

Advertisement Required .....

Date Site Notice Sent : 29.6.2000 ✓ 30/6

Parish Council Informed - YES / ~~NO~~ 30/6

INTERNAL CONSULTATIONS

Building Control : .....
Landscape .....
Trees .....
Conservation Officer .....
Environmental Health ✓ 30/6
Housing .....
Leisure & Cultural services .....
Public Rights of Way .....
Property .....
District Secretary (only if called in by SOS) .....
Policy & Plans .....
Strategic Planning (JSPU) .....
Minerals (BABTIE) .....
Archaeological Site (BABTIE) : .....
Education .....
Social Services .....
Highways .....

EXTERNAL CONSULTATIONS

Adjacent D P A ✓ 30/6 : Reading
Adjacent Parish : .....
Southern Electricity Board .....
British Gas .....
PSA Oil Pipeline .....
Transco : .....
Environment Agency .....

Rail Track .....
Police Arch. Liaison Officer .....

HERITAGE BODIES

The Georgian Group .....
Ancient Monuments Society .....
Council for British Arch. .....
RCHME .....
Telecommunications (NRPB) : .....
Sport England : .....

OTHERS: (Historic Park / Garden)

.....

.....

No pre-apps found (but covering letter refers to a letter dated 5/5)

NEIGHBOURS:

2x S/N — Shinfield Road & Pepper Lane

✓ 30/6

+ Students Union, Whiteknights Park

FROM: Emy Circuit

DATE: 29 June 2000

EARLEY TOWN CONSULTATION SHEET

Application Number: F/2000/1796

Proposal: Proposed erection of One AM radio aerial and One VHF radio aerial..

Site Address: University Of Reading Students Union, Whiteknights Park, Earley, Reading.

Applicant: University Of Reading C/O Estates And Building Dept.

Your observations are required in respect of this application **by 24/07/2000** .

NO OBJECTION

SIGNED: _____ DATE: 20 JUL 2000

Clerk To Earley Parish/Town Council.

PLANNING SERVICES 31698
POL ILS
DC
CS
COPIES TO: ACK:

WOKINGHAM DISTRICT COUNCIL

MEMORANDUM

From: Joanne Ellis, Environmental Health

My Ref: JPE/lw/20001465

To: Emy Circuit, Planning

Your Ref: F/2000/1796

Date: 10 July 2000

PROPOSED ERECTION OF ONE AM RADIO AERIAL AND ONE VHF RADIO AERIAL

LOCATION: STUDENTS UNION, WHITEKNIGHTS PARK, EARLEY

I have evaluated the above proposals and have no objections to planning consent but have the following comments to make in relation to this proposal:

There have been questions raised as to the possibility of adverse health effects from electromagnetic radiation from telecommunication base stations and their positioning in relation to residential development and, in particular schools.

The National Radiological Protection Board (NRPB) was established by the Radiological Protection Act 1970 and is responsible for conducting research and providing advice and services for protection against ionising and non-ionising radiation's in the U.K. They are continually reviewing the vast body of world-wide research on the subject.

The NRPB's current advice is that there is no proven human health risks from these installations. This position is confirmed by the Chartered Institute of Environmental Health and pressure groups such as Powerwatch network . There are however countries and areas of the world where precautionary measures have been adopted , e.g. New Zealand Ministry of Education has issued a policy statement preventing cellular phone antennas from being sited at state schools in the future.

Further research is currently being undertaken into possible health implications although to date no definitive statement can be made.

The NRPB have set up an Advisory Group to look into this matter. This Group has concluded, in reference to buffer zones for sensitive developments, that there is neither a clear basis from which to derive a meaningful assessment of risk , nor is there any indication of how putative risk might vary with exposure. Thus there is no scientific justification for seeking to reduce exposure in these situations and that a decision to do so must be based on social and economic rather than scientific grounds.

The Chartered Institute of Environmental Health's current policy is as follows :

"The CIEH with regard to overhead and buried high voltage power lines, electricity sub-stations, wind generators, microwave and radio transmitters, mobile telephone base stations and other similar installations emitting electro magnetic radiation (EMR) in close proximity to dwellings considers :

a) That the effect on human health based on current scientific evidence is insignificant and not proven.
b) That there is no convincing national or international scientific research linking Electromagnetic Radiation and deterioration in human health.
c) That a precautionary approach to restricting building or access near such installations (apart from physical safety barriers) cannot be sustained on health grounds alone and if adopted must be based on access, amenity, and public acceptability considerations.
d) That local authorities should adopt a policy on how to address questions from the public on Electromagnetic radiation from such sources."

Please contact me if you require further information.



Joanne Ellis
Senior Environmental Health Officer

Date: 10 July 2000

To: Case Officer

We have received Additional Plans for the following planning application:

Application Number: F/2000/1796

Location: University Of Reading Students Union, Whiteknights Park, Earley, Reading.

Proposal: Proposed erection of One AM radio aerial and One VHF radio aerial.

Applicant: University Of Reading C/O Estates And Building Dept.

Case Officer: Emy Circuit

The new plans show the following: Photograph showing the proposed location of the VHF aerial.

For information only.

Should you have any queries regarding this application please contact the case officer Emy Circuit on (0118) 974 6479.

(RING ONE)

REVISED PLANS | ADDITIONAL PLANS | MINOR AMENDMENTS | ADDITIONAL / REVISED PLANS TO COMPLY WITH CONDITIONS

App No. F/2000/1796 (Planaps) / (Ludhouse) Date Rec. 5 July 2000

Location: University of Reading, Students Union, Whiteknights Park, Earley

Parish Earley

Applicant: University of Reading.

Description of attached plans photograph showing the proposed location of the VHF Aerial

Drawing No's: /

CONSULTEES

Copies of plans will automatically be sent to Woodley Library, Part 1 Reg., Parish Council, Ward Councillors and the Case Officer unless specified.

Please tick which of the following you wish consulted.

OTHERS: _____ Drawing No's

_____ 1. NK (Landscape & Trees) _____ ☐
_____ 2. NK (Env. Design) _____ ☐
_____ 3. XA (Highways) _____ ☐
_____ 4. NF (Building Control) _____ ☐
5. BC/DC Liaison _____ ☐

A full set of plans will be sent to all consultees unless particular drawing No's are specified in the spaces above.

NEIGHBOURS: _____

_____ Date for Responses ✓

FURTHER ACTION

Re-advertise App. Y / (N) (Delete as required)

Redate Application Y / (N) From _____

New Site Notice Y / (N)

New Description _____

CASE OFFICER EXU

Consultations Sent by Admin. on 10.07.PS.

Yellow - Part One Copy
Green - Officer's Copy

The University of Reading

Bursar
R.H.C. Ascott MA FIMgt
Director of Estates and Buildings
G.E. Davies MA(Hons) MA(Arch)

Estates and Buildings Department

Whiteknights, PO Box 235, Reading RG6 6BW
Direct Line: (0118)
Fax: (0118) 975 3499 9316615
Website: http://www.rdg.ac.uk/estates

F/2000/1796
EXC

W029JUNCTIONM_TRC_CLM

4 July, 2000

Wokingham District Council
Planning Department
PO Box 157
Council Offices
Shute End
Wokingham
RG11 1WR

PLA...
PDL
DC
APP
CS
05 ... 2...
COPIES TO: ACK:
FILE:

FAO Mrs Hurst
Planning Administrator

ADDITIONAL PLAN 1796

Dear Madam

JUNCTION 11 – AERIAL INSTALLATION
STUDENTS UNION, WHITEKNIGHTS, UNIVERSITY OF READING

Following our recent telephone conversation with regard to the above Planning application recently submitted, please find enclosed the following to assist you with your consideration/decision.

- 2 No Copies of Photograph – Photograph showing proposed location of new VHF Aerial- on East Elevation of Students Union building.

If you require any additional information please do not hesitate to contact the undersigned.

Yours faithfully

T. Cole

T R Cole
Small Project Manager

Cc: Mr B Elgar, RUSU General Manager

INTO THE MILLENNIUM 2000 THE UNIVERSITY OF READING

(1) STUDENTS UNION

ADDRESS WHITEKNIGHTS PARK PARISH EARLEY

PLOT No. ORD. SHEET No. SU 7371 (51)

BUILDER

Plan No.	Applicant	Description of Development	Date of Decision	Decision
396/50	The University of Reading	outline - Use of Whiteknights Park for gen. Univ. purposes	12.12.50	N/A C/A
04/51	"	Outline & Layout	12.6.51	N/A C/A
/18/64	"	Students Union Bldg.	16.2.64	App. App.
150/73	"	Link ext - Senate c. from Students union bldg	22.2.73	U/A C/A
SE4485		ext. Library Lavatory toilets & Canteen, Health Centre & Showers	5.4.76	App. U/A
BR 13117	STUDENTS UNION	STORE EXTD	21.3.80	App. N/A
12966	"	"	10.4.80	N/A C/A
15334	UNIV. OF READING	CHANGING ROOM & TOILETS	8.5.81	N/A C/A
BR [illegible]26	" "	" "	14.8.81	App. M/A
37/96 2	"	PORTABLE BLDG. TO ACC.	6.3.91	31.3.96
3RA 10260 5		DAY NURSERY ADS. TO STUDENTS' UNION	31.5.91	APP

DATE OF COMPLETION

MINISTRY DECISION

SPECIAL ORDERS

DRAINAGE

(2) ADDRESS STUDENTS UNION PARISH EARLEY

WHITEKNIGHTS PARK

PLOT No. ORD. SHEET No. SU 7371(51)

BUILDER

n No.	Applicant	Description of Development	Date of Decision	Decision
76/63347/TR	UNIV. OF READING	RENEWAL NURSERY	14.3.96	31.7.99
97/65343/F	" " "	1ST EXT FOR Nursery + 2 1ST EXT TO hall.	6.6.97	C/A
8/67869/F		NURSERY UNIT ADS.	22.12.98	C/A
18/68333/T	"	Erect 4 Temp. Bldgs	20.11.98	C/A
P98/7962	"	Refurb main bar, secondary hall & lower level concourse	19.10.98	APP
98/68690/F	"	2 ST. EXTENSION FOR ADS AS CHANGING ROOM TOILETS & MEETING ROOM	5.1.99	C/A
1916924 51F	"	Install disabled persons lift, Motor room & lobby area	20.4.99	C/A

DATE OF COMPLETION

MINISTRY DECISION

FP98/7948	"	Ext - replace changing rooms	1.9.98	APP
FP99/8361	"	S/St (childrens nursery)	11.2.99	APP

The University of Reading

Bursar
R.H.C. Ascott MA FIMgt
Director of Estates and Buildings
G.E. Davies MA(Hons) MA(Arch)

Estates and Buildings Department

Whiteknights, PO Box 235, Reading RG6 6BW
Direct Line: (0118) 9316615
Fax: (0118) 975 3499
Website: http://www.rdg.ac.uk/estates

15. JUN. 2000 1756

W029_AERIAL_INSTALL_TRC__MG

Mrs L Baker
Planning Officer
Wokingham District Council
PO Box 157
Council Offices
Shute End
Wokingham
RG11 1WR

13 June, 2000

Dear Mrs Baker

Re: ***Junction 11***
Aerial Installation
Students Union
University of Reading

Please find enclosed the following drawings and documents with regard to the above for your consideration under the Town and Country Planning Acts.

(a) 6 No. copies of Planning Application Forms Parts 1 and 2, duly completed
(b) 1 No. copy of Certificate A
(c) 6 No. copies of our drawings numbered W029 B 254 and B255 showing locations of the VHF aerial, together with the red and blue lines, showing the site location and adjoining land ownership
(d) 6 No. copies of drawing of VHF aerial to be located on the roof of Students Union building
(e) 6 No. copies of drawing and photograph of low power AM radio transmitting aerial - to be located adjacent to the Student Union building
(f) 1 No. cheque to the value of £95.00, being the prescribed fee payable

We would ask you to refer to our letter dated 5 May 2000 which details the purpose and use of these aerials.

We would ask for your earliest consideration of this application, and if it is determined that Planning Approval is not required we would appreciate the return of the drawings, documents and cheque.

Yours sincerely

T. Cole

T R Cole
Small Projects Manager

Cc: Mr B Elger RUSU
Mr T Foulsham Radica

INTO THE MILLENNIUM
2000
THE UNIVERSITY OF READING

1789/a

SECTION 66 CERTIFICATE

Application No.

15. JUN. 2000 * 1796

Please fill in both Certificate A, B, C or D and the Agricultural Holdings Certificate. Delete sections not relevant.

(a) "Owner" means a person having a freehold interest or leasehold interest the unexpired term of which is not less than 7 years.

OR

●

+ See Note (a) to Certificate A

OR

●

(b) Insert description of steps taken.

(c) Name of local newspaper circulating in the area where the land is situated.

(d) Date of publication (which must be not earlier than the beginning of the period of 21 days ending with the date of the application).

CERTIFICATE A

I certify that:

at the beginning of the period of 21 days ending with the date of the accompanying application, nobody, except the applicant, was the owner of (a) of any part of the land to which the application relates.

CERTIFICATE B

I certify that:

I have/The applicant has* given the required notice to everyone else who, at the beginning of the period of 21 days ending with the date of the accompanying application was the owner (a) of any part of the land to which the application relates, as listed below.

Owner's(a) name	Address at which notice was served	Date on which notice was served

CERTIFICATE C

I certify that

● I/The applicant* cannot issued a certificate in accordance with either paragraph (a) or paragraph (b) of Section 66(1) of the Act in respect of the accompanying application.

● I have/The applicant has* given the required notice to the persons specified below, being persons who at the beginning of the period of 21 days ending with the date of the application were owners (a) of any part of the land to which the application relates.

Owner's(a) name	Address at which notice was served	Date on which notice was served

● I have/The applicant has* taken all reasonable steps open to me/him/her* to find out the names and addresses of the other owners (a) of the land, or of a part of it, but have/has* been unable to do so. These steps were as follows:

(b) .....

.....

● Notice of the application as attached to this Certificate, has been published in the (c) .....

on (d) .....

1789/b

CERTIFICATE D

I certify that

● I/The applicant cannot issue a certificate in accordance with paragraph (a) of Section 66 of the Act in respect of the accompanying application.

OR

● I/The applicant have/has taken all reasonable steps open to me/him/her to find out the names and addresses of everyone else who, at the beginning of the period of 21 days beginning with the date of application was the owner (a) of any part of the land to which the application relates, but have/has been unable to do so. These steps were as follows:

(b) . . . . . .

. . . . . .

(b) Insert description of steps taken

(c) Insert name of local newspaper circulating in the area where the land is situated.

(d) Insert date of publication (which must not be earlier than the beginning of the period of 21 days ending with the date of the application).

● Notice of the application as attached to this Certificate, has been published in the (c) . . . . . .

on (d) . . . . . .

ALL APPLICANTS MUST COMPLETE THIS SECTION

If any of the site is part of an area of land which is let or there is an agreement to let the land for agricultural purposes to a tenant, it may be an agricultural holding. Further advice may be obtained from the Department.

Agricultural Holdings Certificate

One or other section must be crossed through as not applicable.

If the applicant is the sole agricultural tenant he or she must delete the first alternative and insert "not applicable" as the information required by the second alternative.

● None of the land to which the application relates is, or is part of, an agricultural holding.

OR

● I have/The applicant has given the required notice to every person other than my/him/herself who, at the beginning of the period of 21 days ending with the date of the application, was a tenant of an agricultural holding on all or part of the land to which the application relates, as follows:

Tenant's name	Address at which notice was served	Date on which notice was served

Signed . . . . . J. Cole

On behalf of . . . . . THE UNIVERSITY OF READING

Date 14:06:2000

TOWN AND COUNTRY PLANNING ACT, 1990
TOWN & COUNTRY PLANNING GENERAL DEVELOPMENT ORDER 1988
Certificate under Section 66

1769a

WOKINGHAM DISTRICT COUNCIL
PLANNING APPLICATION

PART 1

APPLICATION FOR PERMISSION TO CARRY OUT DEVELOPMENT - TOWN AND COUNTRY PLANNING ACTS

Please answer **ALL QUESTIONS** in **BLOCK LETTERS**. If a question is not applicable, answer **N/A** in space. Please submit **SIX** copies of this form and plans to:-

THE DISTRICT PLANNING OFFICER,
WOKINGHAM DISTRICT COUNCIL,
PLANNING DEPARTMENT,
P.O. Box No. 157,
COUNCIL OFFICES,
SHUTE END,
WOKINGHAM,
BERKSHIRE, RG11 1WR

FOR OFFICE USE ONLY

15 JUN 2000* 17-6

1.	APPLICANT'S NAME	UNIVERSITY OF READING.
	ADDRESS	WHITEKNIGHTS, PO BOX 217
		READING, BERKS
	POST CODE	RG66AH PHONE 0118 9875123
2. If the applicant has an agent, all correspondence will be sent to the agent	AGENT'S NAME	ESTATES AND BUILDING DEPT
	ADDRESS	WHITEKNIGHTS, POBOX 235
		READING, BERKS
	POST CODE	RG66EW PHONE 0118 9316615
3. On the plans show the SITE outlined in RED. Show also OTHER land in the applicant's ownership or control in BLUE.	SITE LOCATION	STUDENTS UNION WHITEKNIGHTS
4. WHAT IS THE APPLICATION FOR ? Give brief details and state for what purpose this site and any buildings will be used.		ERECTION OF 1N° AM RADIO AERIAL AND 1N° VHF RADIO AERIAL
5. Give the area in hectares or part of a hectare	AREA OF SITE	120 HECTARES
6. State the applicant's interest in the land e.g. owner, prospective purchaser, lessee	OWNERSHIP	UNIVERSITY OF READING.
List all the plans and drawings submitted with the application	PLANS/DRAWINGS	6N° COPIES OF DRAWING N°. W029 B254 AND 6N° COPIES OF DRAWINGS INDICATING AM & VHF AERIALS

8. DOES THE APPLICATION INVOLVE ANY OF THE FOLLOWING ? NO.
Tick the boxes(x)

CHANGE OF USE	☐	REDEVELOPMENT	☐
ERECTION OF NEW BUILDING	☐	ALTERATION or EXTENSION	☐

9. WHAT TYPE OF APPLICATION IS THIS ? Tick one box only

OUTLINE PERMISSION	☐	See question 10
FULL PERMISSION	☒	
APPROVAL OF DETAILS/RESERVED MATTERS	☐	State relevant outline permission number. Also complete Question 10
TEMPORARY PERMISSION	☐	State period required
RELAXATION OF CONDITIONS	☐	State relevant application number. Conditions to be relaxed

10. IF THIS IS AN OUTLINE APPLICATION OR AN APPROVAL OF RESERVED MATTERS, which details, if any, do you wish to be considered as part of this application ? N/A

SITING	☐		
EXTERNAL APPEARANCE	☐	DESIGN	☐
MEANS OF ACCESS	☐	LANDSCAPING	☐

11. WHAT IS THE EXISTING USE OF THE LAND AND/OR BUILDING(S) e.g. residential, industrial, etc. If the site is vacant say so, and also state its previous use and when that ceased.

VACANT – GRASSED AREA

12. DOES A PUBLIC RIGHT OF WAY CROSS OR ABUT THE SITE OR THE PROPOSED ACCESS?

YES/NO

If yes, show existing route(s) and any proposed alternatives on the plans

13. ARE THERE ANY TREES ON THE SITE? IF YES, ARE ANY TO BE FELLED?

YES/NO

If yes, please show their positions, spread and species on the plans and which, if any, are to be felled.

14. STATE EXTERNAL MATERIALS TO BE USED.

AM AERIAL – FIBREGLASS
COLOUR: WHITE
VHF AERIAL – ALUMINIUM
COLOUR: SELF COLOUR.

15. HOW WILL THE SITE BE ENCLOSED? Say whether walls, fences or hedges, and give height, colour and materials. If the site is divided into plots, say how each is to be enclosed.

NO ENCLOSURE

16. HOW WILL SURFACE WATER BE DISPOSED OF?

N/A

17. HOW WILL FOUL SEWAGE BE DISPOSED OF?

To existing system YES/NO N/A

If no, please give details

18. WHAT ARE THE ACCESS ARRANGEMENTS?
AS EXISTING
AS PROPOSED
Give details of pedestrian and vehicular access

N/A

19. HAS PROVISION BEEN MADE FOR THE DISABLED? See notes for applicants

N/A

20. IF THIS PROPOSAL INVOLVES RESIDENTIAL DEVELOPMENT OR THE LOSS OF RESIDENTIAL UNITS, COMPLETE THE FOLLOWING TABLE

N/A

	No. OF DWELLINGS/HABITABLE ROOMS PROPOSED	TO BE RETAINED	TO BE LOST
HOUSE	/ *	/ *	/ *
BUNGALOW	/ *	/ *	/ *
FLAT/MAISONETTE	/ *	/ *	/ *
OTHER	/ *	/ *	/ *

* STATE No. OF HABITABLE ROOMS

21. DOES THE PROPOSAL INVOLVE ANY NON-RESIDENTIAL BUILDING OR USE?

YES/NO If YES, complete Part 2 of the form

22. DOES THE PROPOSAL INVOLVE THE WINNING, WORKING OR PROCESSING OF MINERALS; THE DISPOSAL OF MINERAL WASTE, OR THE DEPOSIT OR PROCESSING OF REFUSE AND WASTE MATERIALS?

YES/NO If YES, please ask for and complete Part 3 of the form

23. STATE THE FEE ENCLOSED WITH THIS APPLICATION The current scale of fees is enclosed. If you believe a reduced fee or no fee is payable, say why.

£95

I hereby apply for permission in respect of the particulars described above and in the attached plans and drawings. If planning permission is granted, the development must be carried out strictly in accordance with the approved plans. Failure to do so could result in enforcement action being taken. Permission under the Town & Country Planning Acts does not obviate the possible need to apply for Building Regulations approval.

SIGNED T. Cole ON BEHALF OF UNIVERSITY OF READING DATE 14:06:2000

Before submitting the application check that it is complete, that all questions have been answered and that the site boundary and the new work are clearly edged in red on the plans. Every application must be accompanied by the appropriate certificate and fee. See "NOTES TO HELP APPLICANTS".

1769c

PLANNING APPLICATION

PART 2

This part of the form need only be completed if the application involves non-residential development. Please answer all questions in print or block letters. If the answer is not applicable, write N/A in the space. You may wish to amplify your answers in a covering letter.

24. STATE THE GROSS FLOOR SPACE (by external measurement) OF ALL BUILDINGS TO WHICH THIS APPLICATION REFERS. Please give all floor areas in SQUARE METRES. N/A.

	USE CLASS	Existing floor space		Proposed additional floorspace created by	
		Retained in existing use	Lost by change of use or demolition	New building	Change of use
A1	SHOPS				
A2	FINANCIAL AND PROFESSIONAL SERVICES				
A3	FOOD AND DRINK				
B1(a)	OFFICE (other than A2)				
B1 (b)	RESEARCH AND DEVELOPMENT				
B1 (c)	LIGHT INDUSTRIAL				
[redacted]	GENERAL INDUSTRIAL				
B3-7	SPECIAL INDUSTRIAL				
B8	STORAGE OR DISTRIBUTION				
C1	HOTELS AND HOSTELS				
C2	RESIDENTIAL INSTITUTIONS				
D1	NON-RESIDENTIAL INSTITUTIONS				
D2	ASSEMBLY AND LEISURE				
OTHER	Please Specify				
OTHER	Please Specify				
	TOTAL				

25. IF C1 OR C2 USE IS PROPOSED, PLEASE STATE NUMBER OF BED SPACES N/A

[redacted] WHAT PROVISION IS BEING MADE FOR PARKING? N/A

	Cars	Lorries
Existing		
Proposed		

27. DESCRIBE THE ACTIVITY OR PROCESSES TO BE CARRIED ON
Please provide details of any equipment, plant or machinery to be installed and any end products. You may wish to amplify your answers in a covering letter.

AERIALS TO PROVIDE LOW POWER RADIO RECEPTION TO WHITE-KNIGHTS CAMPUS - WITHIN A 1KM RADIUS OF AERIALS.

28. WHO WILL OCCUPY THE PREMISES?
a) Give the name and current operating address of the proposed occupier
b) Will these premises be vacated?

N/A

29. IF KNOWN, HOW MANY PEOPLE ARE LIKELY TO BE EMPLOYED ON SITE AFTER COMPLETION OF THE DEVELOPMENT? N/A

Existing Staff	Transferred Staff	New Staff	Total

30. DOES THE PROPOSAL INVOLVE THE USE OR STORAGE OF ANY OF THE HAZARDOUS SUBSTANCES LISTED IN THE NOTES?
If so, state this material, the quantity and method of storage.

NO.

Before submitting the application check that it is complete, that all questions have been answered and that the site boundary and the new work are clearly edged in red on the plans. Every application must be accompanied by the appropriate certificate and fee. See "NOTES TO HELP APPLICANTS".

1769d

YOUR PLANNING APPLICATION

WHY DO YOU NEED TO MAKE A PLANNING APPLICATION ?

New buildings, major alterations and enlargement of existing buildings, and many changes in the use of buildings and land need planning permission.
The Town and Country Planning Acts impose a duty on Local Authorities to control these changes, and this means that a balance has to be found between the need and pressure for change, and the desire to protect the character of settlements and the countryside.
The merits of each application are, therefore, carefully examined.

WHAT ELSE MAY YOU HAVE TO DO ?

Listed Building Consent:	for works to a Listed Building; or for demolition works on land within the curtilage of a Listed Building or within a Conservation Area.
Advertisement Consent:	for the display of advertisements or signs
Building Regulation Approval:	for most new building or construction work.

Special forms are available for these types of applications.

You should also check whether there are any other regulations with which you may need to comply.

WHAT HAPPENS TO THE APPLICATION ?

It will first be checked to see if it is complete and if it is, it will be registered.

Consultations will be carried out with public and other bodies, such as the Highway Authority, or Local Parish Councils.

Publicity may be given to allow local people the opportunity to comment on your proposals.

The application will be considered in relation to the Council's planning policies and guidelines, the past history of decisions on that site or in the locality, other standards (such as parking, or visibility at road junctions), and any other material considerations.

The site will be visited by a Planning Officer You may be asked to submit more information, or to amend your application.

The application will then be considered either by a Planning Committee or Sub Committee (made up of Councillors) or by the Chief Officer responsible for planning matters. Objections to an application will be taken into consideration by the Committee or the Chief Officer.

Shortly after the application has been determined, you will receive a Decision Notice.

HOW LONG WILL IT TAKE ?

An application will generally be determined within eight weeks although a longer period may sometimes be required for a complicated application.

WHAT SORT OF DECISION CAN BE MADE ?

Your application may be approved.

Your application may be approved subject to certain conditions. These could impose restictions on the use of land or buildings, or require further details to be approved at a later stage, (e.g. materials or landscaping).
You may appeal against the conditions, but this opens the entire permission to review by the Secretary of State.

Your application may be refused. The reason will be listed on the Decision Notice.

WHAT HAPPENS IF THE APPLICATION IS REFUSED ?

You have the right to appeal against the refusal to the Secretary of State, but you have to do that within six months.
Appeals can be dealt with by written representations by both sides, or by a Public Inquiry.
You may ask the Planning Officer whether an amended application would be more likely to receive planning permission.

DATA PROTECTION ACT 1984

'Information contained in this form is likely to be personal data within the terms of the Data Protection Act 1984, and as such will be held by the Council on computer (such as the PLANAPS applications processing system) and may be used by the Council only for purposes registered under the terms of the Data Protection Act.'

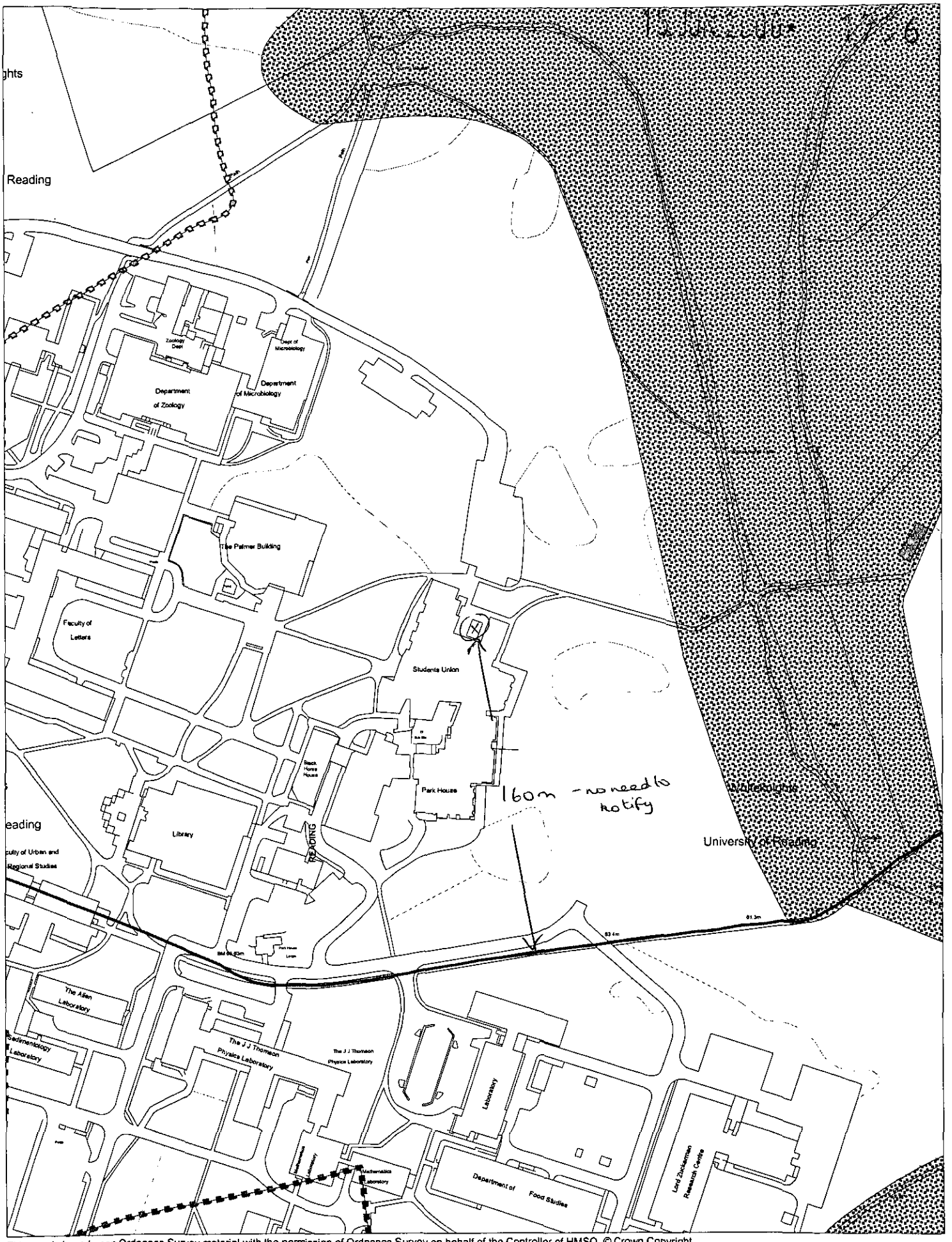

This map is based upon Ordnance Survey material with the permission of Ordnance Survey on behalf of the Controller of HMSO. © Crown Copyright.
Unauthorised reproduction infringes Crown Copyright and may lead to prosecution or civil proceedings.Wokingham District Council Licence LA086134

Development Control Section, Environmental Services, Wokingham District Council.

20 June 2000

Scale: 1 : 2500

N W E S

ADDITIONAL PLAN

1796

Photograph showing Proposed Location of New VHF Aerial - on East Elevation of Students Union Building

15. JUN. 2000* 1796

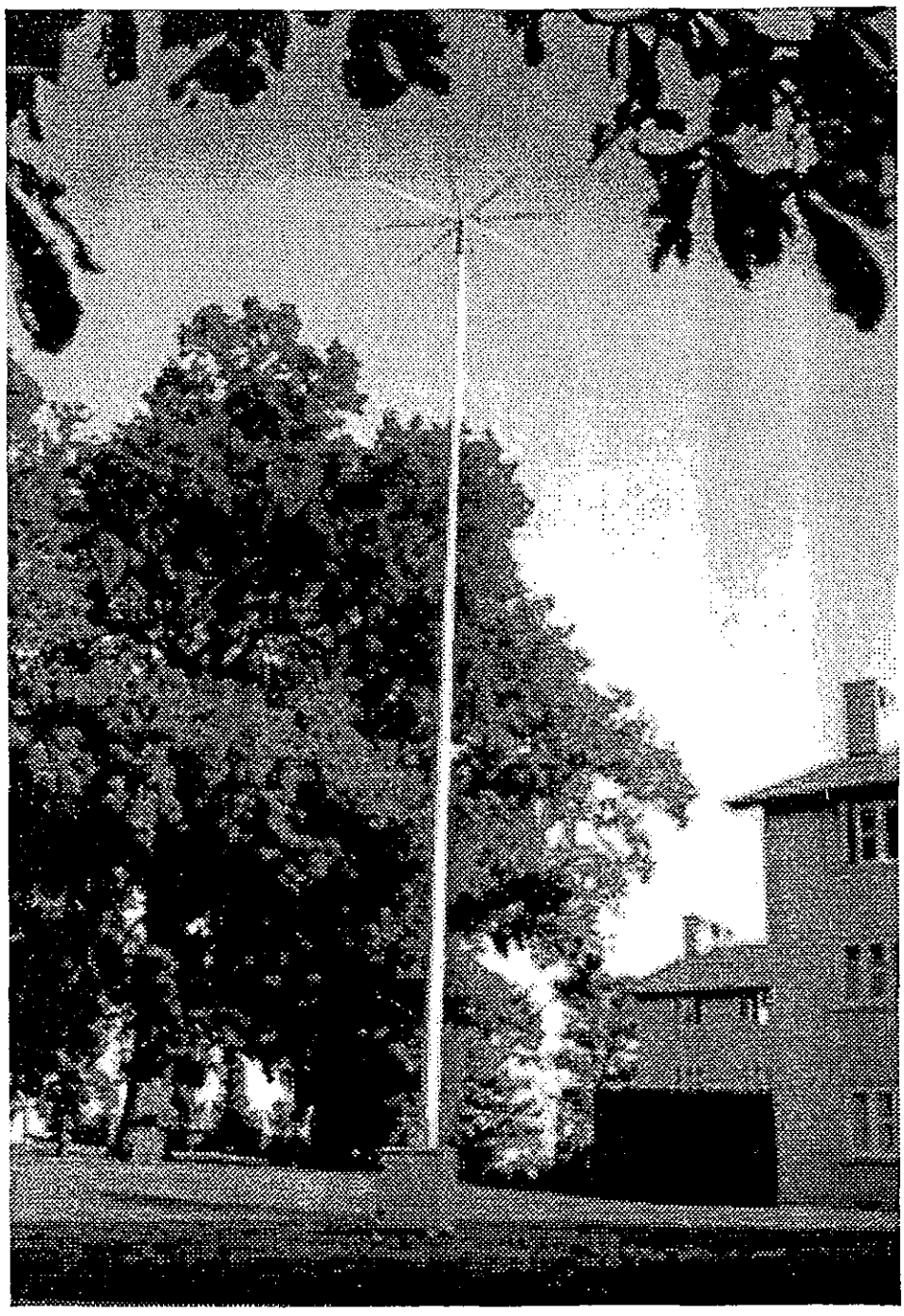

Low Power AM radio transmitting aerial

10 metre fibreglass mast

APPROVED

example of installation
AM 1404 URE - University of Essex

Radica
BROADCAST SYSTEMS

Radica Broadcast Systems Limited
18 Bolney Grange Industrial Park, Hickstead, Haywards Heath West Sussex RH17 5PB UK
Tel (+44) (0)1444 258265 Fax. (+44) (0)1444 253288 e-mail: radio@radica.com
website: http://www.radica.com/radio/

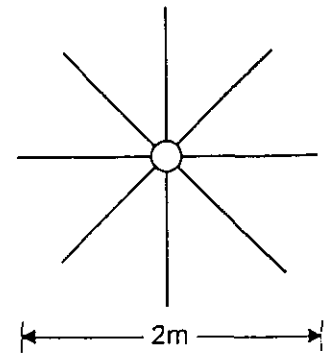

PLAN OF CAPACITANCE HAT

Radials: 3/8" aluminium tube

TITLE: AERIAL MAST ELEVATION			
EQPMT: AE50 fibreglass MF AERIAL			
DATE: 31/3/99	ISS: 2.3	FILE: Mast drawing.cdr	
©	DRWN: TCF	CHKD:	REL:
Radica BROADCAST SYSTEMS	18 Bolney Grange Industrial Park Hickstead, HAYWARDS HEATH West Sussex RH17 5PB UK Tel.: 01444 258255 Fax: 01444 258266	DRAWING NUMBER: 15032	

MAST NOT TO SCALE
Width exaggerated for clarity

Actual width (diameter) at base: 140mm
Tapering to @ 10m: 50mm

Material: glassfibre
Colour: white
(other colours available to order)

APPROVED

TYPE 7031/7039

VHF Two-element yagis

Two-element yagis, manufactured to full telecommunications specification, incorporating the patented 'inverse' balun and giving increased bandwidth and improved matching.

The balun and connections are completely sealed and moulded in carbon-loaded polythene.

The yagis are supplied complete with 3 m of UR67 coaxial cable terminated with an 'N' type jack or plug as ordered. Stand-off booms are supplied with each antenna for back mounting.

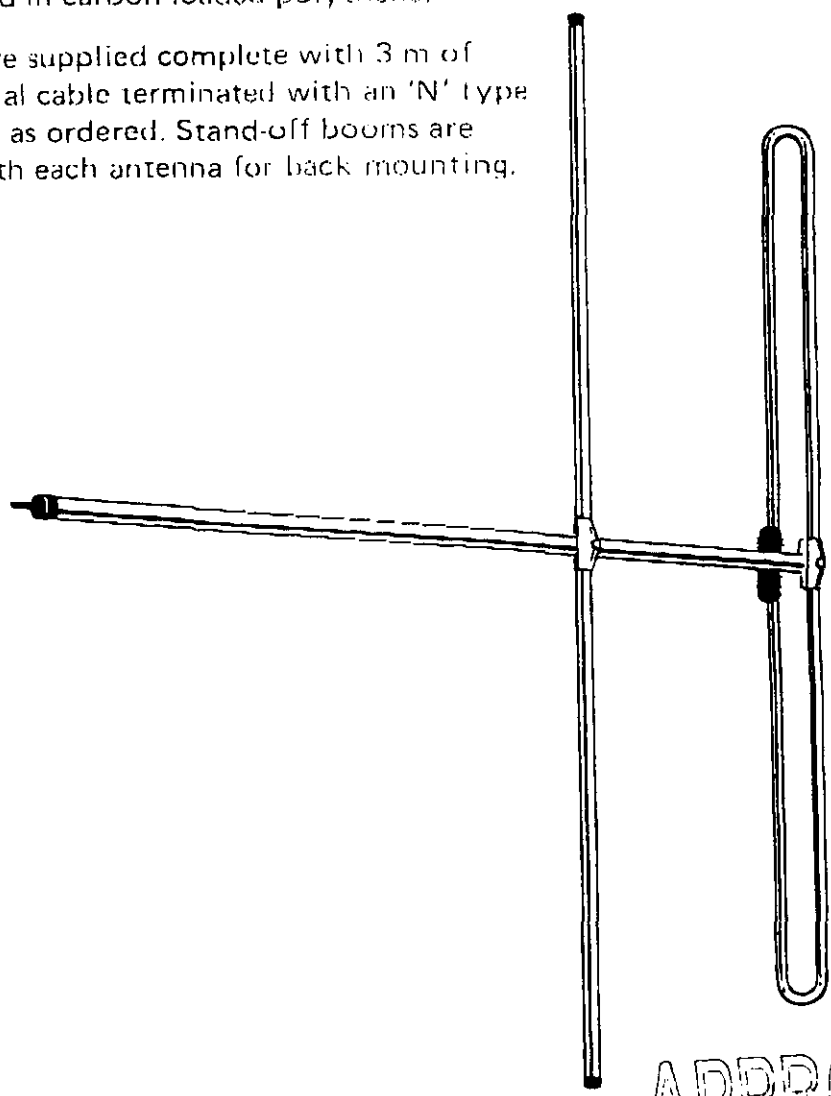

APPROVED

Jaybeam Limited