APPLICATION NO:
TL/2001/5563

LOCATION:
Clearcomm Solutions Ltd Cyber House Molly Millars Lane, Wokingham.

APPLICANT:
Orange P C S L C/OClive Illingworth

PROPOSAL:
Proposed alterations to existing telecommunications equipment with 6 x dual-band, dual- polar antennas, 4 x microwave dish antennas up to 0.6m diameter each, 10 x equipment cabins and associated works.

EARLIEST DATE FOR DECISION: **24/01/2002**

APPLICATION WILL HAVE EXPIRED ON:
15/02/2002

CASE OFFICER: **Elaine Vashi**

673

00

RAILEX
Marbleboard

EASIFILE EP7

WOKINGHAM DISTRICT COUNCIL

TOWN AND COUNTRY PLANNING ACTS

REFUSAL OF PRIOR APPROVAL OF TELECOMMUNICATIONS NOTIFICATION

Mr C Illingworth
Orange
Black Arrow House
2-3rd Floor
2 Chandros Road
London
NW10 6NF

Notification No: TL/2001/5563

Parish: Wokingham

Proposal: Proposed replacement of existing telecommunications installation with 6 no. dual band polar antennas, 4 no. microwave dish antennas, 10 equipment cabins and associated support steelwork and feeder management systems

Location: Clearcomm Solutions Ltd., Cyber House, Molly Millars Lane, Wokingham

The Wokingham District Council in pursuance of their powers under Part 24 of the Town and Country (General Permitted Development) (Amendment) Order 1998 **APPROVES** prior approval for the above stated telecommunications equipment.

T.G Watson

Development Control Manager

Date: 13th February 2002

WOKINGHAM UNITARY
Aiming for Excellence

PLANNING SERVICES

Fax Cover Sheet

DATE: 14/02/02

TO: Mr C Illingworth

FROM: E Vashi **Planning Services.**

NUMBER OF PAGES INCLUDING THIS HEADER SHEET: 2

RECIPIENT FAX NUMBER: 0208 9634101

OUR FAX NUMBER: (0118) 974 6484

SUBJECT: TL/2002/5563

NOTES:
PRIOR-APPROVAL NOTIFICATION.

* * * COMMUNICATION RESULT REPORT (14.FEB.2002 12:03) * * *

TTI WDC PLAN&TRANSPORT

FILE	MODE	OPTION	ADDRESS (GROUP)	RESULT	PAGE
939	MEMORY TX		902089634101	OK	P. 2/2

REASON FOR ERROR
E-1) HANG UP OR LINE FAIL
E-2) BUSY
E-3) NO ANSWER
E-4) NO FACSIMILE CONNECTION

PLANNING SERVICES	HPT 52485
POL	TLS
DC EV	ENF
APP	
CS	

WOKINGHAM TOWN COUNCIL CONSULTATION SHEET 31 JAN 2002

COPIES TO:	ACK:
	FILE:

Case officer: Elaine Vashi

Application Number: TL/2001/5563

Proposal: Proposed alterations to existing telecommunications equipment with 6 x dual-polar antennas, 4 microwave dish antennnas up to 0.6m diameter each, 10 x equipment cabins and associated works

Site Address: Clearcomm Solutions Ltd, Cyber House, Molly Millars Lane, Wokingham

Applicant: Orange PCS Ltd C/O Clive Illingworth

Your observations are required in respect of this application **by 24/01/02**

At its meeting on 22 January 2002, the Planning & Transportation Committee resolved to make the following observation:

No objection

SIGNED: _____ **DATE:** 25/01/02

CLERK TO Wokingham Town Council

TL/2001/5563

Received by Wokingham District Council

Application No: TP/2001/5514

Proposal:
Temporary permission for retention of 15 metre high trailer based radio mast equipment cabin and ancillaries until March 2003.

Location:
Land Adjoining 618, Reading Road, Winnersh, Wokingham.

The application is available for inspection at Wokingham District Council's offices during the following times:

PLANNING DEPARTMENT, SHUTE END, WOKINGHAM TEL (0118) 974 6428
8.30 - 5.00 Monday - Thursday & 8.30 - 4.00 Friday

WOODLEY LIBRARY HEADLEY ROAD WOODLEY 9.30am - 7.00pm Mon, Thurs & Fri. 9.30am - 5.00pm Tues, 9.30am - 1.00pm Saturday and 1.00pm - 4.00pm Sunday. Library closed all day Wednesday. If you intend to view this application at Woodley Library please allow 4 days from the date of this letter for delivery of plans and remember to quote application number TP/2001/5514 to enable the library staff to locate the correct information.

Comments should be sent in writing QUOTING THE APPLICATION NUMBER to the Case Officer Elaine Vashi P.O. Box 157 Council Offices, Shute End, Wokingham Berkshire, RG40 1WR to arrive on or before 10/01/2002. Written comments submitted will become available for public inspection.

In view of the very large number of planning applications and letters of comment received, it will not be possible for an individual reply to be issued to observations made. However any comments will be taken into account when the application is determined and you will be notified of the decision.

Head Planning and Transportation

17 December 2001

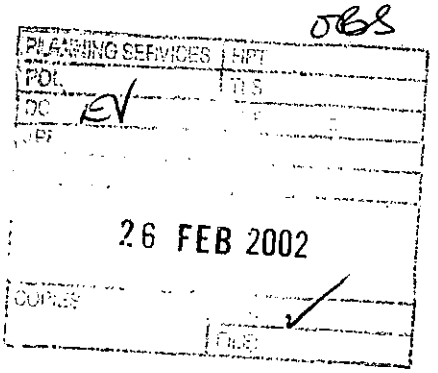

Mr S Hall & Miss V Trafford
616 Reading Road
Winnersh
Wokingham
Berkshire
RG41 5HE

Date : 26th February 2002

Wokingham District Council
Elaine Vashi
Environmental Services Dept
Also by fax : 0118 9746484

Dear Sirs,

RE : Application No : TP/2001/5514
Land Adjoining 618 Reading Road Winnersh Wokingham
Proposal :Temporary permission for retention of 15 Metre high trailer based radio mast equipment cabin and ancillaries until March 2003.

Further to your letter of 17th December, we write to **strongly** oppose the above application. This mast was erected without any warning and prior notice which we feel is not in the best interest of the public. We would like to also point out that the works which were carried out to lay cables etc for the mast also caused us disruption and again we were not given any notice of these works. This also seems to be rather a lot of work for something which is supposed to be **temporary**.

Firstly, we have a 9 month old baby and are extremely worried about the health implications which the above radio mast may cause him.

The above mentioned radio mast can be seen from **all** rooms at the rear of our property and it is a complete 'eyesore'.

We have even had people coming up the track at the side of our property, from as far away as Woodley, inquiring who the mast belongs to.

We ourselves applied for planning permission for a single residential property to be erected at the rear of our property. This application was denied by Wokingham District Council. One of the grounds our application was denied was because this area is classed as rural and therefore not appropriate. We would

therefore surely expect the same treatment for the erection of this **industrial** mast which is only a stones throw away from the site of our application.

We are hoping to put our property on the market this year and we have no doubt the above radio mast will have **severe** effects on the value of our property. Our property is our investment and we will not let anything jeopardize our future or the future investment for our children.

We therefore would like to see this radio mast completely removed as soon as possible. There must surely be a more appropriate site in Wokingham or the surrounding area for this mast to be erected rather than on the edge of residential properties.

Yours faithfully,
S. HALL & V. TRAFFORD.

cc.Mr D B Ledger – Planning Enforcement Officer. Via e-mail : daniel.ledger@wokingham.gov.uk

Tel: (0118) 974 6451

Date:

My ref: TL/2001/5563

CONFIDENTIAL

WOKINGHAM UNITARY
Aiming for Excellence

Environmental Services Department
Planning Services
P.O. Box 157
Shute End, Wokingham
Berkshire RG40 1WR
Tel: (0118) 974 6000
Fax: (0118) 974 6484
Minicom No: (0118) 974 6991
DX: 33506 – Wokingham

Councillor Marinos
10 Wildcroft Drive
Wokingham
RG40 3NY

Dear Councillor

Application Number: TL/2001/5563
Clearcomm Solutions Ltd Cyber House, Molly Millars Lane, , Wokingham.
Proposed alterations to existing telecommunications equipment with 6 x dual-band, dual- polar antennas, 4 x microwave dish antennas up to 0.6m diameter each, 10 x equipment cabins and associated works.

I write to let you know that the above mentioned application has been recommended for APPROVAL: ☐ REFUSAL: ☐ under delegated powers.

If you have any questions please do not hesitate to contact **Elaine Vashi** on **(0118) 974 6451**. If you then feel the application needs to be transferred to the next available Development Control Committee for decision please fill in the form below.
This form must be received no later than _____

Yours faithfully

Principal Development Control Officer

LISTING FORM
Case officer: **Elaine Vashi** Application Number: **TL/2001/5563**
Clearcomm Solutions Ltd Cyber House, Molly Millars Lane, , Wokingham.
Proposed alterations to existing telecommunications equipment with 6 x dual-band, dual- polar antennas, 4 x microwave dish antennas up to 0.6m diameter each, 10 x equipment cabins and associated works.

Transfer: Yes ☐ No ☐
Reason for Transfer:

_____

_____

Signed: _____ Date: _____

Councillor Marinos

NB. It would be helpful for speedy decision making if you could respond, even if you do not wish this application to be transferred.

Tel: (0118) 974 6451

Date:

My ref: TL/2001/5563

CONFIDENTIAL

WOKINGHAM UNITARY
Aiming for Excellence

Councillor D Morgan
Valois Farm
Range Road
Wokingham
RG40 3NR

Environmental Services Department
Planning Services
P.O. Box 157
Shute End, Wokingham
Berkshire RG40 1WR
Tel: (0118) 974 6000
Fax: (0118) 974 6484
Minicom No: (0118) 974 6991
DX: 33506 – Wokingham

Dear Councillor

Application Number: TL/2001/5563
Clearcomm Solutions Ltd Cyber House, Molly Millars Lane, , Wokingham.
Proposed alterations to existing telecommunications equipment with 6 x dual-band, dual- polar antennas, 4 x microwave dish antennas up to 0.6m diameter each, 10 x equipment cabins and associated works.

I write to let you know that the above mentioned application has been recommended for APPROVAL: ☐ REFUSAL: ☐ under delegated powers.

If you have any questions please do not hesitate to contact **Elaine Vashi** on **(0118) 974 6451**. If you then feel the application needs to be transferred to the next available Development Control Committee for decision please fill in the form below.
This form must be received no later than _____

Yours faithfully

Principal Development Control Officer

LISTING FORM

Case officer: **Elaine Vashi** Application Number: **TL/2001/5563**
Clearcomm Solutions Ltd Cyber House, Molly Millars Lane, , Wokingham.
Proposed alterations to existing telecommunications equipment with 6 x dual-band, dual- polar antennas, 4 x microwave dish antennas up to 0.6m diameter each, 10 x equipment cabins and associated works.

Transfer: Yes ☐ No ☐
Reason for Transfer:

_____

_____

Signed: _____ Date: _____

Councillor D Morgan

NB. It would be helpful for speedy decision making if you could respond, even if you do not wish this application to be transferred.

Tel: (0118) 974 6451

Date:

My ref: TL/2001/5563

WOKINGHAM UNITARY
Aiming for Excellence

CONFIDENTIAL

Councillor King
C/O Wokingham District Council

Environmental Services Department
Planning Services
P.O. Box 157
Shute End, Wokingham
Berkshire RG40 1WR
Tel: (0118) 974 6000
Fax: (0118) 974 6484
Minicom No: (0118) 974 6991
DX: 33506 – Wokingham

Dear Councillor

Application Number: TL/2001/5563
Clearcomm Solutions Ltd Cyber House, Molly Millars Lane, , Wokingham.
Proposed alterations to existing telecommunications equipment with 6 x dual-band, dual- polar antennas, 4 x microwave dish antennas up to 0.6m diameter each, 10 x equipment cabins and associated works.

I write to let you know that the above mentioned application has been recommended for APPROVAL: ☐ REFUSAL: ☐ under delegated powers.

If you have any questions please do not hesitate to contact **Elaine Vashi** on **(0118) 974 6451**. If you then feel the application needs to be transferred to the next available Development Control Committee for decision please fill in the form below.
This form must be received no later than _____

Yours faithfully

Principal Development Control Officer

LISTING FORM
Case officer: **Elaine Vashi** Application Number: **TL/2001/5563**
Clearcomm Solutions Ltd Cyber House, Molly Millars Lane, , Wokingham.
Proposed alterations to existing telecommunications equipment with 6 x dual-band, dual- polar antennas, 4 x microwave dish antennas up to 0.6m diameter each, 10 x equipment cabins and associated works.

Transfer: Yes ☐ No ☐
Reason for Transfer:

_____

_____

Signed: _____ Date: _____

Councillor King

NB. It would be helpful for speedy decision making if you could respond, even if you do not wish this application to be transferred.

WORK SHEET FOR : Elaine Vashi

Application Number : TL/2001/5563

Applicant : Orange P C S L C/OClive Illingworth.

Location : Clearcomm Solutions Ltd Cyber House, Molly Millars Lane, , Wokingham.

Proposal : *Proposed alterations to existing telecommunications equipment* with 6 x dual-band, dual- polar antennas, 4 x microwave dish antennas up to 0.6m diameter each, 10 x equipment cabins and associated works.

Site Notice Displayed ? : YES [ ] NO [ ] DATE [ ]

Date of Neighbour Notifications : .....

Date of Site Visit : .....

Date Registered : 21/12/2001

Earliest Date for Decision : 24/01/2002

Latest Consultation Date/Site Notice Expiry Date : 24/01/2002

This application will have expired on: 15/02/2002. You need to make a decision 1 day prior to this date for this application to count as determined in less than 8 weeks.

Consultation Responses :

Planning Issues :

Application Number: TL/2001/5563

Appraisal :

Recomendation : Approval: ☑ **Refusal:** ☐
(tick appropriate box)

MLT
TGW,

Application Number TL/2001/5563
Conditions/Reasons for Refusal

No	Std Con	Std Reas	Non Std Conditions / Reasons for Refusal

RECORD OF SITE VISIT

SITE ADDRESS: Clearcomm Solutions Ltd Cyber House Molly Millars Lane Wokingham.

APPLICATION NUMBER: TL/2001/5563

OFFICER: Elaine Vashi

DATE OF SITE VISIT:.....

1 SITE/STATUTORY NOTICE DISPLAYED ?

2. DESCRIPTION OF SURROUNDINGS

Molly Millars Lane

3. DESCRIPTION OF SITE/BUILDING

4. RELATIONSHIP TO ADJOINING PROPERTIES

5. SITE CONSTRAINTS

TREES

ACCESS/PARKING

LEVELS

BOUNDARY TREATMENT

OTHERS

Received by Wokingham District Council

Application No: TL/2001/5563

Proposal:
Proposed alterations to existing telecommunications equipment with 6 x dual-band, dual- polar antennas, 4 x microwave dish antennas up to 0.6m diameter each, 10 x equipment cabins and associated works.

Location:
Clearcomm Solutions Ltd Cyber House, Molly Millars Lane, , Wokingham.

The application is available for inspection at Wokingham District Council's offices during the following times:

PLANNING DEPARTMENT, SHUTE END, WOKINGHAM TEL (0118) 974 6428
8.30 - 5.00 Monday - Thursday & 8.30 - 4.00 Friday

WOODLEY LIBRARY HEADLEY ROAD WOODLEY 9.30am - 7.00pm Mon, Thurs & Fri. 9.30am - 5.00pm Tues, 9.30am - 1.00pm Saturday and 1.00pm - 4.00pm Sunday. Library closed all day Wednesday. If you intend to view this application at Woodley Library please allow 4 days from the date of this letter for delivery of plans and remember to quote application number TL/2001/5563 to enable the library staff to locate the correct information.

Comments should be sent in writing QUOTING THE APPLICATION NUMBER to the Case Officer Elaine Vashi P.O. Box 157 Council Offices, Shute End, Wokingham Berkshire, RG40 1WR to arrive on or before 24/01/2002. Written comments submitted will become available for public inspection.

In view of the very large number of planning applications and letters of comment received, it will not be possible for an individual reply to be issued to observations made. However any comments will be taken into account when the application is determined and you will be notified of the decision.

Head Planning and Transportation

31 December 2001

* * * COMMUNICATION RESULT REPORT (28.JAN.2002 15:00) * * *

TTI WDC PLAN&TRANSPORT

FILE	MODE	OPTION	ADDRESS (GROUP)	RESULT	PAGE
661	MEMORY TX		902089634101	OK	P. 2/2

REASON FOR ERROR
E-1) HANG UP OR LINE FAIL
E-2) BUSY
E-3) NO ANSWER
E-4) NO FACSIMILE CONNECTION

WOKINGHAM UNITARY
Aiming for Excellence

PLANNING SERVICES

Fax Cover Sheet

DATE: 28/1/02

TO: CLIVE ILLINGWORTH

FROM: ELAINE VASHI **Planning Services.**

NUMBER OF PAGES INCLUDING THIS HEADER SHEET: 2

RECIPIENT FAX NUMBER: 020 89634101.

OUR FAX NUMBER: (0118) 974 6484

SUBJECT: TELECOMMUNICATIONS APPLICATION AT CYBER HOUSE, MOLLY MILLARS LANE, WOKINGHAM

NOTES: REF. TL/2001/5563.

Tel: (0118) 974 6451 (Direct Line)
Fax: (0118) 974 6484
Date: 28 January, 2002
My ref: TL/2001/5563
Your ref: BRK0005/S12

Environmental Services Department
Planning Services
P.O. Box 157
Shute End, Wokingham
Berkshire RG40 1WR
Tel: (0118) 974 6000
Fax: (0118) 974 6484
Minicom No: (0118) 974 6991
DX: 33506 – Wokingham

Mr C Illingworth
Orange
Black Arrow House
2-3rd Floor
2 Chandros Road
London
NW10 6NF

Dear Mr Illingworth

RE: PROPOSED REPLACEMENT OF EXISTING TELECOMMUNICATIONS INSTALLATION WITH 6 NO., DUAL BAND, DUAL POLAR ANTENNAS, 4 NO. MICROWAVE DISH ANTENNAS, 10 EQUIPMENT CABINS AND ASSOCIATED SUPPORT STEELWORK AND FEEDER MANAGEMENT SYSTEMS, AT CYBER HOUSE, MOLLAR MILLARS LANE, WOKINGHAM.
APP.NO. TL/2001/5563

I refer to your notification for the proposed erection of the above mentioned telecommunications apparatus, at Cyber House, Mollar Millars Lane, Wokingham.

I write to formally advise you that the Local Planning Authority require Prior Approval of this scheme, in line with policy WIC14 of the Wokingham District Local Plan (Deposit Draft).

I hope this information is of use to you. Should you wish to discuss this matter you should contact Elaine Vashi on the above number.

Yours sincerely

M L THORP
Principal Development Control Officer

File:
CLEARCOMMTL.do
c

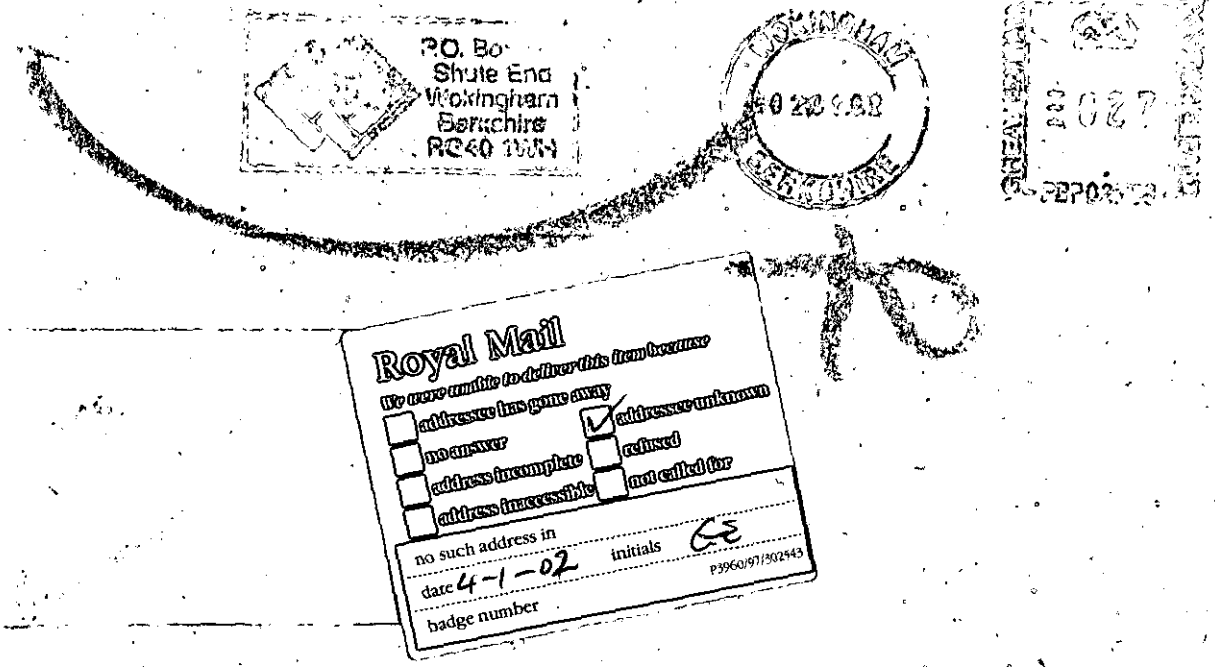
P.O. Box
Shute End
Wokingham
Berkshire
RG40 1WN
WOKINGHAM
BERKSHIRE
Royal Mail
We were unable to deliver this item because
addressee has gone away
addressee unknown
no answer
refused
address incomplete
not called for
address inaccessible
no such address in
date 4-1-02
initials
badge number
P3960/97/302543



Tel. (0118) 974 6451

Date: 31 December 2001

Your Ref:

My Ref: Elaine Vashi
TL/2001/5563

PLANNING SERVICES	HPT
PCL	TLS
DC	ENF
APP	
CS	
09 JAN 2002	
COPIES TO:	ACK:
	FILE:

WOKINGHAM UNITARY
Aiming for Excellence

Environmental Services Department
Planning Services
P.O. Box 157
Shute End, Wokingham
Berkshire RG40 1WR
Fax: (0118) 974 6484
Minicom No: (0118) 974 6991
DX: 33506 – Wokingham

The Owner / Occupier
22
THE BUSINESS CENTRE MOLLY MILLARS LANE
WOKINGHAM
BERKSHIRE
RG412QY

Dear Sir/Madam
Application Number: TL/2001/5563
Site Address: Clearcomm Solutions Ltd Cyber House, Molly Millars Lane, Wokingham.
Proposal: Proposed alterations to existing telecommunications equipment with 6 x dual-band, dual- polar antennas, 4 x microwave dish antennas up to 0.6m diameter each, 10 x equipment cabins and associated works..

The Council has received an application to carry out the above development.

If you wish to see the plans and other details submitted you can do so at the District Council Planning Services reception at the offices in Shute End, Wokingham from 8.30am to 5.00pm Monday to Thursday and 8.30am to 4.00 Friday, **or** at Woodley Library, Headley Road, Woodley from 9.30am to 7.00pm Monday, Thursday and Friday, 9.30am to 5.00pm Tuesdays, 9.30am to 1.00pm Saturdays and 1.00pm to 4.00pm Sundays. The library is closed all day on Wednesdays. **If you intend to view this application at Woodley Library please allow 4 working days from the date of this letter for delivery of plans and remember to take this letter with you or quote application number TL/2001/5563 to enable staff to locate the correct information.**

If you have any comments you would like to make before the application is determined, please reply in writing within 21 days from the date of this letter quoting Application Number **TL/2001/5563** . Your comments will be considered by the planning officer before a decision is made and will be summarised in the committee report if the application is decided by committee. Where an application is to go to committee you will be told of the date and given the opportunity to speak at the meeting. All those making comments will be notified of the decision when it is made. **You can also make comments using the District Councils web site at *www.wokingham.gov.uk* , under Planning.**

Please note that all comments made will be open to public inspection and should you have any queries regarding this application please contact the planning officer, **Elaine Vashi**, on **(0118) 974 6451**.

Yours faithfully,

Elaine Vashi

Development Control Officer


P.O. Box
Shute End
Wokingham
Berkshire
RG40 1WH


WOKINGHAM
20 JAN 02
BERKSHIRE


027
PB702798

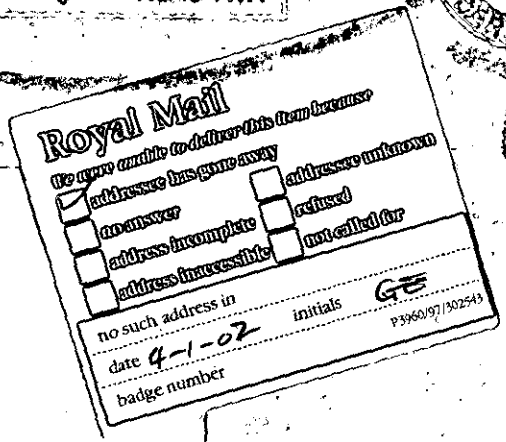
Royal Mail
the item enable to deliver this item because
addressee has gone away
addressee unknown
no answer
refused
address incomplete
not called for
address inaccessible
no such address in
initials GE
date 4-1-02
badge number
P3960/97/302543



Tel. (0118) 974 6451

Date: 31 December 2001

Your Ref:

My Ref: Elaine Vashi
TL/2001/5563

PLANNING SERVICES	HPT
POL	TLS
DC	ENF
APP	
CS	
0 9 JAN 2002	
COPIES TO:	ACK:
	FILE:

The Owner / Occupier
TRINITY COURT
ABBEY NATIONAL PLC
MOLLY MILLARS LANE
WOKINGHAM
BERKSHIRE
RG412PY

WOKINGHAM UNITARY
Aiming for Excellence

Environmental Services Department
Planning Services
P.O. Box 157
Shute End, Wokingham
Berkshire RG40 1WR
Fax: (0118) 974 6484
Minicom No: (0118) 974 6991
DX: 33506 – Wokingham

Dear Sir/Madam
Application Number: TL/2001/5563
Site Address: Clearcomm Solutions Ltd Cyber House, Molly Millars Lane, Wokingham.
Proposal: Proposed alterations to existing telecommunications equipment with 6 x dual-band, dual- polar antennas, 4 x microwave dish antennas up to 0.6m diameter each, 10 x equipment cabins and associated works..

The Council has received an application to carry out the above development.

If you wish to see the plans and other details submitted you can do so at the District Council Planning Services reception at the offices in Shute End, Wokingham from 8.30am to 5.00pm Monday to Thursday and 8.30am to 4.00 Friday, **or** at Woodley Library, Headley Road, Woodley from 9.30am to 7.00pm Monday, Thursday and Friday, 9.30am to 5.00pm Tuesdays, 9.30am to 1.00pm Saturdays and 1.00pm to 4.00pm Sundays. The library is closed all day on Wednesdays. **If you intend to view this application at Woodley Library please allow 4 working days from the date of this letter for delivery of plans and remember to take this letter with you or quote application number TL/2001/5563 to enable staff to locate the correct information.**

If you have any comments you would like to make before the application is determined, please reply in writing within 21 days from the date of this letter quoting Application Number **TL/2001/5563** . Your comments will be considered by the planning officer before a decision is made and will be summarised in the committee report if the application is decided by committee. Where an application is to go to committee you will be told of the date and given the opportunity to speak at the meeting. All those making comments will be notified of the decision when it is made. **You can also make comments using the District Councils web site at *www.wokingham.gov.uk* , under Planning.**

Please note that all comments made will be open to public inspection and should you have any queries regarding this application please contact the planning officer, **Elaine Vashi**, on **(0118) 974 6451**.

Yours faithfully,

Elaine Vashi

Development Control Officer

Elaine Vashi

From: John Mullaney
Sent: 09 January 2002 09:15
To: Elaine Vashi
Subject: TL/2001/5563 CLEARCOM SOLUTIONS, LTD CYBER HOUSE, MOLLY MILLARS LANE

I have no objections to this application.

John Mullaney
Senior Environmental Health Officer
Environmental Protection and Housing

Application Number : TL/2001/5563	Map No : ~~158~~ 83
Case Officer : EV	Site Area : 0·02
Valid Date : 21·12·01	Received Date: 21/12/2001

Level : Delegated Application

Description : Proposed alterations to existing telecommunications equipment with 6 x dual-band, dual- polar antennas, 4 x microwave dish antennas up to 0.6m diameter each, 10 x equipment cabins and associated works.

Location : Clearcomm Solutions Ltd Cyber House, Molly Millars Lane, , Wokingham.

Parish : WK Ward : EVE 31·12·01 TJ.

Applicant : Orange P C S L C/OClive Illingworth.

Fee Required: £190 Fee Received: £190 (9)

Additional: ..... or Refund: .....

Enforcement Section to be notified ☐ (tick if required)

Additional information required for validation;

REASON	NOTES	DATE REQ	DATE RECD
LOCATION PLANS			
BLOCK PLANS			
FORMS UNSIGNED			
S.66 MISSING/INCORRECT/ UNSIGNED			
ELEVATION PLANS			
FLOOR PLANS			
NO SCALE OR SCALE IS IMPERIAL			
ENCROACHMENT LETTER REQUIRED			
OTHER			

Is the site in a Conservation Area: ☐ Yes ☐ No If "Yes" which one _____

Is the site a Listed Building: ☐ Yes ☐ No

Is a Statutory Advertisement required: ☐ Yes ☐ No

INTERNAL CONSULTATIONS 31.12.01 B

Building Control

Heritage (Harold Sanders)

Landscape

Trees

Environmental Health ✓

Housing

Leisure & Cultural Services

Public Rights of Way Officer

Property ✓

Policy & Plans

Joint Strategic Planning Unit

Archaeological Officer (BABTIE)

Education

Social Services

Highways

EXTERNAL CONSULTATIONS

Adjacent DPA : _____

Adjacent Parish : _____

SEB

British Gas

Oil pipeline

Transco

Environment Agency

Railtrack

Police Arch Officer

HERITAGE BODIES

Victorian Society
The Georgian Group
Ancient Monuments Society
Council for British Arch
RCHME
NRPB (Telecommunications)
Sport England
Society for Proct' of Ancient Bldgs
English Heritage

OTHERS

.....

.....

.....

.....

.....

.....

NEIGHBOURS

See map

.....

.....

5563

21 DEC 2001

21.DEC.2001* 5563

Our Ref: BRK0005/S12

20 December 2001

Black Arrow House
2-3rd Floor
2 Chandos Road
London
NW10 6NF
Tel 020 8963 4100
Fax 020 8963 4101

Chief Planning Officer
Planning Department
Wokingham District Council
P.O. Box 157
Shute End
Wokingham
Berkshire
RG40 1WR

RECORDED DELIVERY

Dear Sir or Madam

Re: Application for Determination Under Part 24 of The General Permitted Development Order 1995 & The Town and Country Planning (General Permitted Development) (Amendment) Order 1998

Orange Personal Communications Services Limited is licensed under Section 7 of the Telecommunications Act 1984 to develop a Personal Communications Network (PCN), and is by virtue of its Licence a Code System Operator being entitled to carry out certain developments as set out above.

Proposed Alterations to Existing Orange PCS Ltd. Telecommunications Site at Cyber House, Molly Millars Lane, Wokingham, Berkshire, RG11 2PX:

- **6 N° Dual-Band, Dual-Polar Antennas**
- **4 N° Microwave Dish Antennas of up to 0.6m diameter each**
- **2 No Equipment Cabins each measuring 1600mm H x 770mm W x 789mm D**
- **8 No Equipment Cabins each measuring 2075mm H x 770mm W x 645mm D**
- **Associated support steelwork and feeder management systems**

Please find enclosed, for your information, the following drawings detailing this alteration: **30/BRK0005/101 issue 0, 102A, 103A, 104A, 105 – 109 issue 0.**

Orange is by virtue of its licence a Code System Operator and is therefore entitled to carry out certain developments under part 24 of the Town and Country Planning General Permitted Development Order 1995 & The Town and Country Planning (General Permitted Development) (Amendment) Order 1998. Therefore as required by condition A.2 (4) of part 24, **we hereby apply** for a determination as to whether prior approval will be required to the siting and appearance of the above equipment.

If you have any comments or concerns regarding this application I would be obliged if you would contact me as soon as possible, quoting the site reference above.

We enclose a cheque for £190.00 and would appreciate you acknowledging receipt of this application and cheque.

Yours faithfully

Clive Illingworth
Estates Controller

Direct Tel: 020 8963 4185

Enc.

Orange Personal Communications Services Limited
Registered Office:
St. James Court Great Park Road
Almondsbury Park Bradley Stoke
Bristol BS32 4QJ

Registered No:
2178917 England

1 ADDRESS RADYNE HOUSE MOLLY MILLARS LANE PARISH WOKINGHAM
ESSENTIAL
PLOT No. RESEARCH BUILDING FOR RADYNE ORD. SHEET No.
BUILDER

Plan No.	Applicant	Description of Development	Date of Decision	Decision
TP65 2793		ASSEMBLY SHOP/OFFICES	CONS. 14.7.49	APP
TP1382 4308		2ND STAGE	29.8.57	APP
F/19/64 6035		3/ST. RESEARCH H.QS /OFFICES	29.10.64	C/A
F/10/65 6573		4/S TO " "	25.2.65	APP
06042		GR. FLOOR RESEARCH TO OFFICES	14.6.77	C/A
97/66511/F	Munster Square Ltd.	Alts & Refurb of office build + car parking & access	20.2.98	C/A.
98/67450/IV	" "	Relaxation of Cond. 07 - App. 97/66511/F. Cont. Use of Spare for Parking	2.6.98	C/A.
FP98/1453	Munster Squ. Ltd.	refurb + conv. g. fl to c.park + new access	1.6.98	REF.
FP98/7647	Orange Communications	Inst. Tel. cabin + stub mast to roof + access staircase	21.7.98	C/A

SPECIAL ORDERS

1933
2 ESSENTIAL
ADDRESS RADYNE HOUSE MOLLY MILLARS LANE PARISH WOKINGSHAM
PLOT No RESEARCH BUILDING FOR RADYNE ORD. SHEET No.
BUILDER

Plan No.	Applicant	Description of Development	Date of Decision	Decision
98/67775/F	IONICA LTD	Antennae, Microwave dishes + Equipment Cabin	14.7.98	C/A
99/70190/A		Erect replacement entrance gates	23.9.99	C/A

MINISTRY DECISION
SPECIAL ORDERS

(1) ADDRESS TRINITY COURT PARISH WOKINGHAM

PLOT No. MOLLY MILLARS LANE ORD. SHEET No.

BUILDER X CANTEEN SITE FOR RADYNE

Plan No.	Applicant	Description of Development	Date of Decision	Decision
TP 65 2793		ASSEMBLY & PROTOTYPES/ CANTEEN	14.7.69	APP
TP 1274 4470		CARPARK	13.12.76	C/A
TP 1391 4318		WORKS CANTEEN	10.10.77	APP
06891		CANTEEN TO OFFICES	29.9.77	C/A
08107		"	13.4.78	C/A
29135	RADYNE	OLD PART BLOCK/NEW WALL	27.11.87	C/A
29672	TRINITY ESTATES	B1 BLOCK - OFFICE/KITCHEN/ L.IND	15.2.88	C/A C/A
31244	"	SIGNS	9.9.88	C/A
32991/2	"	FLAGPOLE - DSION	11.5.89	C/A
BRA 5339	"	2 1ST. BLOCK.	5.6.89	APP
BRA 8084	APRICOT	PARTITIONS	31.10.89	APP
BRA 10627	ABBEY NATIONAL	FITTING OUT/NEW PLANT ROOM	5.11.91	APP

DATE OF COMPLETION

MINISTRY DECISION

SPECIAL ORDERS TP 1005 LETTER AGREEING IN PRINCIPLE

DRAINAGE

091074

1933

(2) TRINITY COURT

ADDRESS MOLLY MILLARS LANE PARISH WOKINGHAM

PLOT No. ORD. SHEET No.

BUILDER

Plan No.	Applicant	Description of Development	Date of Decision	Decision
FP95/3408	NATIONAL GRID CO. plc.	OFFICE AREAS ETC USING PARTITIONS AROUND FLOOR	21.4.95	APP
FP95/3479	"	"	21.4.95	APP
96/6406/F	ABBEY NATIONAL (1ST FLOOR)	SATELLITE DISH	98.96	C/A
96/6443/F	HILL SAMUEL ASSET MANAGEMENT	15 ADD. CAR SPACES	24.6.97	C/A
A199/0193	First Leisure Corporation	fit-out offices 1st Floor	28.9.99	APP
A199/0195	SICBX c/o XEROX	Office refurbishment	5.10.99	APP
A/2000/0391	First Leisure Corp.	Int. illuminated fascia sign	29.03.00	C/A
A/2000/0507	Sulzer Infra CBX Ltd	" " " free standing sign	14/04/00	C/A

MINISTRY DECISION

SPECIAL ORDERS

21.DEC.2001 * 5563

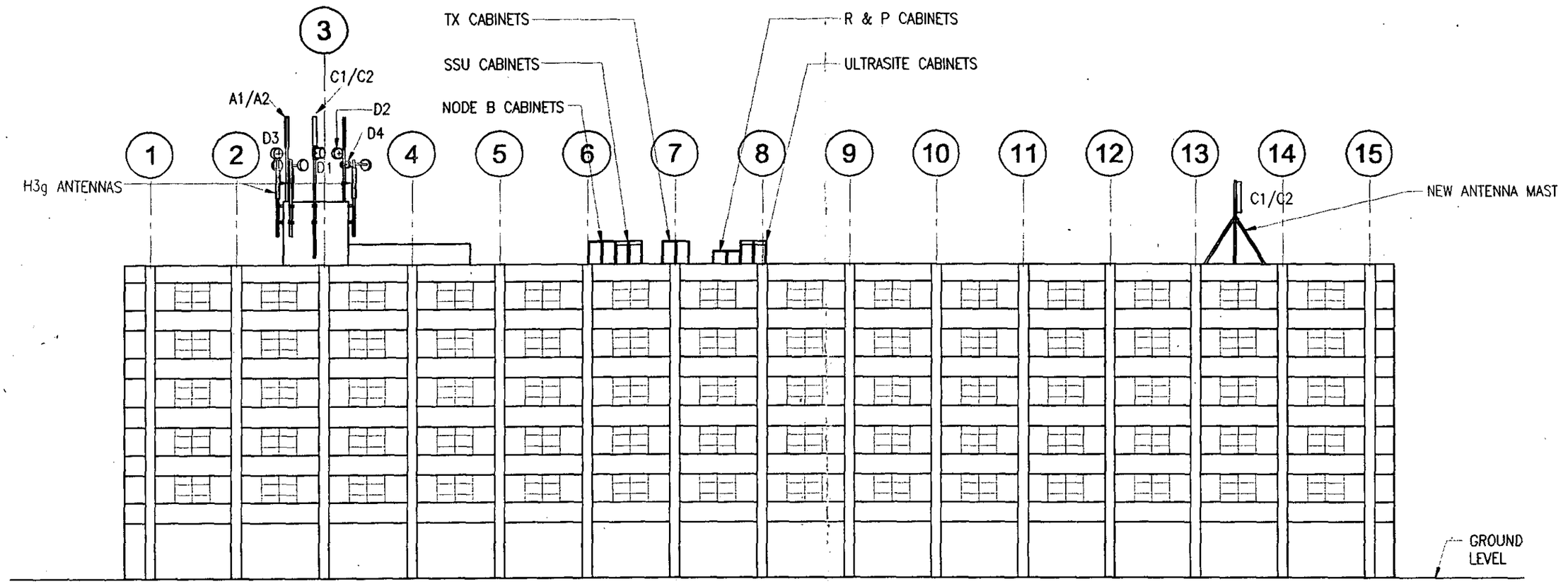

SOUTH ELEVATION

SCALE: 1:250

0 10 20 30 40 50 60 70 80 90 100

0 2 3

UPGRADE No TBA

WS Atkins Consultants Limited ©

Consulting Engineers,
Woodcote Grove,
Ashley Road,
Epsom, Surrey, England,
KT18 5BW

Fax (01372) 740055
Tel. (01372) 726140

THIS DRAWING CONTAINS INFORMATION DERIVED FROM THE MAST DESIGN DATA PROVIDED BY MASTS, TOWERS AND ANTENNAS Ltd AND JOHN ALLEN ASSOCIATES

A3 ORIGINAL

INCHES 0 1 2

0 10 20 30 40 50

MILLIMETRES

ISS.	DESCRIPTION	BY	DATE
A	EQUIPMENT CABS RELOCATED CL 6-8	FS	11.01
0	PLANNING ISSUE	TCRB	10.01

SCALE	DRAWN	CHECKED	APPROVED
AS SHOWN	T.C.R.B		
	DATE 23.10.01	DATE	DATE

TITLE
PROPOSED
RADIO INSTALLATION FOR
CYBER HOUSE. MOLLY MILLARS LANE
WOKINGHAM, BERKSHIRE

DRAWING NUMBER 30/BRK0005/D5C/104

ISSUE A

orange

St. James Court
Great Park Road
Almondsbury
Bristol
BS12 4QJ
Tel 01454 624600
Fax 01454 618501

WSA Project No. A86391

BRK0005

21 DEC.2001 • 5563

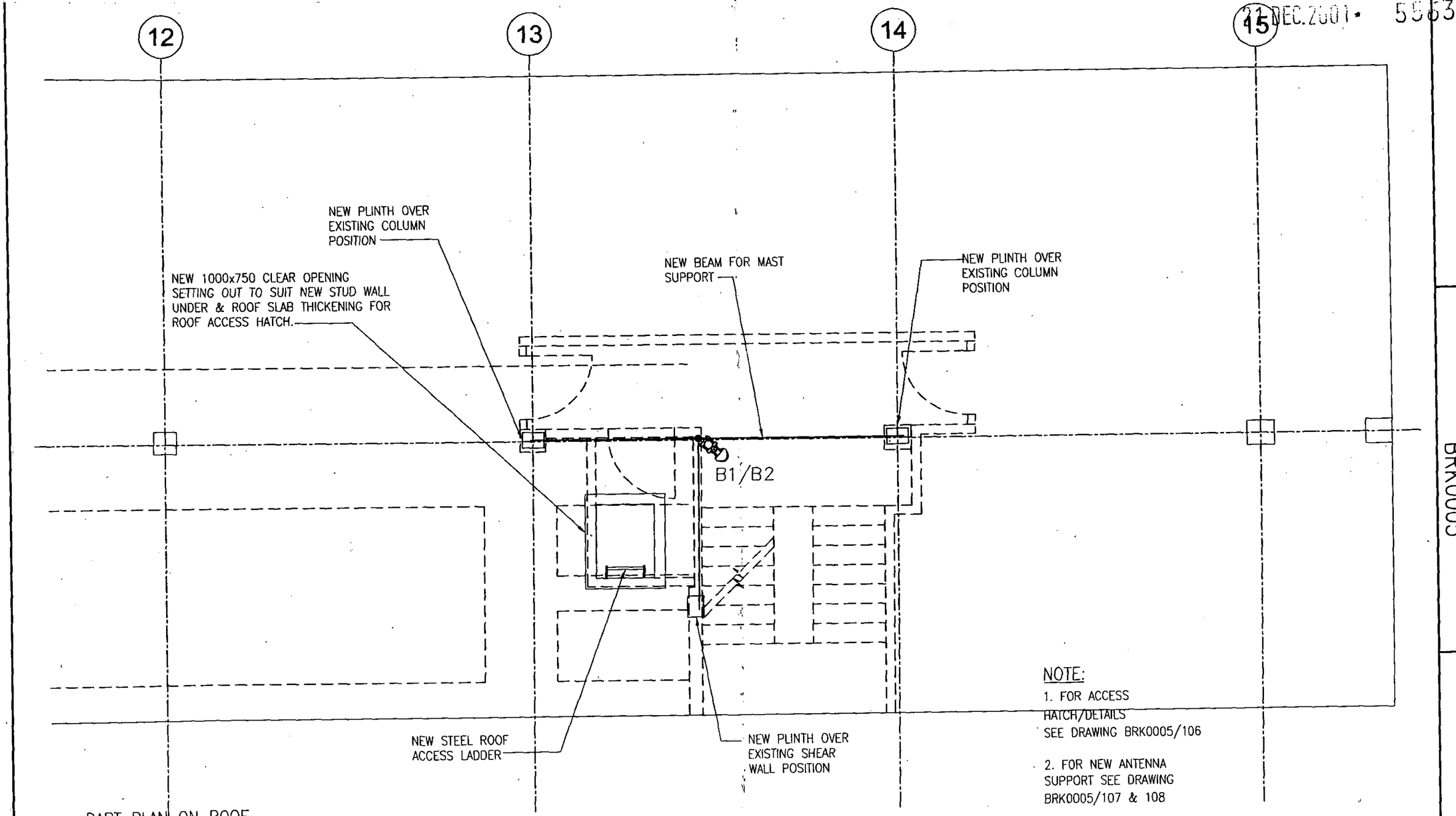

PART PLAN ON ROOF

SCALE: 1:50

NOTE:

1. FOR ACCESS HATCH/DETAILS SEE DRAWING BRK0005/106

2. FOR NEW ANTENNA SUPPORT SEE DRAWING BRK0005/107 & 108

SITE NUMBER BRK0005

UPGRADE No TBA

WS Atkins Consultants Limited ©
Consulting Engineers,
Woodcote Grove,
Ashley Road,
Epsom, Surrey, England, KT18 5BW
Fax (01372) 740055
Tel. (01372) 726140

THIS DRAWING CONTAINS INFORMATION DERIVED FROM THE MAST DESIGN DATA PROVIDED BY MASTS, TOWERS AND ANTENNAS Ltd AND JOHN ALLEN ASSOCIATES

A3 ORIGINAL

INCHES 0 1 2

0 10 20 30 40 50 MILLIMETRES

ISS.	DESCRIPTION	BY	DATE
0	PLANNING ISSUE	TCRB	10.01

SCALE	DRAWN	CHECKED	APPROVED
AS SHOWN	T.C.R.B		
	DATE 23.10.01	DATE	DATE

TITLE
PROPOSED RADIO INSTALLATION FOR CYBER HOUSE. MOLLY MILLARS LANE WOKINGHAM,BERKSHIRE

DRAWING NUMBER 30/BRK0005/D5C/105

ISSUE 0

orange

hutchison telecom

St. James Court
Great Park Road
Almondsbury
Bristol
BS12 4QJ
Tel 01454 624600
Fax 01454 618501

WSA Project No. A86391

21.DEC.2001 5563

SITE NUMBER BRK0005

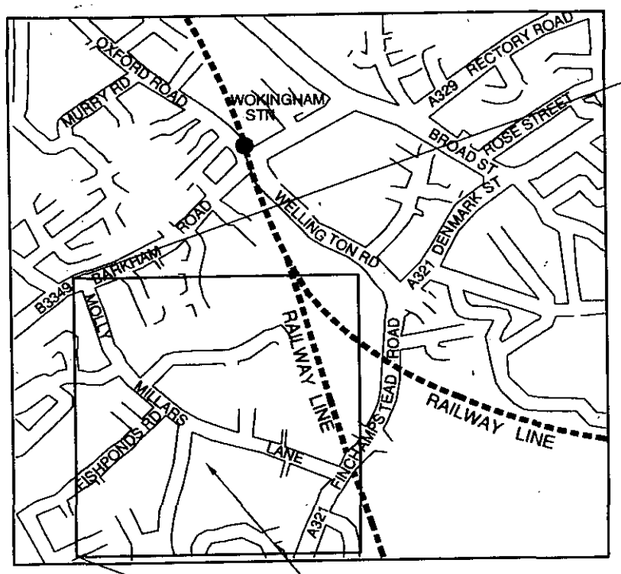

OPCSL SITE :
AT MOLLY MILLARS LANE
WOKINGHAM

N

SITE LOCATION
NOT TO SCALE

NGR – EASTING 48050, NORTHING 016785

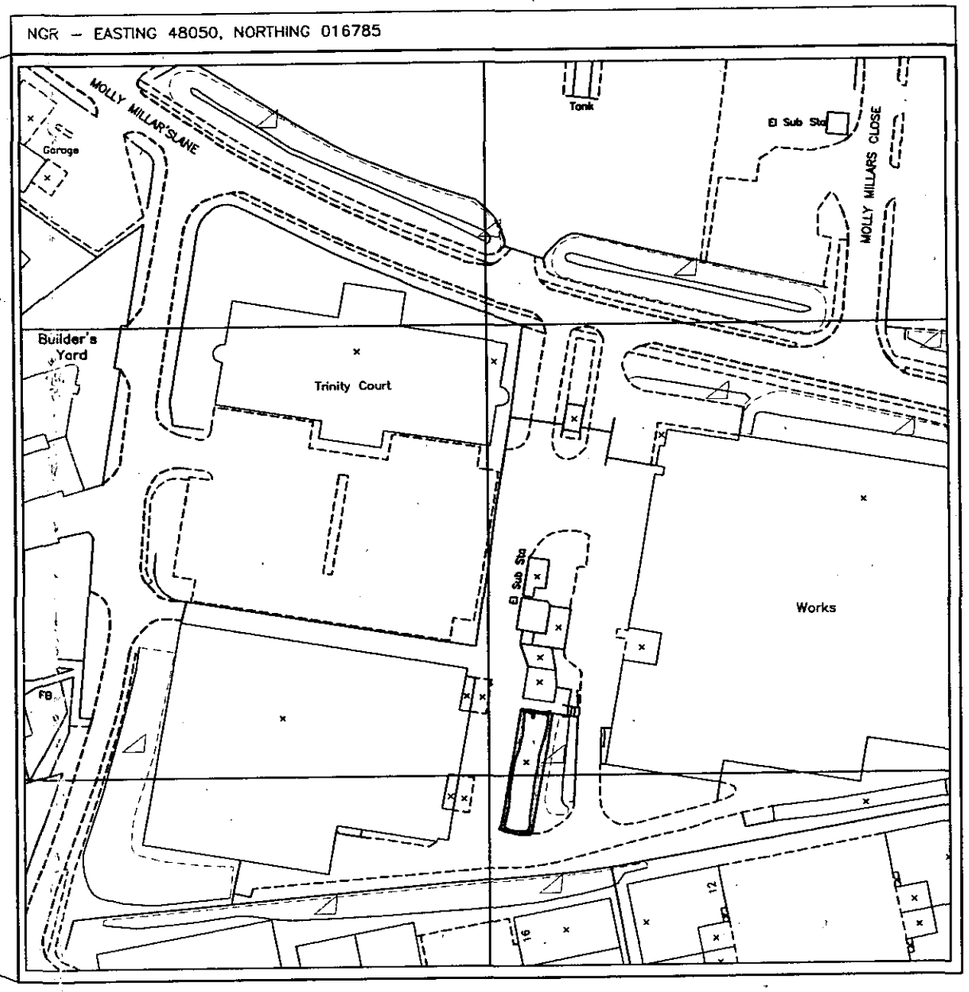

N

ORDNANCE SURVEY
SCALE 1:1250

0 10 20 30 40 50 60 70 80 90 100
1 2 3

UPGRADE No TBA

WS Atkins Consultants Limited ©
Consulting Engineers,
Woodcote Grove,
Ashley Road,
Epsom, Surrey, England,
KT18 5BW
Fax (01372) 740055
Tel. (01372) 726140

THIS DRAWING CONTAINS INFORMATION DERIVED FROM THE MAST DESIGN DATA PROVIDED BY MASTS, TOWERS AND ANTENNAS Ltd AND JOHN ALLEN ASSOCIATES

A3 ORIGINAL
INCHES 0 1 2
0 10 20 30 40 50
MILLIMETRES

ISS.	DESCRIPTION	BY	DATE
0	PLANNING ISSUE	TCRB	10.01

SCALE	DRAWN	CHECKED	APPROVED
AS SHOWN	TCRB		
DATE	2/10/01	DATE	DATE

TITLE
PROPOSED
RADIO INSTALLATION FOR
CYBER HOUSE, MOLLY MILLARS LANE,
WOKINGHAM, BERKSHIRE.

DRAWING NUMBER 30/BRK0005/101

ISSUE 0

orange
hutchison telecom

St. James Court
Great Park Road
Almondsbury
Bristol
BS12 4QJ
Tel 01454 624600
Fax 01454 618501

WSA Project No. A86391

21.DEC.2001* 5863

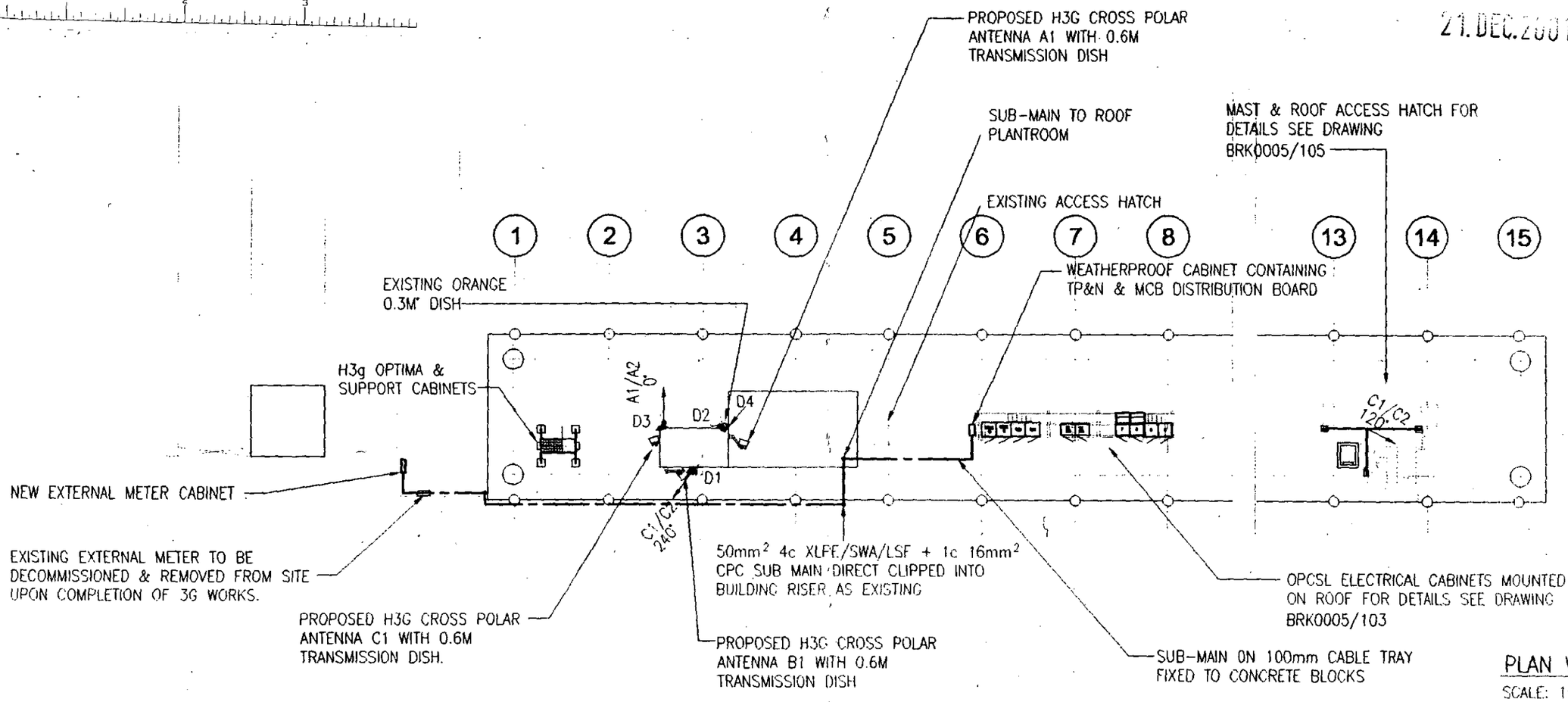

PLAN VIEW OF ROOF

SCALE: 1:250

NOTE: INFORMATION HELD ON IMS TAKES PRECEDENCE OVER ALL KEYS AND SCHEDULES SHOWN

OPCSL ANTENNA KEY

ITEM	ANTENNA REFERENCE	FUNCTION/ LINK NO.	SECTOR	TYPE / SIZE	BEARING	HEIGHT TO TOP OF ANTENNA FROM G/L	HEIGHT TO CENTRE OF DISH FROM G/L	REMOTE RFU Y/N
1	A1/A2	TX/RX	A	120 SECTOR	0° EGN	27150mm		
2	B1/B2	TX/RX	B	120 SECTOR	120° EGN	27150mm		
3	C1/C2	TX/RX	C	120 SECTOR	240° EGN	27150mm		
ITEM	DISH REFERENCE							
4	D1	-	-	600mmø	134.2° EGN		25000mm	N
5	D2	-	-	300mmø	40.24° EGN		25000mm	N
6	D3	-	-	600mmø	TBA		25000mm	
7	D4	-	-	600mmø	TBA		25000mm	

ELECTRICITY REQUIREMENTS

REC	100A TP&N IN NEW EXTERNAL METER CABINET

EQUIPMENT SCHEDULE

No	TYPE	SIZE	OTHER INFORMATION
1+1	G & H	770 x 645 x 1200mm	TO BE REMOVED
1	TX	770 x 645 x 2075mm	TO BE REMOVED
1	3 SECTOR 10 PACK	SIZE	PROPOSED

FEEDER CABLES

MAXIMUM FEEDER LENGTH	TYP/SIZE	MAXIMUM BEND RADIUS
50ø	ANDREWS LDF5 - 50 x 12	250mm

UPGRADE No TBA

WS Atkins Consultants Limited ©
Consulting Engineers,
Woodcote Grove,
Ashley Road,
Epsom, Surrey, England,
KT18 5BW
Fax (01372) 740055
Tel. (01372) 726140

THIS DRAWING CONTAINS INFORMATION DERIVED FROM THE MAST DESIGN DATA PROVIDED BY MASTS, TOWERS AND ANTENNAS Ltd AND JOHN ALLEN ASSOCIATES

A3 ORIGINAL

INCHES 0 1 2

0 10 20 30 40 50 MILLIMETRES

ISS.	DESCRIPTION	BY	DATE
A	EQUIPMENT CABS RELOCATED CL 6-8	TCRB	10.01
0	PLANNING ISSUE		

SCALE	DRAWN	CHECKED	APPROVED
AS SHOWN	T.C.R.B		
	DATE 19.10.01	DATE	DATE

TITLE
PROPOSED
RADIO INSTALLATION FOR
CYBER HOUSE. MOLLY MILLARS LANE
WOKINGHAM,BERKSHIRE

DRAWING NUMBER 30/BRK0005/D5C/102

ISSUE A

orange
St. James Court
Great Park Road
Almondsbury
Bristol
BS12 4QJ
Tel 01454 628600
Fax 01454 618501

WSA Project No. A86391

SITE NUMBER BRK0005

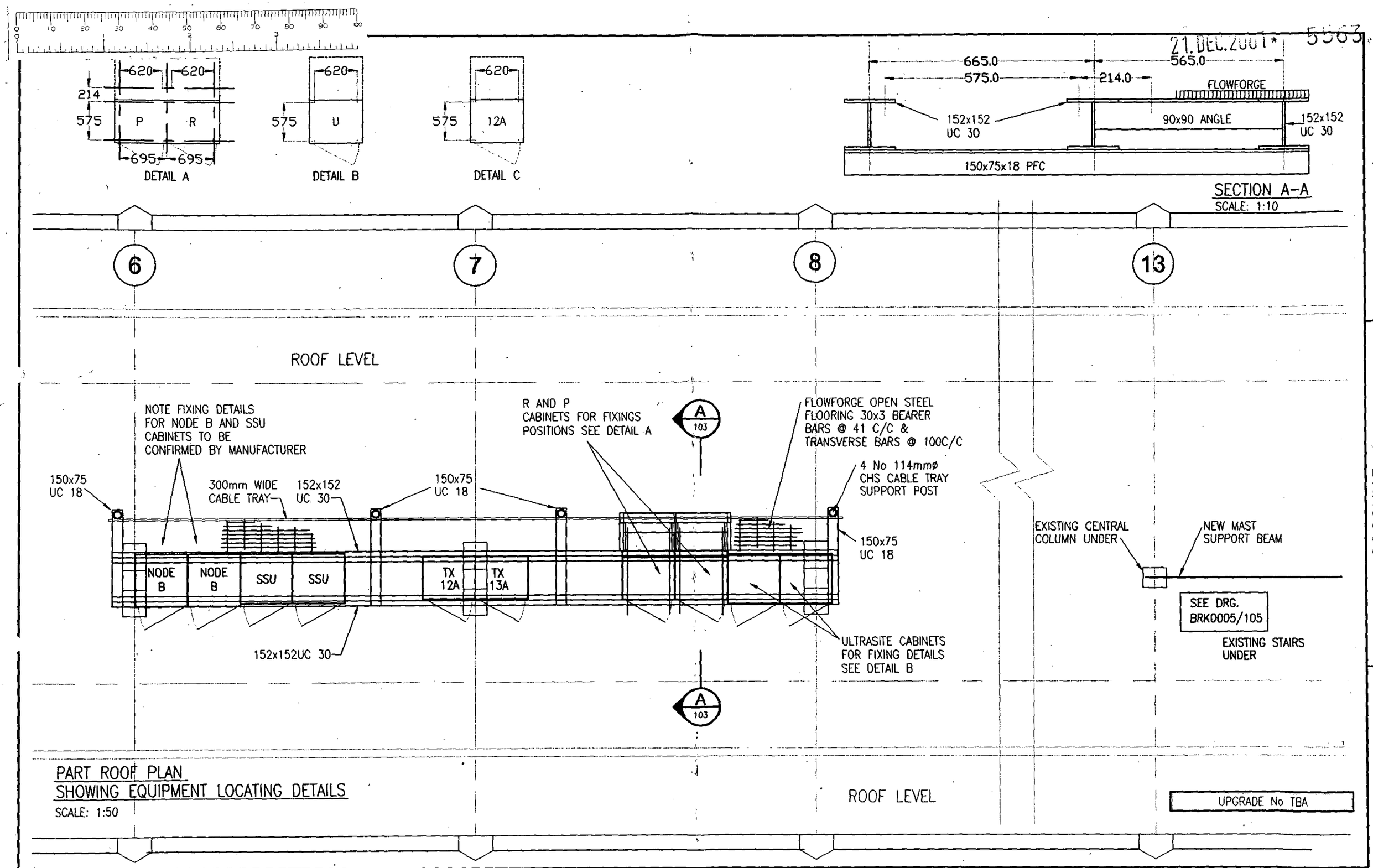

PART ROOF PLAN
SHOWING EQUIPMENT LOCATING DETAILS
SCALE: 1:50

BRK0005

WS Atkins Consultants Limited ©
Consulting Engineers,
Woodcote Grove,
Ashley Road,
Epsom, Surrey, England,
KT18 5BW
Fax (01372) 740055
Tel. (01372) 726140

THIS DRAWING CONTAINS INFORMATION DERIVED FROM THE MAST DESIGN DATA PROVIDED BY MASTS, TOWERS AND ANTENNAS Ltd AND JOHN ALLEN ASSOCIATES

A3 ORIGINAL
INCHES
0 1 2
0 10 20 30 40 50
MILLIMETRES

ISS.	DESCRIPTION	BY	DATE
A	EQUIPMENT CABS RELOCATED CL 6-8		
0	PLANNING ISSUE	TCRB	10.01

SCALE: AS SHOWN | DRAWN: T.C.R.B | DATE: 03.10.01 | CHECKED | DATE | APPROVED | DATE

TITLE: PROPOSED RADIO INSTALLATION FOR CYBER HOUSE. MOLLY MILLARS LANE WOKINGHAM,BERKSHIRE

DRAWING NUMBER: 30/BRK0005/D5C/103 | ISSUE: A

orange

St. James Court
Great Park Road
Almondsbury
Bristol
BS12 4QJ
Tel 01454 624600
Fax 01454 618501

WSA Project No. A86391

21.DEC.2001 5563

NOTE:

CONCRETE MIN. CRUSHING STRENGTH
30 N/mm^2 CONCRETE COVER TO
REINFORCEMENT 50mm

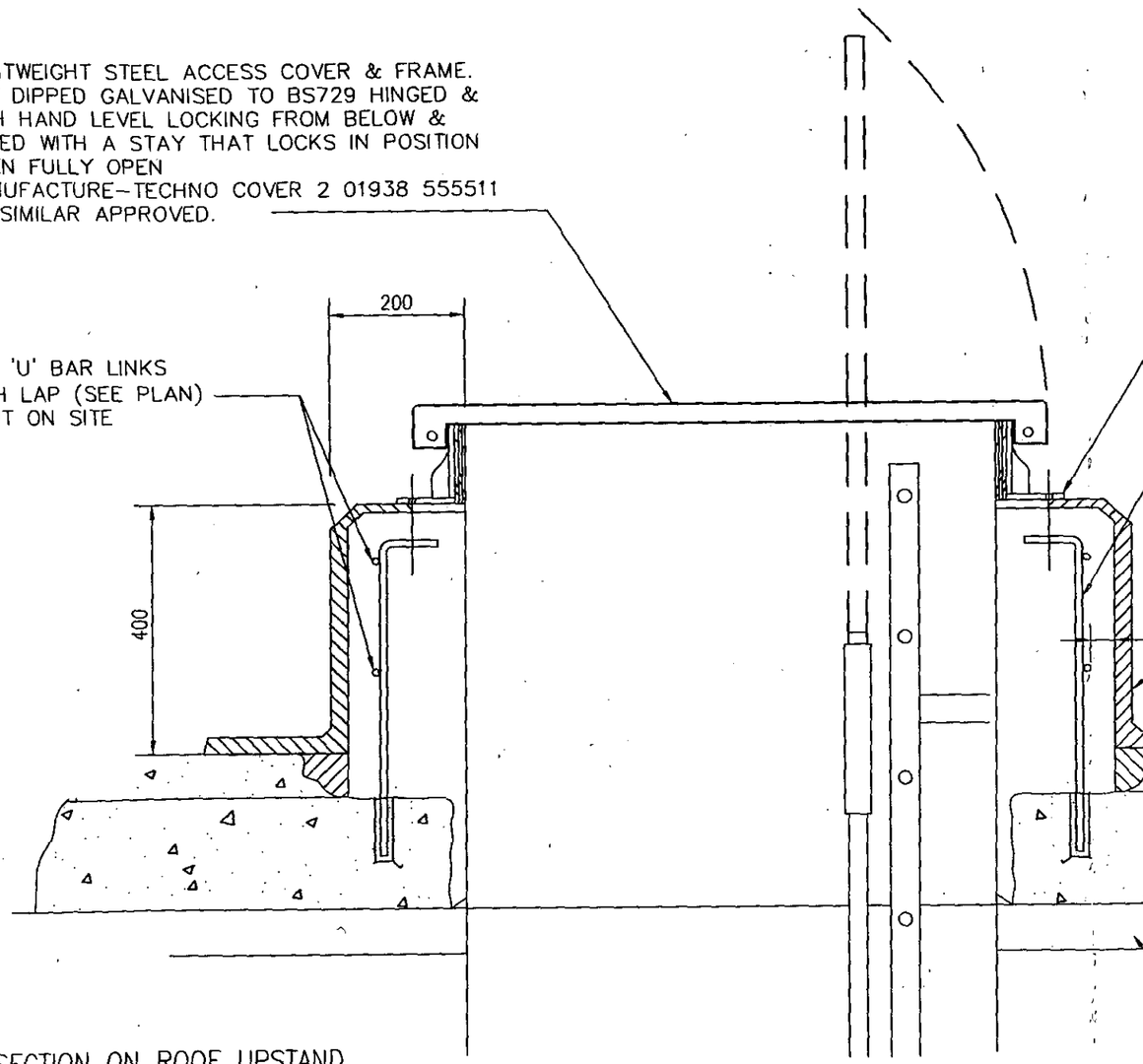

SECTION ON ROOF UPSTAND

SCALE: 1:10

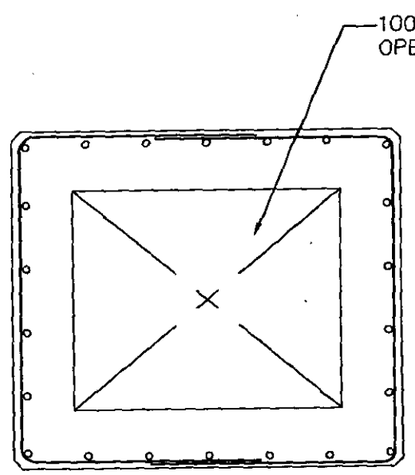

PLAN ON UPSTAND

SCALE: 1:20

FOR LOCATION OF UPSTAND SEE DRAWING BRK0005/105

SITE NUMBER BRK0005

UPGRADE No TBA

WS Atkins Consultants Limited ©
Consulting Engineers,
Woodcote Grove,
Ashley Road,
Epsom, Surrey, England, Fax (01372) 740055
KT18 5BW Tel. (01372) 726140

THIS DRAWING CONTAINS INFORMATION DERIVED FROM THE MAST DESIGN DATA PROVIDED BY MASTS, TOWERS AND ANTENNAS Ltd AND JOHN ALLEN ASSOCIATES

A3 ORIGINAL

INCHES 0 1 2

0 10 20 30 40 50

MILLIMETRES

ISS.	DESCRIPTION	BY	DATE
0	PLANNING ISSUE	TCRB	10.01

SCALE	DRAWN	CHECKED	APPROVED
AS SHOWN	T.C.R.B.		
	DATE 23.10.01	DATE	DATE

TITLE
PROPOSED
RADIO INSTALLATION FOR
CYBER HOUSE, MOLLY MILLARS LANE
WOKINGHAM,BERKSHIRE

DRAWING NUMBER 30/BRK0005/D5C/106

ISSUE 0

orange

hutchison telecom

St. James Court
Great Park Road
Almondsbury
Bristol
BS12 4QJ
Tel 01454 624600
Fax 01454 618501

WSA Project No. A86391

21.DEC.2001 5583

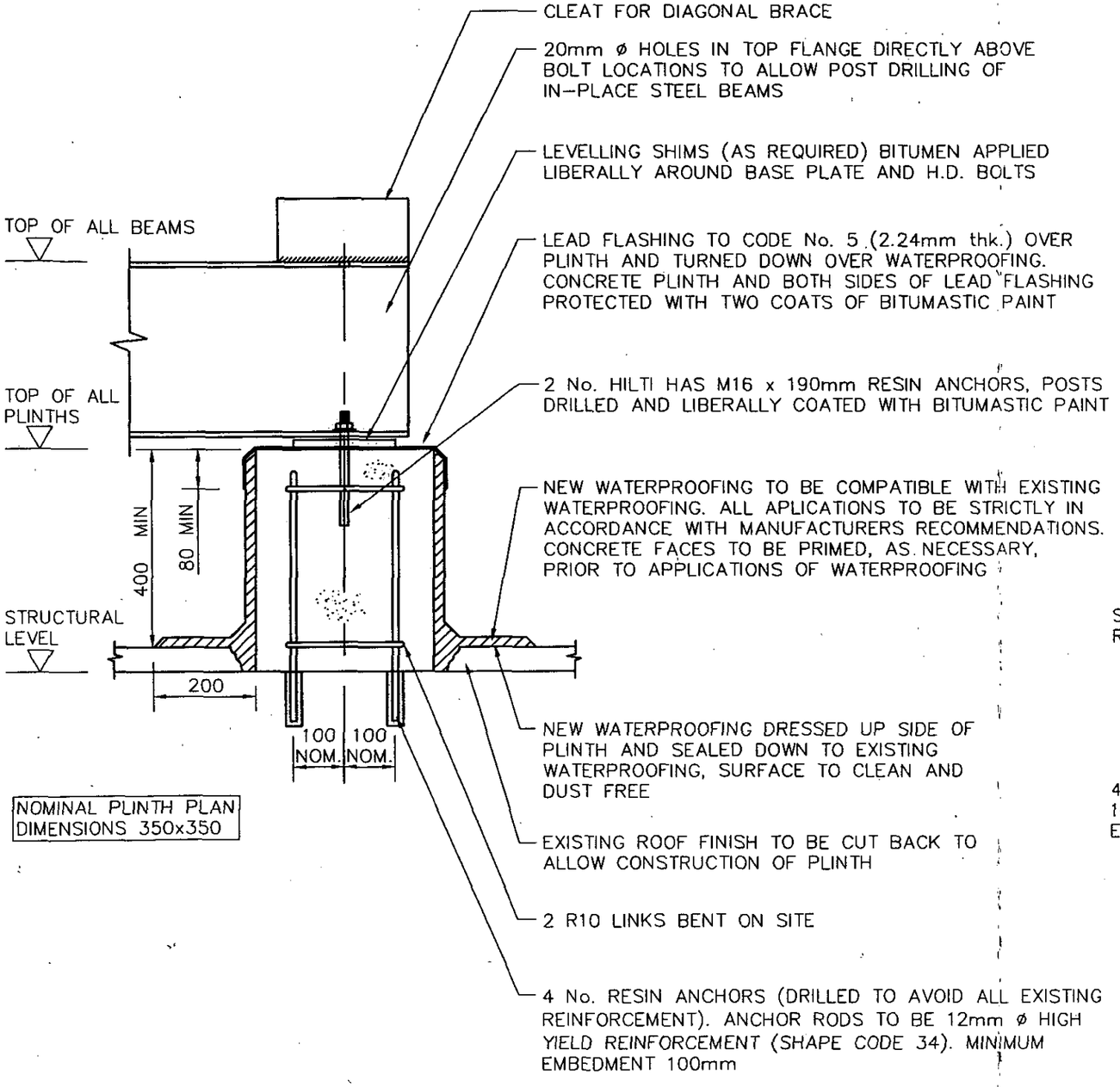

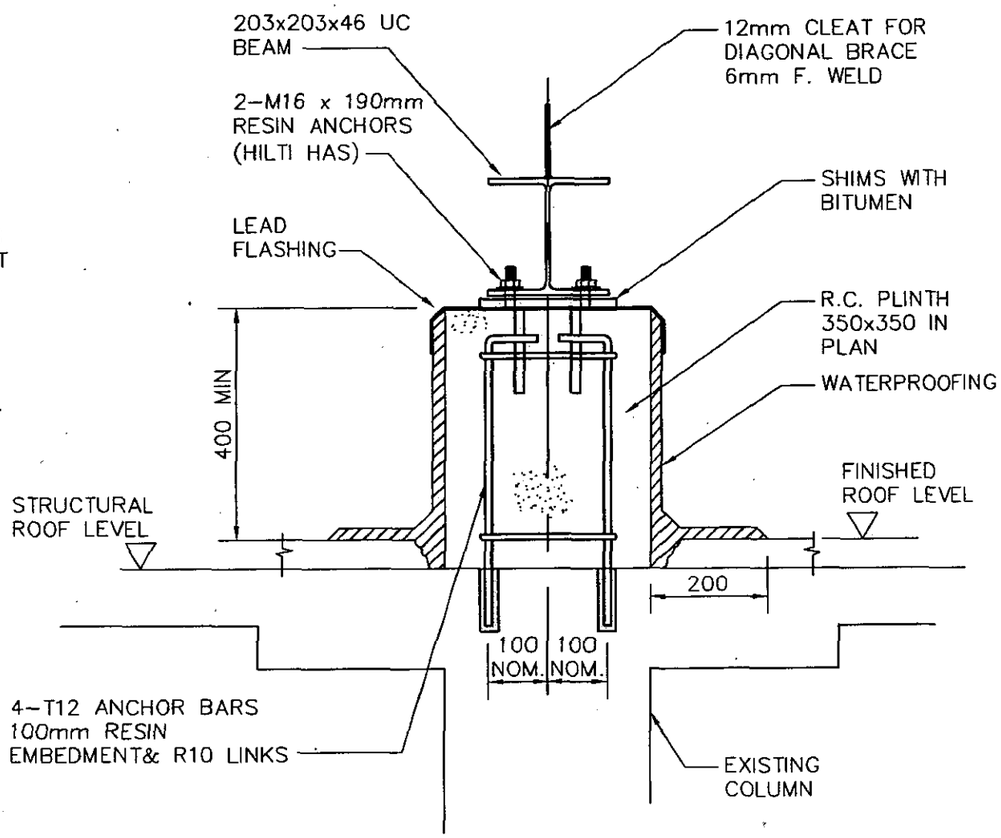

FOR STEELWORK LOCATION SEE DRG./105

SITE NUMBER BRK0005

SECTIONS THROUGH TYPICAL STEELWORK FIXING POINT

SCALE 1:10

UPGRADE No TBA

WS Atkins Consultants Limited ©
Consulting Engineers,
Woodcote Grove,
Ashley Road,
Epsom, Surrey, England,
KT18 5BW
Fax (01372) 740055
Tel. (01372) 726140

THIS DRAWING CONTAINS INFORMATION DERIVED FROM THE MAST DESIGN DATA PROVIDED BY MASTS, TOWERS AND ANTENNAS Ltd AND JOHN ALLEN ASSOCIATES

A3 ORIGINAL

ISS.	DESCRIPTION	BY	DATE
0	PLANNING ISSUE	TCRB	10.01

SCALE	DRAWN	CHECKED	APPROVED
AS SHOWN	T.C.R.B		
	DATE 23.10.01	DATE	DATE

TITLE
PROPOSED
RADIO INSTALLATION FOR
CYBER HOUSE. MOLLY MILLARS LANE
WOKINGHAM,BERKSHIRE

DRAWING NUMBER 30/BRK0005/D5C/107

ISSUE 0

orange

hutchison 3G uk ltd

St. James Court
Great Park Road
Almondsbury
Bristol
BS12 4QJ
Tel 01454 624600
Fax 01454 618501

WSA Project No. A86391

21.DEC.2001 5563

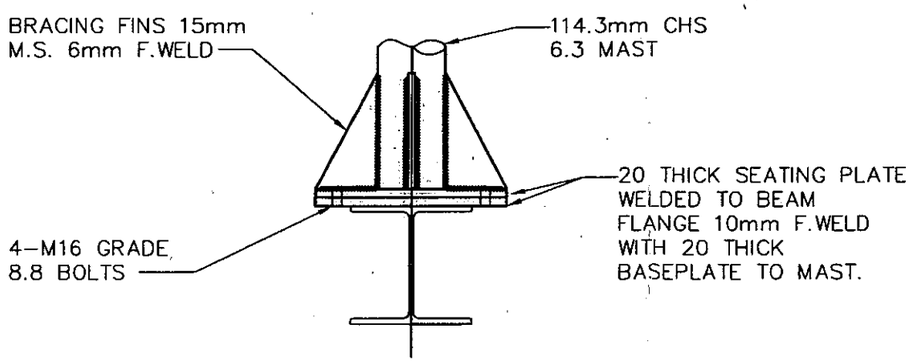

MAST BASE DETAIL

SCALE 1:10

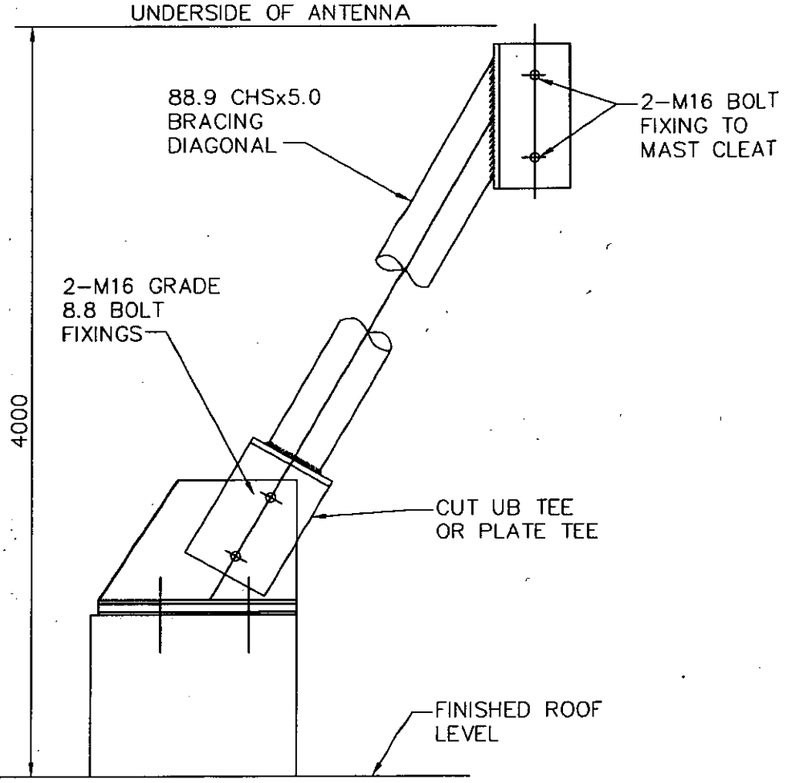

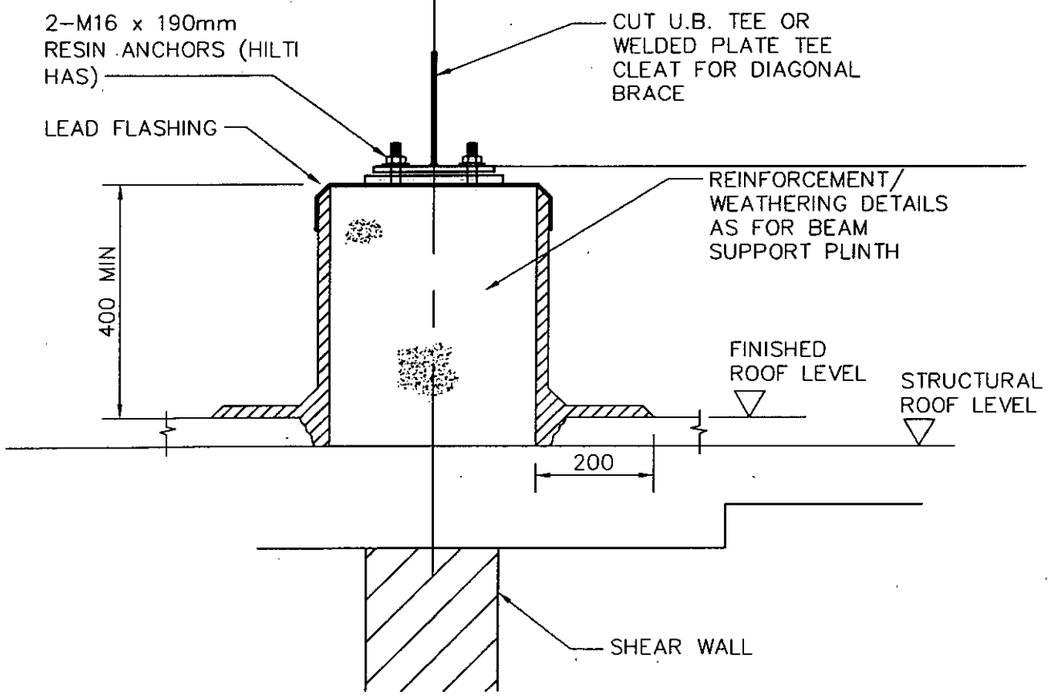

PLINTH DETAIL AT SHEAR WALL FOR DIAGONAL BRACE

SCALE 1:10

SITE NUMBER - BRK0005

UPGRADE No TBA

WS Atkins Consultants Limited ©
Consulting Engineers,
Woodcote Grove,
Ashley Road,
Epsom, Surrey, England,
KT18 5BW
Fax (01372) 740055
Tel. (01372) 726140

THIS DRAWING CONTAINS INFORMATION DERIVED FROM THE MAST DESIGN DATA PROVIDED BY MASTS, TOWERS AND ANTENNAS Ltd AND JOHN ALLEN ASSOCIATES

A3 ORIGINAL

INCHES 0 1 2

MILLIMETRES 0 10 20 30 40 50

ISS.	DESCRIPTION	BY	DATE
0	PLANNING ISSUE	TCRB	10.01

SCALE	DRAWN	CHECKED	APPROVED
AS SHOWN	T.C.R.B		
	DATE 23.10.01	DATE	DATE

TITLE
PROPOSED
RADIO INSTALLATION FOR
CYBER HOUSE. MOLLY MILLARS LANE
WOKINGHAM, BERKSHIRE

DRAWING NUMBER 30/BRK0005/D5C/108

ISSUE 0

orange

St. James Court
Great Park Road
Almondsbury
Bristol
BS12 4QJ
Tel 01454 624600
Fax 01454 618501

WSA Project No. A86391

21.DEC.2001 5563

NOTES

1.1. DO NOT SCALE.

1.2. ALL DIMENSIONS ARE IN MM UNLESS OTHERWISE SPECIFIED.

1.3. THIS DRAWING TO BE READ IN CONJUNCTION WITH ALL OTHER RELEVANT DRAWINGS.

1.4. ASSUME ALL SITE DETAILS ARE EXISTING UNLESS OTHERWISE SPECIFIED.

GENERAL

2.1. ALL DIMENSIONS SHOWN ON THIS DRAWING TO EXISTING STRUCTURES ARE APPROXIMATE AND THE CONTRACTOR IS TO OBTAIN ALL EXACT SITE DIMENSIONS NECESSARY TO CARRY OUT THE WORKS.

2.2. ALL SPECIALIST ITEMS TO BE USED IN ACCORDANCE WITH THE MANUFACTURERS RECOMMENDATIONS.

2.3. TEMPORARY PROTECTION SHALL BE PROVIDED TO PREVENT WATER PENETRATION INTO EXISTING BUILDINGS DURING THE WORKS.

2.4. THE CONTRACTOR IS ENTIRELY RESPONSIBLE FOR MAINTAINING THE STABILITY OF ALL EXISTING BUILDINGS AND STRUCTURES WITHIN AND ADJACENT TO THE WORKS AND OF ALL WORKS, FROM THE DATE OF POSSESSION OF THE SITE UNTIL PRACTICAL COMPLETION OF THE WORKS. HE SHALL DESIGN, INSTALL AND MAINTAIN ALL NECESSARY TEMPORARY WORKS TO COMPLY WITH THE ABOVE.

2.5. THE CONTRACTOR SHALL SUBMIT HIS PROPOSALS FOR THE TEMPORARY SUPPORTS AND METHOD STATEMENT SHOWING THE SEQUENCE OF CONSTRUCTION OF THE WORKS TO EMPLOYER FOR COMMENT BEFORE COMMENCEMENT OF THE WORKS.

2.6. THE CONTRACTOR SHALL BE RESPONSIBLE FOR ENSURING THAT SUFFICIENT TOLERANCES ARE PROVIDED AND INTEGRATED THROUGHOUT ALL ELEMENTS OF THE WORKS. THE CONTRACTOR IS TO TAKE ACCOUNT OF TOLERANCES DETAILED ELESWHERE WHEN COMPLYING WITH THIS CLAUSE.

NOTES CONTINUED

2.7. ALL DETAILS OF EXISTING CONSTRUCTION TO BE CONFIRMED ON SITE. ANY DISCREPENCIES ARE TO BE REPORTED TO THE ENGINEER IMMEDIATELY.

STRUCTURAL STEELWORK

3.1. STRUCTURAL STEEL TO BE GRADE S275 MILD STEEL TO BS4360.

3.2. ALL WELDS TO BE MINIMUM 6MM FULL PROFILE FILLET WELD UNLESS NOTED OTHERWISE.

3.3 BOLTS TO BE GRADE 8.8 TO BS4190, & GALVANISED.

3.4. ALL STEELWORK TO BE HOT DIP GALVANISED TO BS 729 (MIN 85 MICRONS) AFTER FABRICATION.

3.5. FABRICATION DRAWINGS BASED UPON SITE DIMENSIONS ARE TO BE PREPARED BY THE CONTRACTOR FOR ALL STEELWORK AND THESE ARE TO BE SUBMITTED TO THE ENGINEER FOR COMMENT.

3.6. MINOR SITE ERECTION DAMAGE & SITE DRILLED HOLES IN STEELWORK, TO BE MADE GOOD WITH "GALVAFROID" APPLIED IN ACCORDANCE WITH THE MANUFACTURERS INSTRUCTIONS.

3.7. ALL STEELWORK DESIGN, FABRICATION & ERECTION TO COMPLY WITH BS 5950

SITE NUMBER BRK0005

UPGRADE No TBA

WS Atkins Consultants Limited ©
Consulting Engineers,
Woodcote Grove,
Ashley Road,
Epsom, Surrey, England,
KT18 5BW
Fax (01372) 740055
Tel. (01372) 726140

THIS DRAWING CONTAINS INFORMATION DERIVED FROM THE MAST DESIGN DATA PROVIDED BY MASTS, TOWERS AND ANTENNAS Ltd AND JOHN ALLEN ASSOCIATES

A3 ORIGINAL

INCHES 0 1 2

MILLIMETRES 0 10 20 30 40 50

ISS.	DESCRIPTION	BY	DATE
0	PLANNING ISSUE	TCRB	10.01

SCALE	DRAWN	CHECKED	APPROVED
AS SHOWN	T.C.R.B		
	DATE 23.10.01	DATE	DATE

TITLE
PROPOSED
RADIO INSTALLATION FOR
CYBER HOUSE. MOLLY MILLARS LANE
WOKINGHAM,BERKSHIRE

DRAWING NUMBER 30/BRK0005/D5C/109

ISSUE 0

orange
hutchison telecom

St. James Court
Great Park Road
Almondsbury
Bristol
BS12 4QJ
Tel 01454 624600
Fax 01454 618501

WSA Project No. A86391

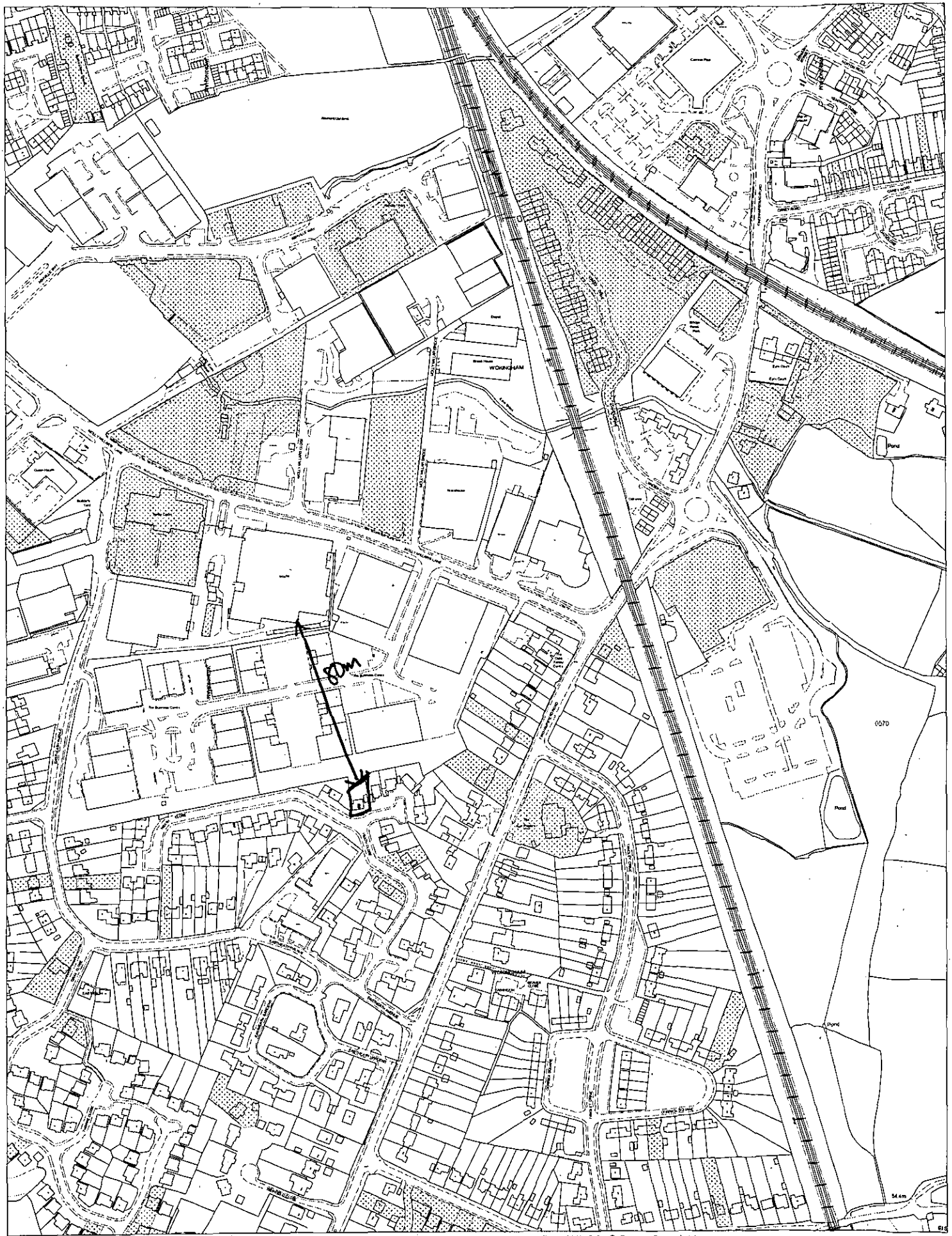

This map is based upon Ordnance Survey material with the permission of Ordnance Survey on behalf of the Controller of HMSO. © Crown Copyright.
Unauthorised reproduction infringes Crown Copyright and may lead to prosecution or civil proceedings.Wokingham District Council Licence LA086134

Development Control Section, Environmental Services, Wokingham District Council.
24 January 2002

Scale: 1 : 4000

N
W E
S

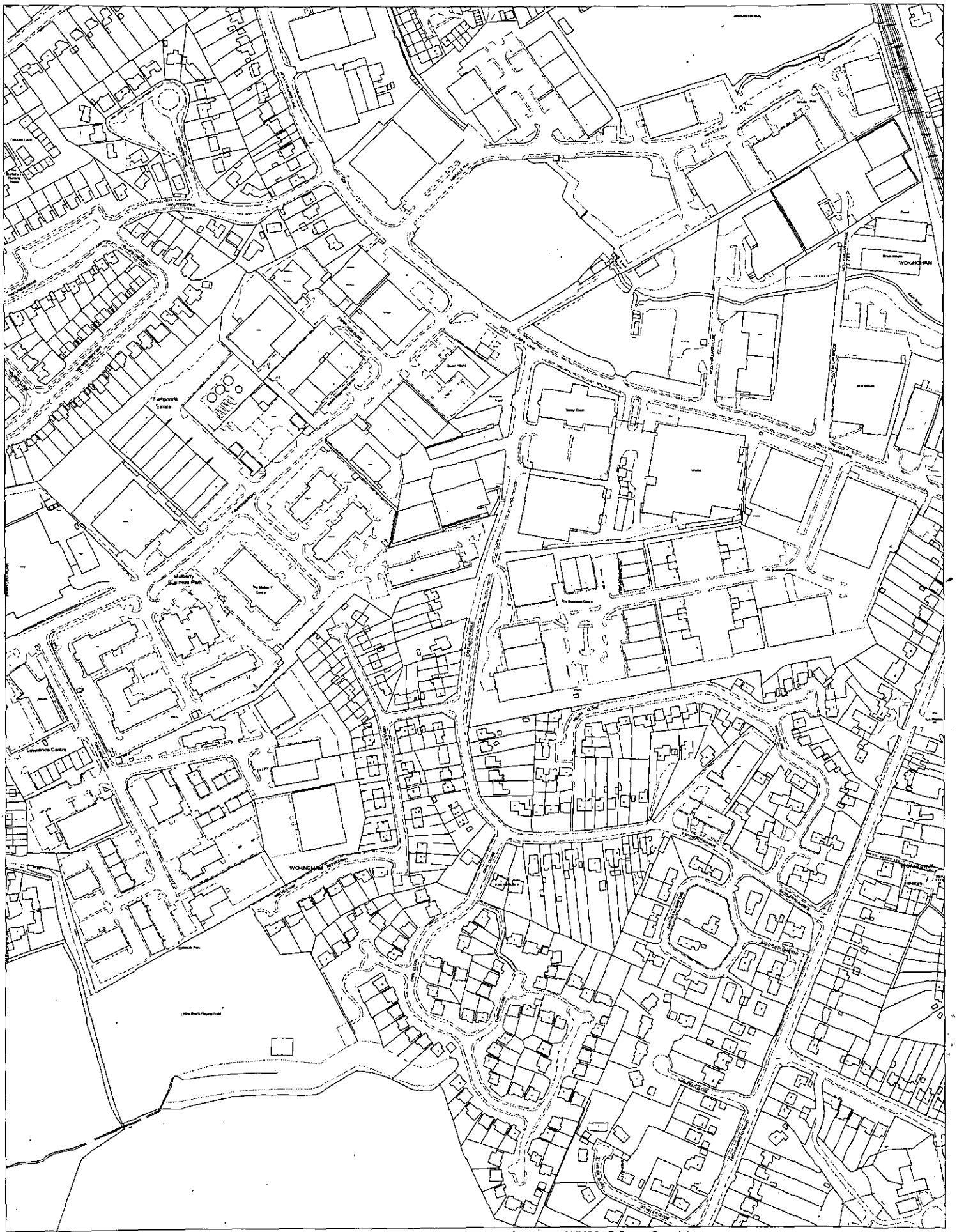

This map is based upon Ordnance Survey material with the permission of Ordnance Survey on behalf of the Controller of HMSO. © Crown Copyright.
Unauthorised reproduction infringes Crown Copyright and may lead to prosecution or civil proceedings.Wokingham District Council Licence LA086134

Development Control Section, Environmental Services, Wokingham District Council.

24 January 2002

Scale: 1 : 4000

N
W E
S

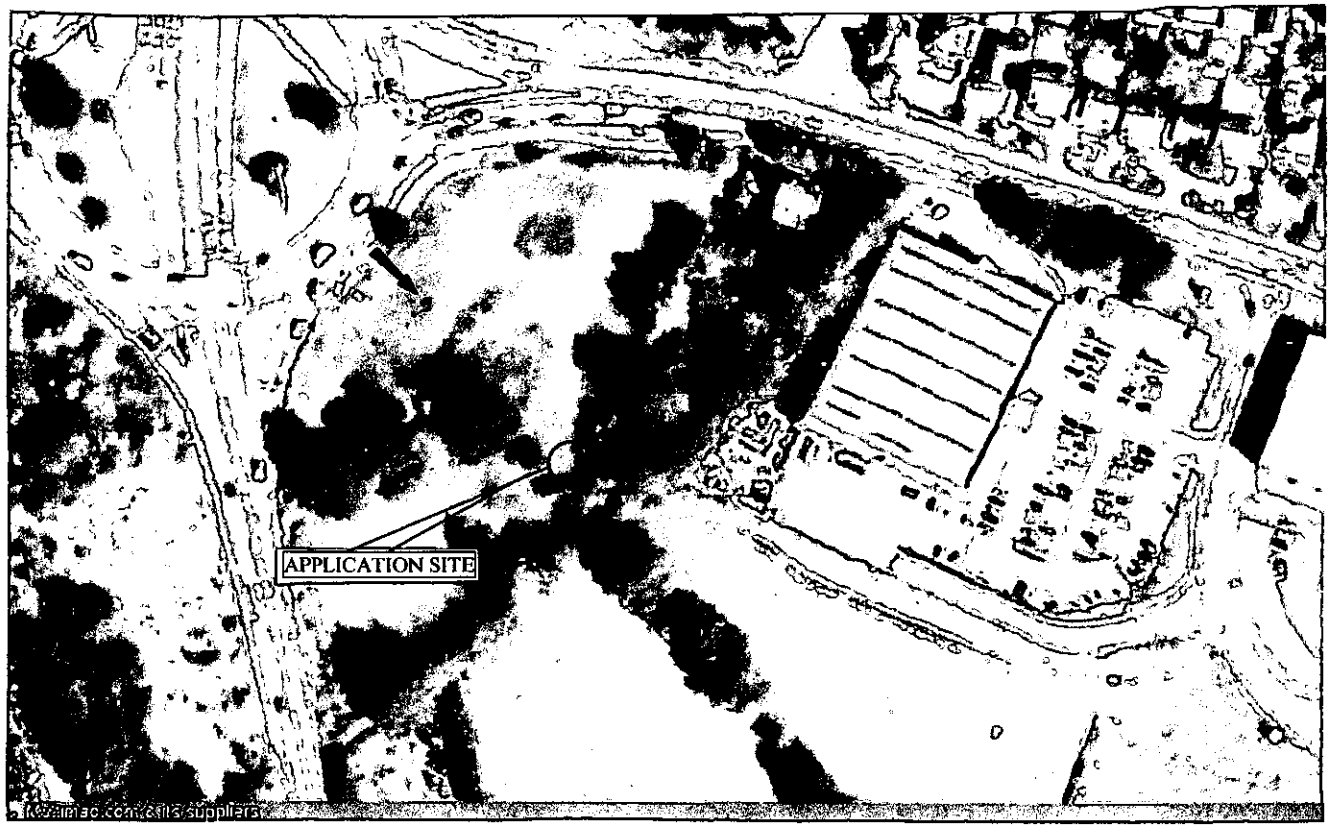

AIRPHOTO. View of site in relation to Loddon Bridge Roundabout and adjoining DIY superstore. *Courtesy of Multimap.com.*



PHOTOGRAPH. Long view of site from Loddon Bridge Roundabout (see arrow above). Lightweight lattice blends in well in both Summer and Winter.

Reproduced from the Ordnance Survey maps with permission
of the Controller of H.M. Stationery Offices © Crown Copyright.

11.DEC.2001 5514

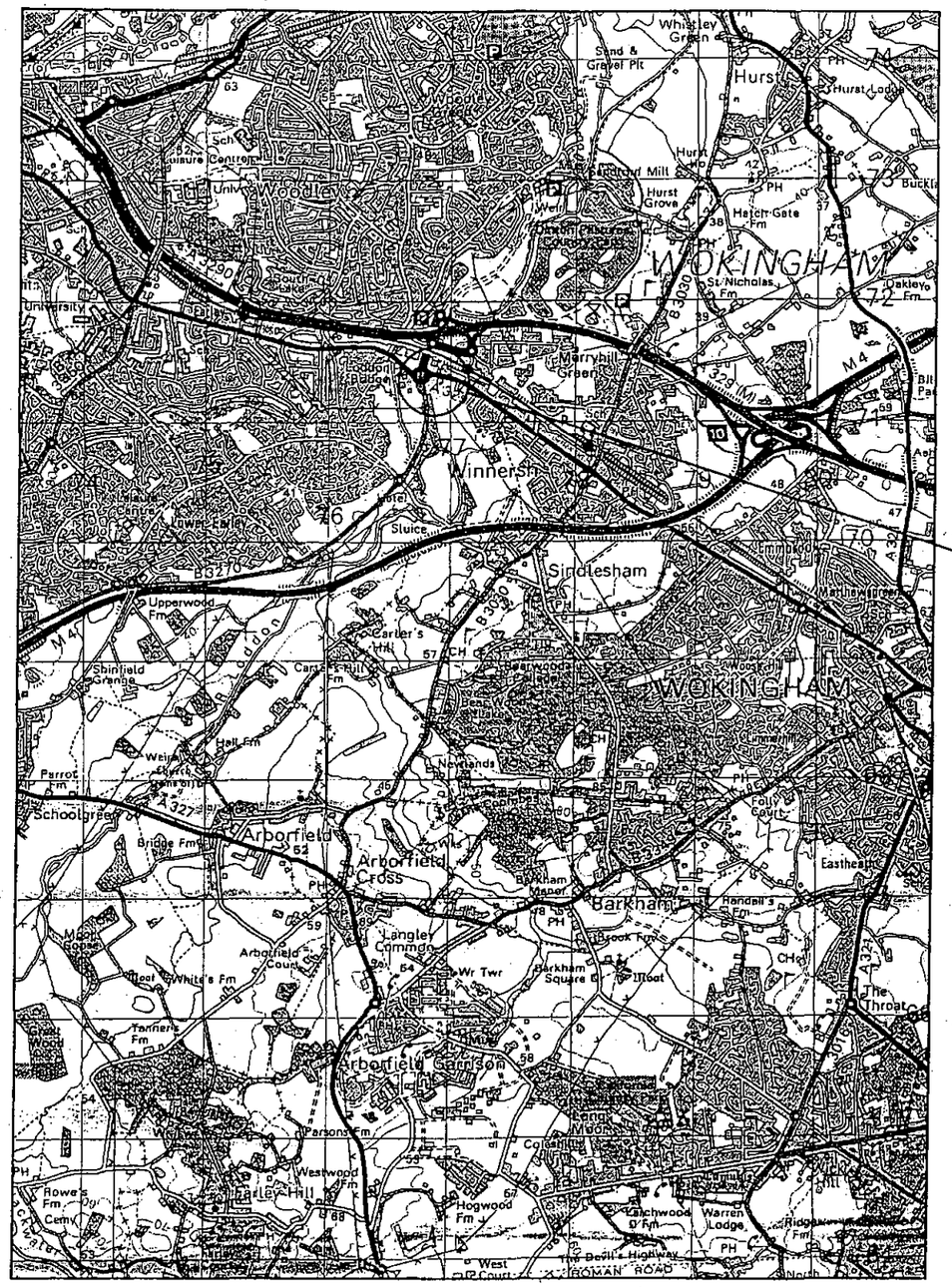

SITE GRID REFERENCE 476861 171286
(SCALE 1:50,000)

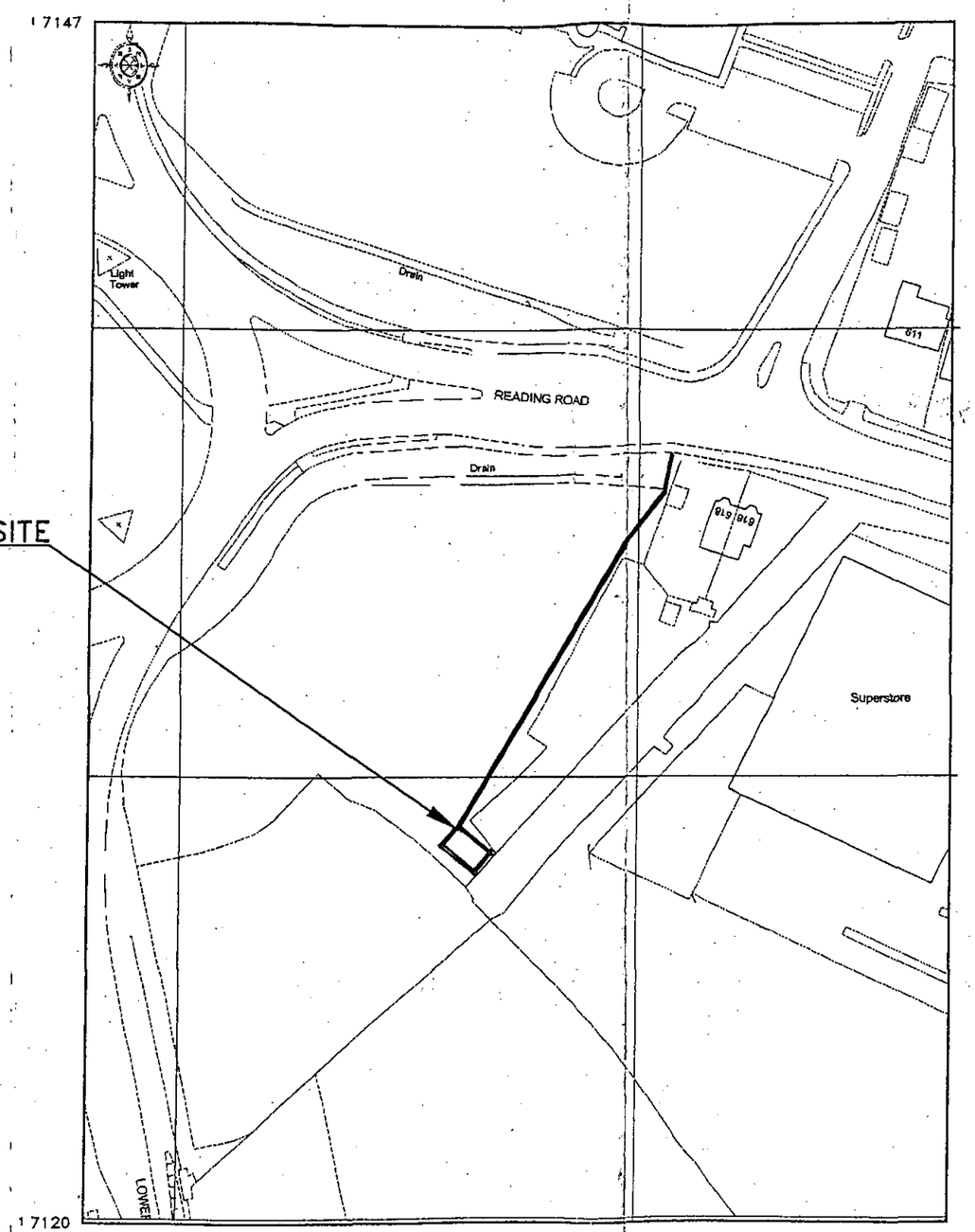

SITE GRID REFERENCE 476861 171286
(SCALE 1:1250)

0 10 20 30 40 50 60 70 80 90 100

Ballast Nedam
Telecom U.K. Ltd

vodafone

REV	BY/CHK	DESCRIPTION	DATE
-	NK/JC	Contract Issue.	24/05/01

STABLE CROFT – LAND ADJACENT TO ROUNDABOUT.
SITE LOCATION MAPS

SCALES	Drawing Status	DWG No.	Rev
AS SHOWN	Proposal	23413A–M1	–

PL.DEC.2001* 5514

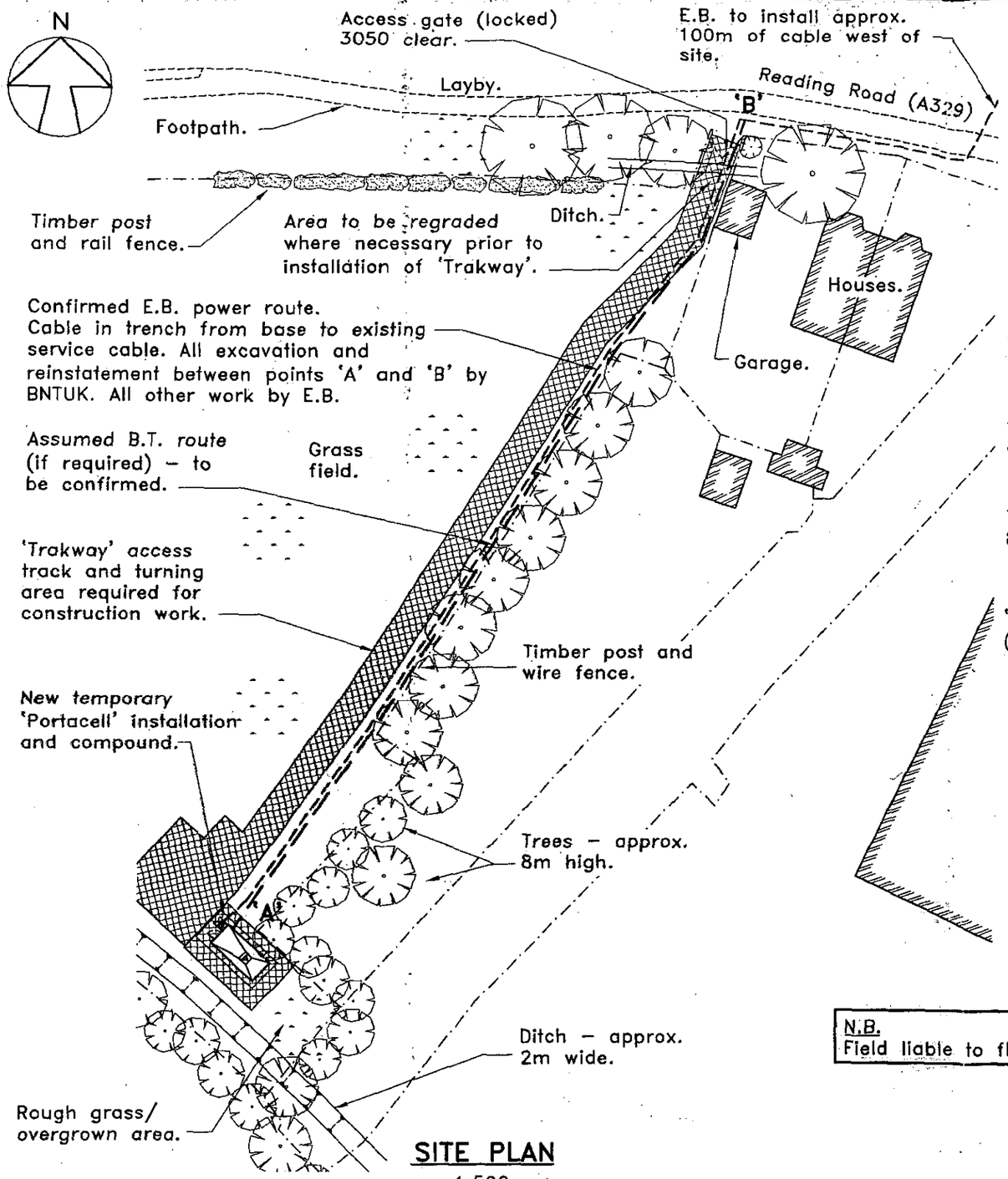

SITE PLAN

1:500

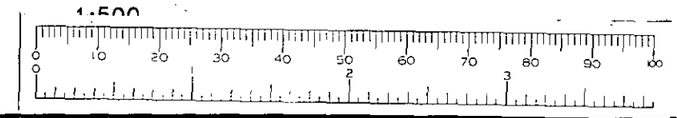

These drawings comply with the latest issues of Vodafone documentation H&SP 450 and 'Contractors Antenna Build Guidelines'.

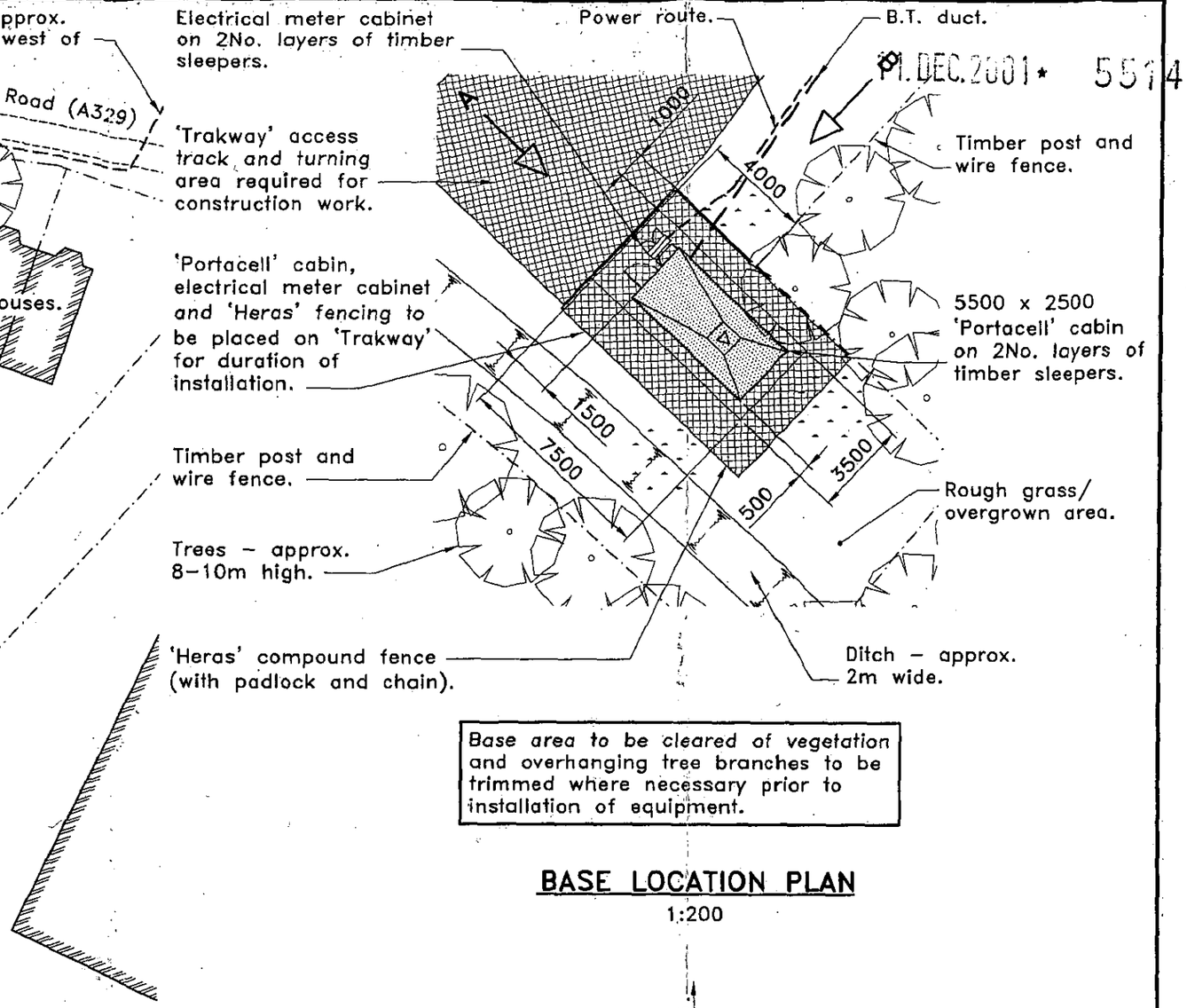

N.B.
Field liable to flooding.

Base area to be cleared of vegetation and overhanging tree branches to be trimmed where necessary prior to installation of equipment.

BASE LOCATION PLAN

1:200

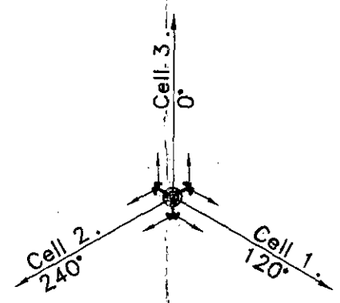

ANTENNA ORIENTATION PLAN.

1:200

Ballast Nedam
Telecom U.K. Ltd

vodafone

REV	BY/CHK	DESCRIPTION	DATE
-	NK/JC	Contract issue.	24/05/01
A	NK/JC	Power route confirmed and Antenna Orientation Plan rev'd. (2120)	13/08/01

STABLE CROFT – LAND ADJACENT TO ROUNDABOUT.
SITE PLANS

SCALES	Drawing Status	DWG No.	Rev
1:500 1:200	Proposal	23413A-T1	A

11.DEC.2001* 5514

NOTES.

'Portacell' cabin with :-
12m AD435 lattice tower.
3No. XPD 72-10 + 3No. Ref. 305-422 antennas on Phase 2 headload.
Orientations :- Cell 1 - 90° (0° - 6° downtilt)
Cell 2 - 210° (0° - 6° downtilt)
Cell 3 - 330° (0° - 6° downtilt)
6No. Tower Mounted Amplifiers (each TMA [type 1] - 200mm x 250mm x 100mm)
1No. A/C unit (caged).

Electrical meter cabinet.

2No. 300mm dia. microwave dishes - exact location and orientations to be confirmed.

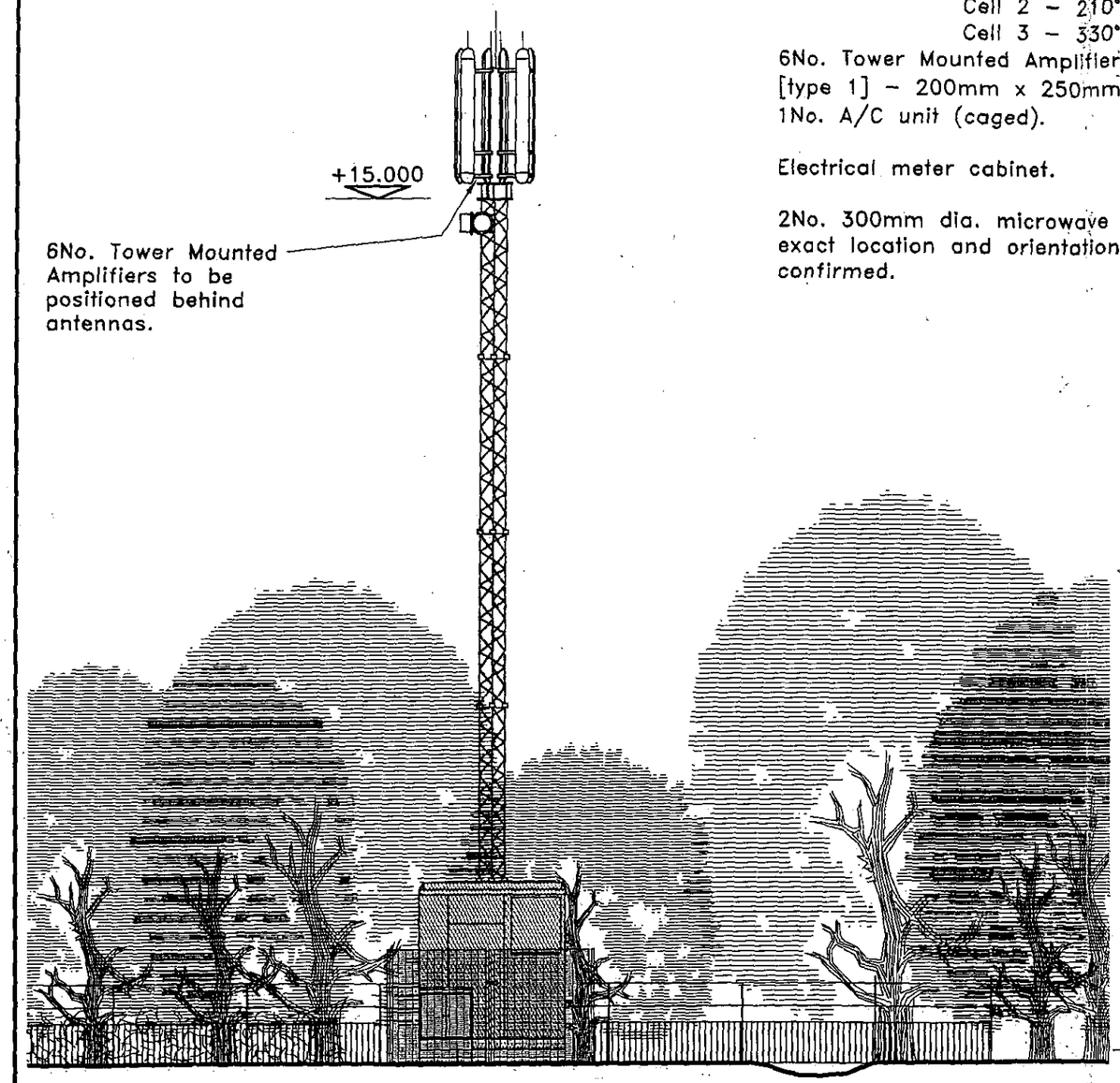

VIEW A.

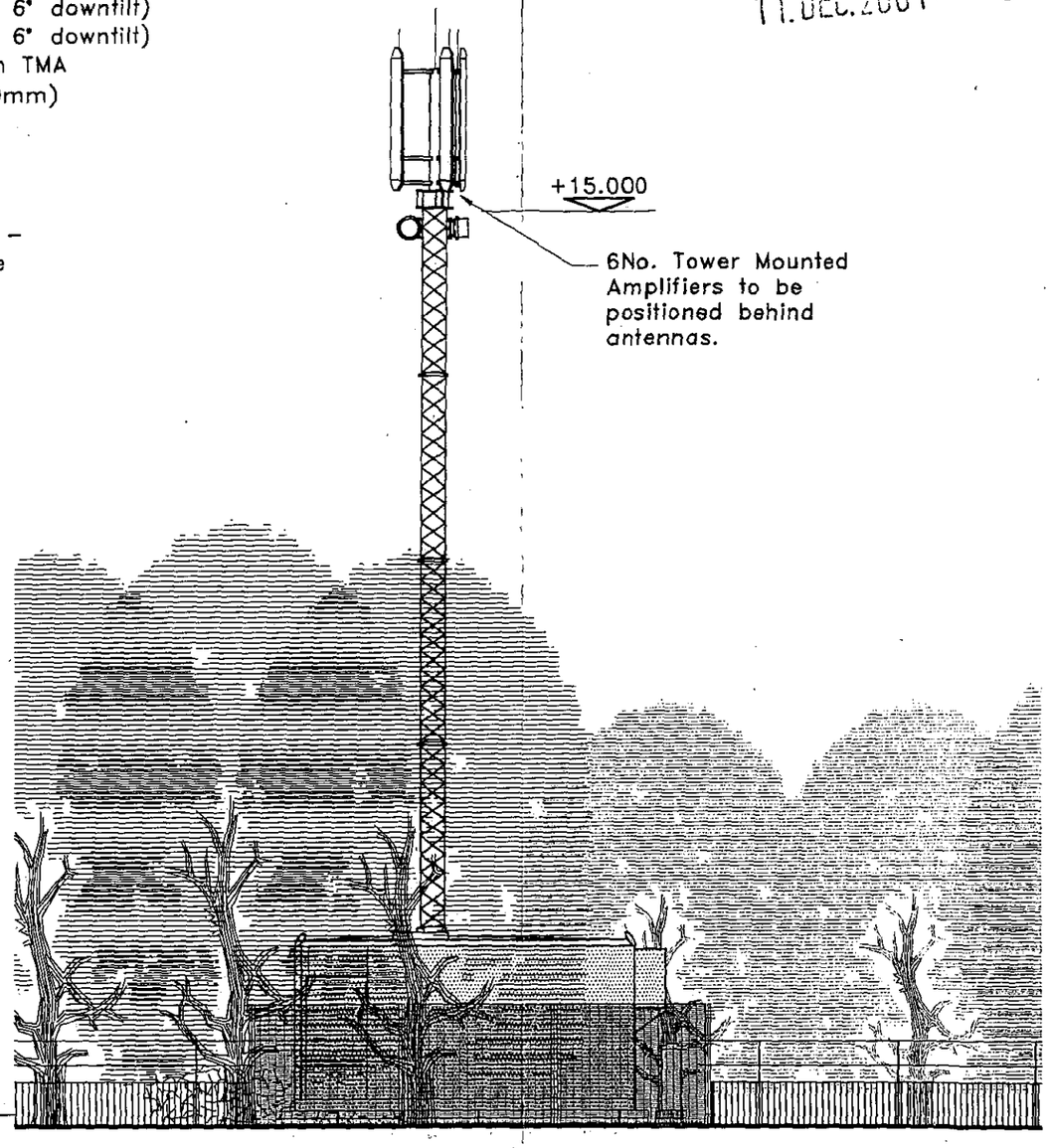

VIEW B.

These drawings comply with the latest issues of Vodafone documentation H&SP 450 and 'Contractors Antenna Build Guidelines'.

Ballast Nedam
Telecom U.K. Ltd

vodafone

REV	BY/CHK	DESCRIPTION		DATE
-	NK/JC	Contract issue.		24/05/01
A	PB/JC	Antenna configuration revised and notes amended.	(2120)	13/08/01

STABLE CROFT - LAND ADJACENT TO ROUNDABOUT.
ELEVATIONS

SCALES	Drawing Status	DWG No.	Rev
1:100	Proposal	23413A-T2	A

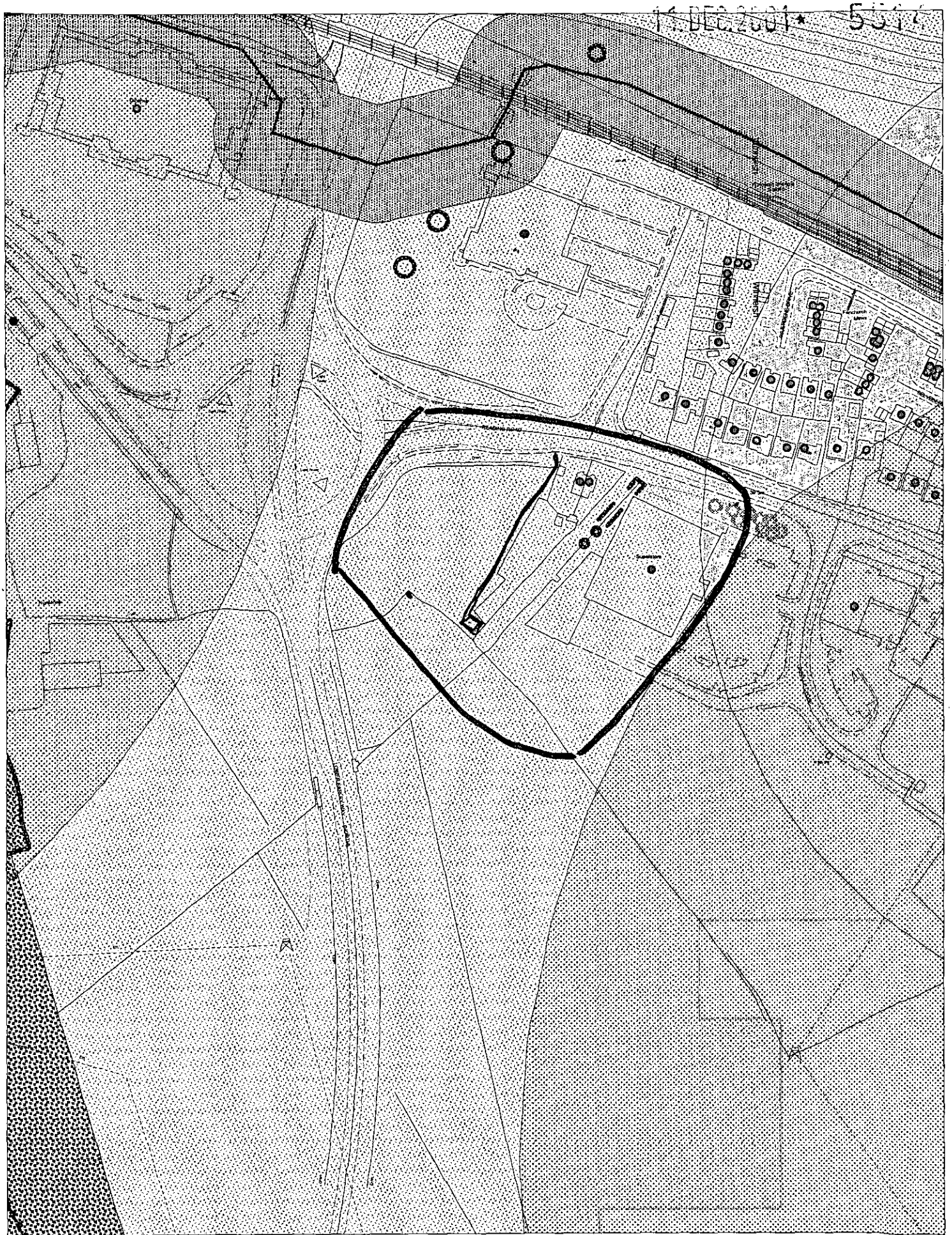

This map is based upon Ordnance Survey material with the permission of Ordnance Survey on behalf of the Controller of HMSO. © Crown Copyright.
Unauthorised reproduction infringes Crown Copyright and may lead to prosecution or civil proceedings.Wokingham District Council Licence LA086134

Development Control Section, Environmental Services, Wokingham District Council.

27 November 2001

Scale: 1 : 2500

N
W E
S