APPLICATION NO:
TL/2001/4653

LOCATION:
Land To The Rear Of Hurst Grange and adjacent to M4 Pound Lane, Hurst .

APPLICANT:
Hutchison 3G UK Ltd C/O The Barton Willmore Planning Partnership

PROPOSAL:
Proposed erection of one 15 metre telecommunications mast and associated equipment cabin

EARLIEST DATE FOR DECISION: **14/09/2001**

APPLICATION WILL HAVE EXPIRED ON:
03/10/2001

CASE OFFICER: **Emy Circuit**

RAILEX
Marbleboard

EASIFILE EP7

1243
02

WOKINGHAM DISTRICT COUNCIL

TOWN AND COUNTRY PLANNING ACTS

APPROVAL OF PRIOR APPROVAL OF TELECOMMUNICATIONS NOTIFICATION

Jennifer Walters
The Barton Wilmore Partnership
Beansheaf Farmhouse
Bourne Close
Calcot
Reading
RG31 7BW

Notification No:	TL/2001/4653
Parish:	Hurst
Proposal:	Erection of one 15 metre telecommunications mast and associated equipment cabin
Location:	Land to the rear of Hurst Grange and adjacent to M4, Pound Lane

The Wokingham District Council in pursuance of their powers under Part 24 of the Town and Country (General Permitted Development) (Amendment) Order 1998 **GRANTS** prior approval for the above stated telecommunications equipment, the conditions for which are specified hereunder.

Conditions:

1. No development shall take place until there has been submitted to and approved in writing by the Local Planning Authority a scheme of landscaping, which shall include indications of all existing trees and hedgerows on the land, and details of any to be retained, together with measures for their protection in the course of development; the approved landscaping scheme (with the exception of planting, seeding and turfing) shall be implemented within three months of the completion of the development hereby approved and retained.
2. All planting, seeding or turfing comprised in the approved details of landscaping shall be carried out in the first planting and seeding seasons following completion of the development; and any trees or plants which within a period of 5 years from the completion of the landscaping die, are removed or become seriously damaged or diseased shall be replaced in the next planting season with others of similar size and species.

Reasons:

1. In the interests of visual amenity.
2. In the interests of visual amenity.

Informative:

1. This permission relates to the application as amended with drawing number 00161126-101 Revision D, submitted to the Local Planing Authority on 20 September 2001, showing diameter of the headframe reduced to 800 mm, and does not approve the proposals as originally submitted.

A Cronin

Date: 2 October 2001

Anna Cronin
Head of Planning and Transportation Services

Tel: (0118) 974 6479 (Direct Line)
Fax: (0118) 974 6484
Email: Emy.Circuit@wokingham.gov.uk
Date: 21 January 2002
My ref: EXC/TL/2001/4653
Your ref: 10471/A3/6/BS/SL6064/sjd

Ben Sptphenson
Barton Wilmore
Beansheaf Farmhouse
Bourne Close
Calcot
READING
RG31 7BW

Environmental Services Department
Planning Services
P.O. Box 157
Shute End, Wokingham
Berkshire RG40 1WR
Tel: (0118) 974 6000
Fax: (0118) 974 6484
Minicom No: (0118) 974 6991
DX: 33506 – Wokingham

Dear Mr Stephenson

SUBMISSION OF LANDSCAPING DETAILS TO COMPLY WITH CONDITION 01 OF PRIOR APPROVAL TL/2001/4653, ERECTION OF 15 METRE TELECOMMUNICATIONS MAST AND ASSOCIATED EQUIPMENT ON LAND REAR OF HURST GRANGE AND ADJACENT TO POUND LANE, HURST

Thank you for your letter of 15 January clarifying the access arrangements for the above development. I am pleased to notify you that the landscaping details shown on drawing Nos 00161126-201 Rev B2 and 00161126-202 Rev B2, received on 16 January 2002, are acceptable.

If you have any queries with regard to this matter, please contact Emy Circuit on 0118 974 6479.

Yours sincerely

M L Thorp,
Principal Development Control Officer

TO: **DEVELOPMENT CONTROL**
Emy Circuit

FROM: Environmental Design

DATE: 18 January 2002

Location:	Land to rear of Hurst Grange and adjacent to M4, Pound Lane, Hurst.
Proposal:	Proposed erection of one 15 metre telecommunications mast and associated equipment cabin.
Application Number:	TL/2001/4653

In response to your consultation dated 27 November 2001 for the above application, the landscape comments are as follows:

The proposal indicating a temporary access track and additional hedgerow planting around the base of the compound (drawing no. 00161126-202) acceptable.

Catherine Brimble

Catherine Brimble
Landscape Architect

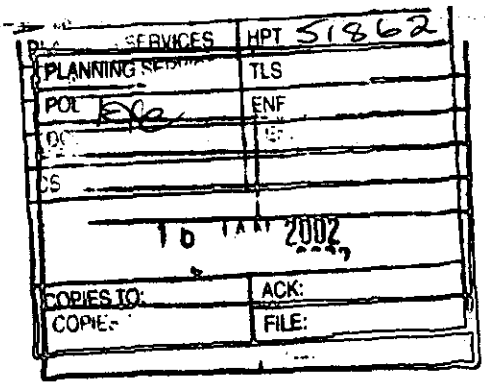

The Barton Willmore Planning Partnership - Reading
Beansheaf Farmhouse, Bourne Close, Calcot,
Reading, RG31 7BW.
Tel 0118 943 0000 Fax 0118 943 0002
e-mail: planning@reading.bartonwillmore.co.uk

Barton Willmore
Planning

Woking District Council
Planning Department
Council Offices
PO BOX 157
Shute End
Wokingham RG40 1WR

FAO MS E CIRCUIT

10471/A3/6/BS/SL6064/sjd

15th January 2002

Dear Ms Circuit

HUTCHISON 3G UK LTD, LAND TO THE REAR OF HURST GRANGE (EWER PARK STUD) DISCHARGE OF CONDITION 01 OF APPLICATION TL/2001/4653

Further to our latest telephone conversation (15th January 2002) regarding the above, we herewith provide revised drawings (Drawing No 00161126-201, 202. Issue B2) to take account of concerns which were expressed by yourself on 19th December 2001 regarding the proposed permanent track to the site.

In place of the permanent access as detailed in my letter of the 14th November, we propose to provide a temporary road surface "Trackway" to the site for the construction period only.

The "Trackway" will be 3m wide and run from Pound Lane south to the site, and upon completion of the works this surface will be removed from the site. The site works are of a short duration and will not involve many deliveries, however we will ensure that no mud or debris from the site are not left on the public highway. By using "Trackway" we will provide a clean route of access to the site.

Additionally access to the site is not required on a year round as maintenance is only required occasionally, with sufficient access being provided for this purpose from the adjoining track which runs parallel to the site.

Town Planners • Environmental Consultants
Architects • Master Planners • Project Services

Contact: Gareth Capner, Ian Tant, Roger Turnbull, Mark Sitch, Angela Doone

A list of partners can be inspected here and at our associated offices in:
Bristol Cambridge Edinburgh Leeds London West Malling (Kent)

We trust that the above and the enclosed are sufficient to enable the discharging of condition 1, and we would be most grateful if this could be confirmed at your earliest convenience. My client wishes to commence development on the site as soon as possible, and we would therefore be most grateful if we could have a response by return if possible. Should you have any queries or require further information please contact me at the above address.

Yours sincerely

B Stephenson.

BEN STEPHENSON
Planner

cc: Steve Fotheringham - Hutchison 3G UK Ltd.

Gareth Baber - Hutchison 3G UK Ltd.
Construction Controller.

Encs: Drawing 00161126-201, 202. Issue B2.

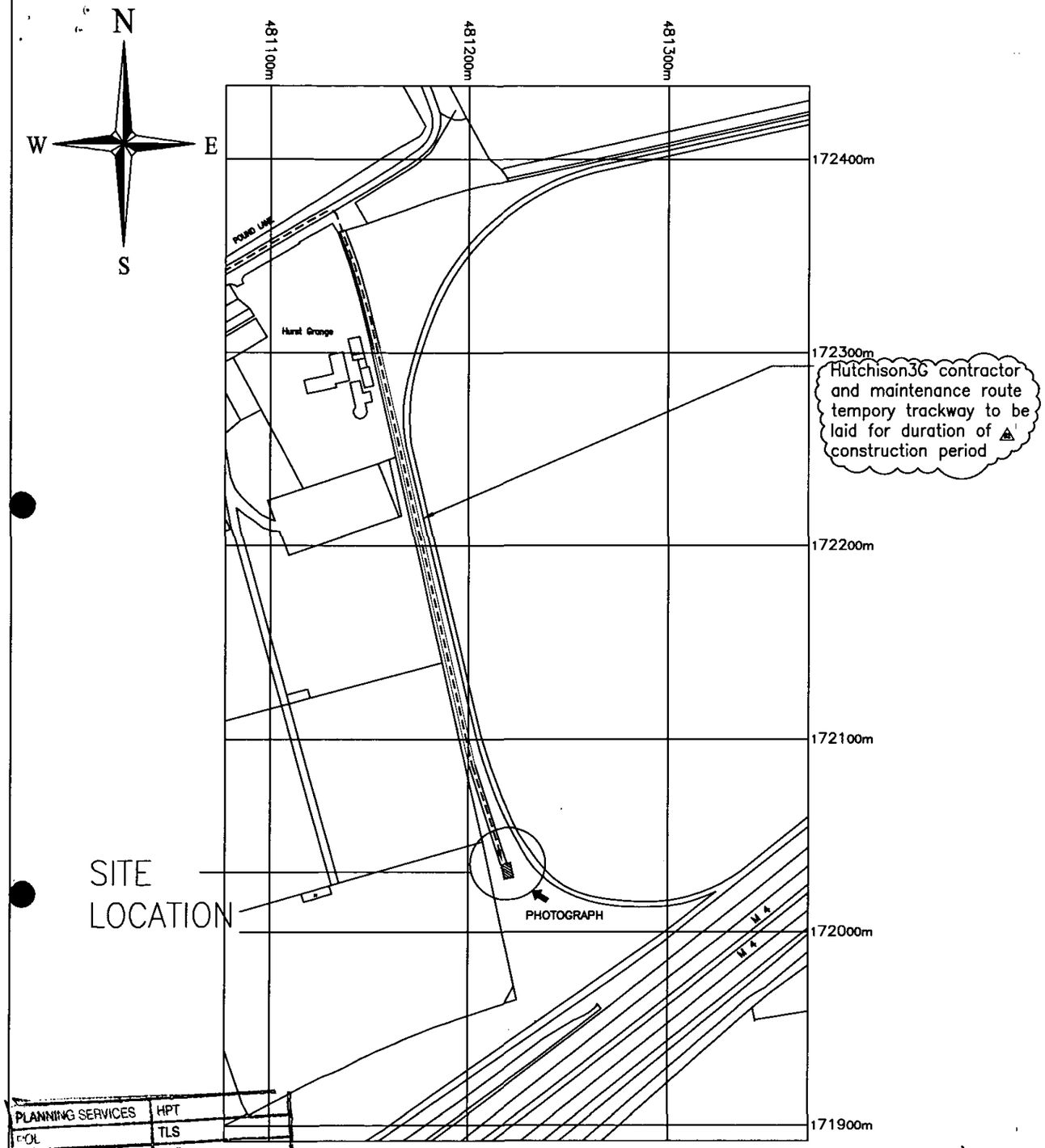

PLANNING SERVICES	HPT
[illegible]	TLS
[illegible]	ENF
16 JAN 2002	
COPIES TO:	ACK:
	FILE:

SITE LOCATION PLAN

SCALE: 1:2500

O.S. Co-ordinates 481220/172030

Based upon Ordnance Survey at 1:2500 with the permission of the Controller of Her Majesty's Stationery Office.

© Crown copyright.

Licence No. 100020449

THIS DRAWING IS THE PROPERTY OF HUTCHISON 3G & MUST NOT BE COPIED, TRACED OR REPRODUCED WITHOUT THEIR WRITTEN CONSENT.

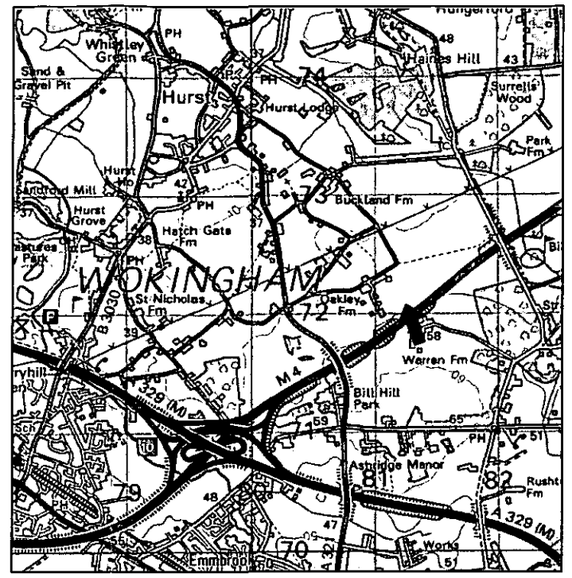

GENERAL LOCATION PLAN

SCALE: 1:50000

SITE PHOTOGRAPH

Details to comply with conditions

	APPROVED	REJECTED	DATE
ACQUISITION			
CONSTRUCTION			
RADIO			
TRANSMISSION			

LEGEND

- MHA
- Safety Sign
- Proposed External Light
- Proposed Earth Pit
- Proposed Power Route
- Existing Power
- Existing Water
- Existing BT
- Existing Overhead Cables
- Existing Wooden Fence
- Proposed Access Track
- Proposed Gravel Area
- Proposed Cable Tray

NOTES

1.1 Do not scale.

1.2 All dimensions are in mm unless otherwise specified.

1.3 Assume all site details are existing unless otherwise specified.

Proposed Site Access/Route

EXIT THE M4 FROM J10 ONTO THE A329(M) TOWARDS BRACKNELL. TURN OFF THE A329(M) AT THE FIRST EXIT ONTO THE A329 TOWARDS WOKINGHAM. IN WOKINGHAM FOLLOW THE ONE WAY RING ROAD AROUND UNTIL ONE REACHES SIGNS FOR THE A321 HEADING NORTH TOWARDS TWYFORD TAKE THE FIRST RIGHT HAND TURN AFTER CROSSING THE SECOND MOTORWAY BRIDGE ONTO POUND LANE. CONTINUE ALONG POUND LANE FOR APPROX 800M JUST BEFORE A SHARP LEFT HAND BEND TURN RIGHT INTO THE FIELD. (SEE LOCATION PLAN)

REV.	DATE	DESCRIPTION	CHK	APP
B2	06/12/01	ACCESS TRACK NOTE REVISED	SJS	MDC
B1	05/12/01	AMENDMENTS TO TITLE BLOCK	SJS	MDC

Hutchison 3G

Hutchison 3G UK Limited
Star House, 20 Grenfell Road, Maidenhead, SL6 1EH
Tel: 01628 765 000 Fax: 01628 765 001
H3G Base Station Information line: 0845 6043000
Available 8am-10pm 7 days a week.

SMITH WOOLLEY TELECOM
24 BARTON STREET
BATH
BA1 1HG
TEL: 01225 427000
FAX: 01225 463000
EMAIL: mailto@swtele.co.uk

Site: EWER PARK STUD, POUND LANE
HURST, Nr WOKINGHAM
BERKSHIRE
RG10

Title: LOCATION PLAN

Purpose of Issue: DETAILED DESIGN

Drawing no.: 00161126-201

Site ID: 00161126

Nominal ID: SL 6054

Issue: B2 | Scale: AS SHOWN | Checked: MDC | Date: 06/01
Drawn: DLF | Date: 26/09/01 | Approved: PD | Date: 06/01

Consultant ref no: CAM5004H

ORIGINAL SIZE - A3

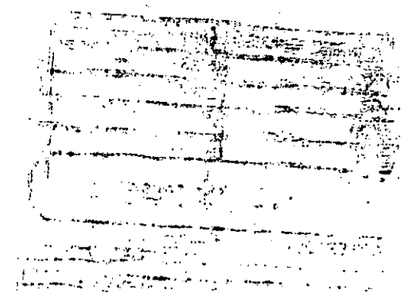

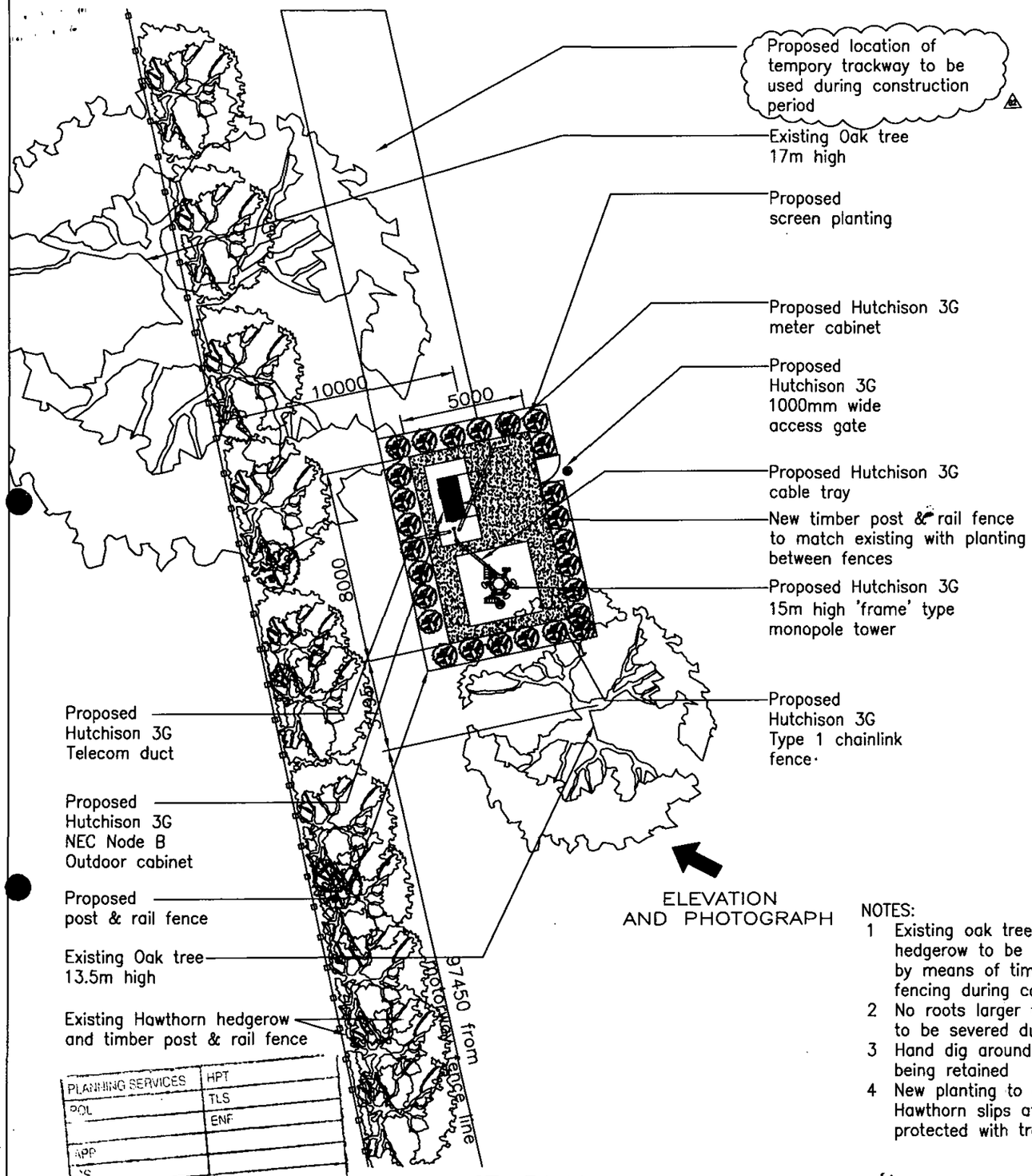

SITE PLAN
SCALE: 1:200

ELEVATION AND PHOTOGRAPH

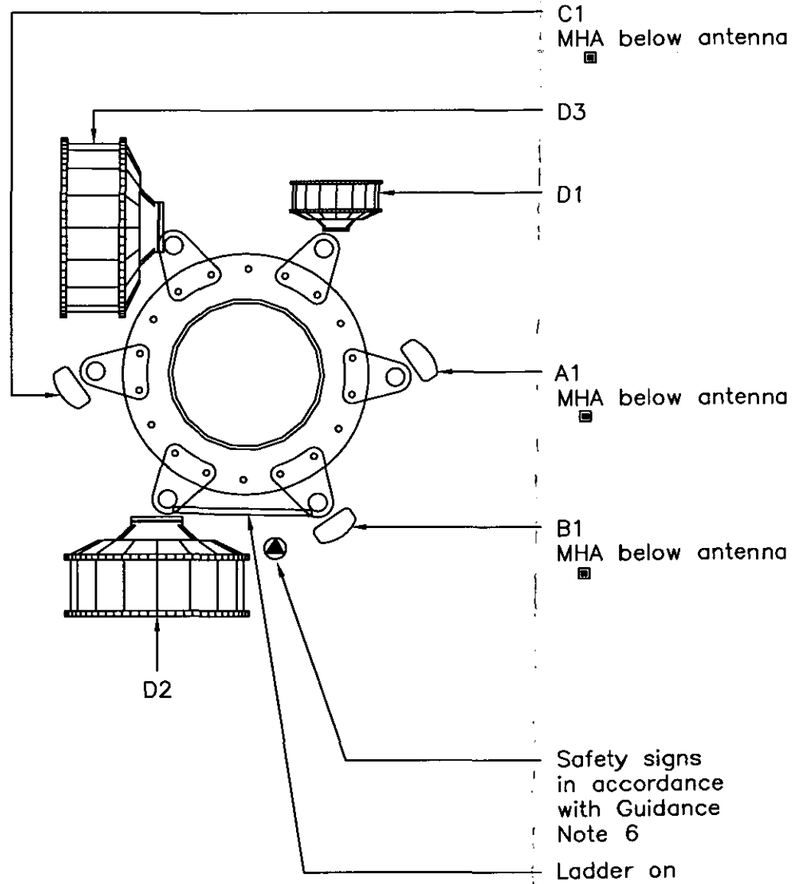

TOWER DETAIL PLAN
SCALE: 1:20

NOTES:
1. Existing oak trees & hedgerow to be protected by means of timber palisade fencing during contruction works
2. No roots larger than 50mm dia to be severed during excavation
3. Hand dig around all roots being retained
4. New planting to consist of Hawthorn slips at 600mm centres protected with tree guards

Details to comply with condirions

PLANNING SERVICES	HPT
POL	TLS
	ENF
APP	
VS	
16 JAN 2002	
COPIES TO:	ACK:
	FILE:



	APPROVED	REJECTED	DATE
ACQUISITION			
CONSTRUCTION			
RADIO			
TRANSMISSION			

LEGEND
- MHA
- Safety Sign
- Proposed External Light
- Proposed Earth Pit
- Proposed Power Route
- Existing Power
- Existing Water
- Existing BT
- Existing Overhead Cables
- Existing Wooden Fence
- Proposed Access Track
- Proposed Gravel Area
- Proposed Cable Tray

NOTES
1.1 Do not scale.
1.2 All dimensions are in mm unless otherwise specified.
1.3 Assume all site details are existing unless otherwise specified.

PROPOSED HUTCHISON 3G EQUIPMENT

Proposed Cabin/Cabinet Details
Hutchison Ref:- NEC NODE B
Dimensions:- 1800x800x1310 OUTDOOR CABINET
Colour:- STANDARD

Proposed Site Access/Route
REFER TO DRAWING No. 00161126-201 FOR ACCESS DETAILS

Proposed Tower Details
Height:- 15m
Type:- MONOPOLE - FRAME TYPE
Hutchison Ref:- EVE
Colour:- SELF COLOUR

Proposed Transmission Details

No.	Size	Hgt	Type	Orientation
D1	300ø	14.85m	TBC	0°
D2	600ø	14.7m	TBC	180°
D3	600ø	14.7m	TBC	270°

(Height is measured to centre of DRL)

Proposed Antenna Details

No.	Size	Hgt	Type	Orientation	Feeder lgth
A1	[illegible]	13.8m	RACAL 2212	55°	19m
B1	[illegible]	13.8m	RACAL 2212	145°	19m
C1	[illegible]	13.8m	RACAL 2212	235°	19m

(Antenna height is measured to base of antenna)
(Feeder lengths from Cabin/Cabinet to each antenna)

Exclusion zone
H3G's Exclusion Zones comply with ICNIRP's Public Exposure limits

Fencing
TYPE 1, NORMAL SECURITY, 1800mm HIGH CHAIN LINK FENCE AND 3 STRANDS BARBED WIRE ON VERTICAL EXTENSION POSTS, OVERALL FENCE HEIGHT 2100mm

REV.	DATE	DESCRIPTION	CHK	APP
B2	08/12/01	ACCESS TRACK REVISED	SJS	MDC
B1	05/12/01	AMENDMENTS TO TITLE BLOCK	SJS	MDC

Hutchison 3G

Hutchison 3G UK Limited
Star House, 20 Grenfell Road, Maidenhead, SL6 1EH
Tel: 01628 765 000 Fax: 01628 765 001
H3G Base Station Information line: 0845 6043000
Available 8am-10pm 7 days a week.

SMITH WOOLLEY TELECOM
24 BARTON STREET
BATH
BA1 1HG
TEL: 01225 427000
FAX: 01225 463000
EMAIL: mailto@swtele.co.uk

Site: EWER PARK STUD, POUND LANE
HURST, Nr WOKINGHAM
BERKSHIRE
RG10

Title: SITE PLAN
Purpose of Issue: DETAILED DESIGN
Drawing no.: 00161126-202
Site ID: 00161126
Nominal ID: SL 6054

Issue:	Scale: AS SHOWN	Checked: MDC	Date: 08/01
B2	Drawn: BLF	Date: 26/08/01	Approved: PD	Date: 08/01

Consultant: CAM5004H

ORIGINAL SIZE - A3

THIS DRAWING IS THE PROPERTY OF HUTCHISON 3G & MUST NOT BE COPIED, TRACED OR REPRODUCED WITHOUT THEIR WRITTEN CONSE

Date: 27 November 2001

To: Case Officer

We have received Details to Comply with Conditions for the following planning application:

Application Number: TL/2001/4653

Location: Land To The Rear Of Hurst Grange and adjacent to M4, Pound Lane, Hurst.

Proposal: Proposed erection of one 15 metre telecommunications mast and associated equipment cabin

Applicant: Hutchison 3G UK Ltd C/O The Barton Willmore Planning Partnership.

Case Officer: Emy Circuit

The new plans show the following: Landscape scheme. Drawing no 00161126-202 & letter dated 14/11/01.

Comments are required by 07/12/2001.

Should you have any queries regarding this application please contact the case officer Emy Circuit on (0118) 974 6479.

(RING ONE)

1970

REVISED PLANS | ADDITIONAL PLANS | MINOR AMENDMENTS | ADDITIONAL / REVISED PLANS TO COMPLY WITH CONDITIONS

App No. TL/2001/4653 (Planaps) / (Ludhouse) Date Rec. 19/11/01

Location: land near or Hurst Grange & adjacent to the M4, Pound Lane Hurst Parish Hurst.

Applicant: Hutchinson 3G

Description of attached plans landscape scheme

Drawing No's: 001611126-202 + letter dated 14/11/01

CONSULTEES

Copies of plans will automatically be sent to Woodley Library, Part 1 Reg., Parish Council, Ward Councillors and the Case Officer unless specified.

Please tick which of the following you wish consulted.

OTHERS: _____

_____

_____

_____

Drawing No's

1. NK (Landscape & Trees) _____ ✓
2. NK (Env. Design) _____
3. XA (Highways) _____
4. NF (Building Control) _____
5. BC/DC Liaison _____

A full set of plans will be sent to all consultees unless particular drawing No's are specified in the spaces above.

NEIGHBOURS: _____

_____ Date for Responses 10 days

FURTHER ACTION

Re-advertise App. Y / (N) (Delete as required)

Redate Application Y / (N) From _____

New Site Notice Y / (N)

New Description _____

CASE OFFICER EXC

Consultations Sent by Admin. on 27.11.PS

Yellow - Part One Copy
Green - Officer's Copy

(RING ONE)

1970

REVISED PLANS | ADDITIONAL PLANS | MINOR AMENDMENTS | ADDITIONAL / REVISED PLANS TO COMPLY WITH CONDITIONS

App No. TL/2001/4653 (Planaps) / (Ludhouse) Date Rec. 19/11/01

Location: Land near or Hurst Grange & adjacent to the M4, Pound Lane Hurst Parish Hurst.

Applicant: Hutchinson 3G

Description of attached plans landscape scheme

Drawing No's: 0016011260-202 + letter dated 14/11/01

CONSULTEES

Copies of plans will automatically be sent to Woodley Library, Part 1 Reg., Parish Council, Ward Councillors and the Case Officer unless specified.

Please tick which of the following you wish consulted.

OTHERS: _____

_____

_____

_____

Drawing No's

1. NK (Landscape & Trees) _____ ✓
2. NK (Env. Design) _____
3. XA (Highways) _____
4. NF (Building Control) _____
5. BC/DC Liaison _____

A full set of plans will be sent to all consultees unless particular drawing No's are specified in the spaces above.

NEIGHBOURS: _____

_____ Date for Responses 10 days

FURTHER ACTION

Re-advertise App. Y / N (Delete as required)

Redate Application Y / N From _____

New Site Notice Y / N

New Description _____

CASE OFFICER EXC

Consultations Sent by Admin. on 27.11.PS

Yellow - Part One Copy
Green - Officer's Copy

PLANNING DEPT. A9891
POL TLS
DC CRC ENV
APP
CS
15 NOV 2001
COPY

The Barton Willmore Planning Partnership - Reading
Beansheaf Farmhouse, Bourne Close, Calcot,
Reading, RG31 7BW.
Tel 0118 943 0000 Fax 0118 943 0002
e-mail: planning@reading.bartonwillmore.co.uk

Barton Willmore
Planning

Wokingham District Council
Environmental Services Department
PO Box 157
Shute End
Wokingham
BERKSHIRE

PLANS TO MEET CONDITIONS

4653

10471/A3.6/BS/dw

F A O MS E Circuit

14th November, 2001

Dear Ms Circuit

DISCHARGE OF CONDITION 01 OF APPLICATION TL/2001/4653

Further to the approval of planning permission for the erection of one 15m telecommunications mast and associated equipment cabin, at Land to the rear of Hurst Grange and adjacent to the M4, Pound Lane, we herewith provide details of the proposed landscaping works and scheme pursuant to condition 01 of TL/2001/4653.

Enclosed is drawing number 00161126-202 which provides details of the proposed landscaping works, identifying all existing trees, hedges, and means of enclosure around the site. A schedule via notes on the drawing identifies measures to protect the existing vegetation:

1. Existing oak trees and hedgerow are to be protected by means of a timber palisade fencing during construction works;

2. No roots larger than 50mm in diameter to be severed during excavation;

3. Hand dig around all roots being retained;

With regards to the proposed landscaping the drawing identifies the means of enclosure of the compound by a 1.8m high chain link fence. The means of screening the compound consists of a new timber post and rail fence set 1m in front and encircling the 1m wide access gate. Between the compound security fence and the outer post and rail fence is the proposed screen planting. This is identified in the drawing notes at point 4:

4. New planting to consist of Hawthorn slips at 600mm centres protected with tree guards.

Certificate No. FS 29837

Town Planners • Environmental Consultants
Architects • Master Planners • Project Services

Contact: Gareth Capner, Ian Tant, Roger Turnbull, Mark Sitch, Angela Doone

A list of partners can be inspected here and at our associated offices in:
Bristol Cambridge Edinburgh Leeds London West Malling (Kent)

We trust that the enclosed drawing and this accompanying letter provides sufficient information to enable the successful discharging of condition 01 of planning application TL/2001/4653. Should you have any queries or required any further information please contact Jennifer Walters or myself at the above address.

Yours sincerely

B Stephenson.

BEN STEPHENSON
Planner

Encs - Drawing Number 00161126-202

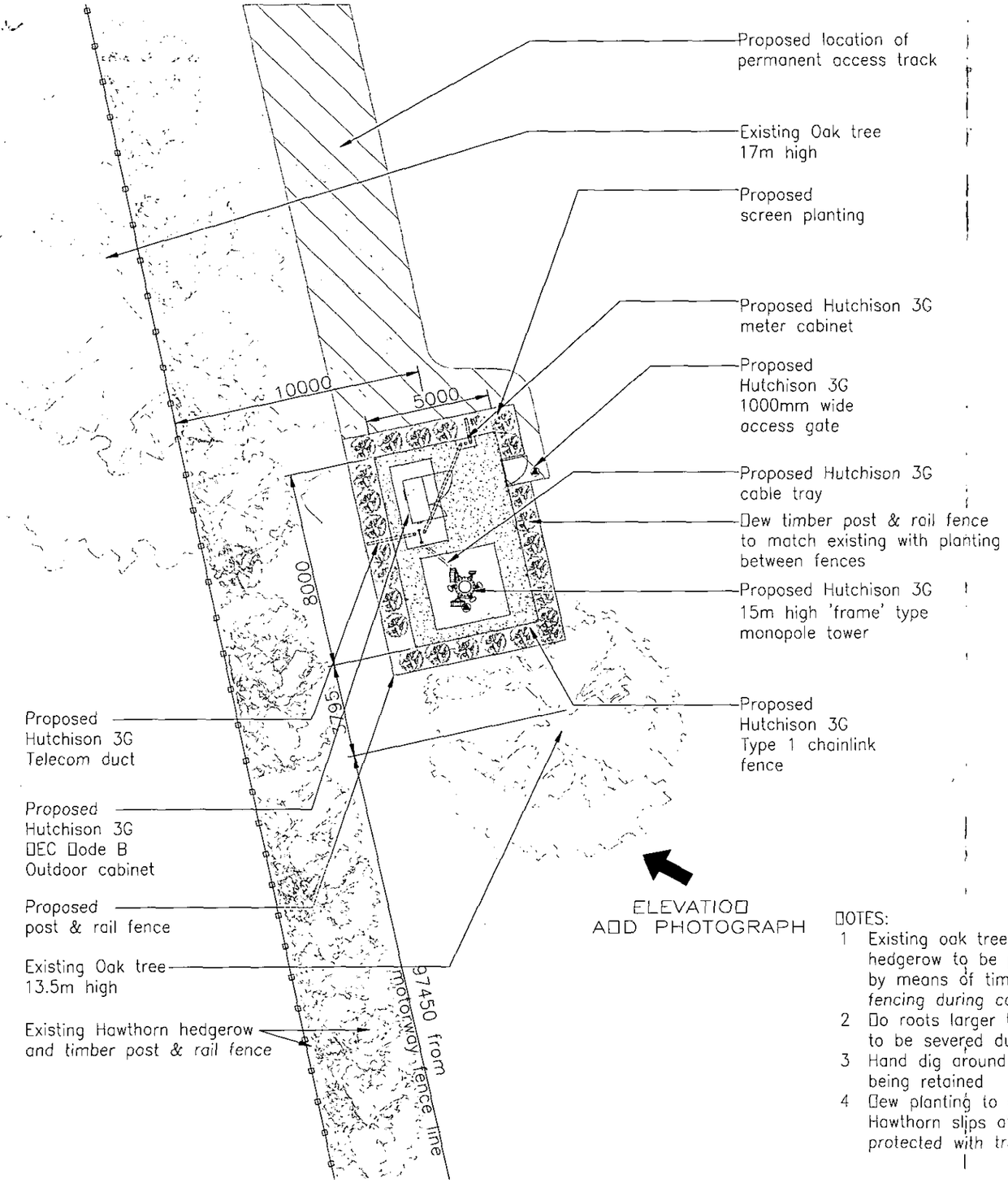

SITE PLAD
SCALE: 1:200

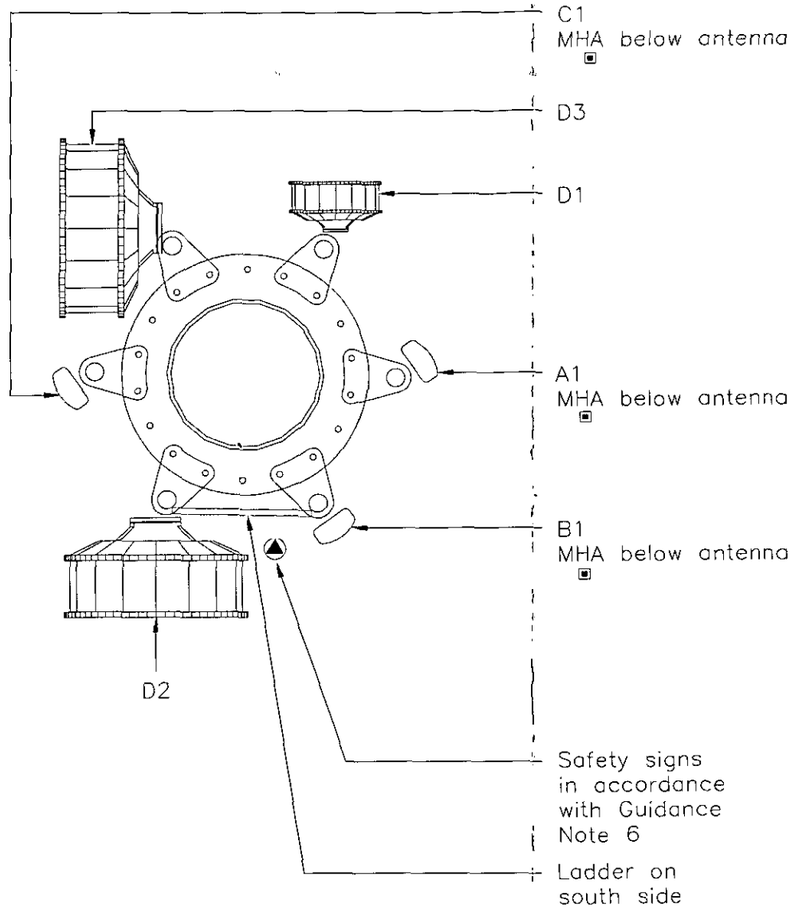

TOWER DETAIL PLAD
SCALE: 1:20

ELEVATIOD ADD PHOTOGRAPH

DOTES:
1. Existing oak trees & hedgerow to be protected by means of timber palisade *fencing during contruction works*
2. Do roots larger than 50mm dia to be severed during excavation
3. Hand dig around all roots being retained
4. Dew planting to consist of Hawthorn slips at 600mm centres *protected with tree guards*

4653

PLANS TO MEET CONDITIONS
SUPERSEDED

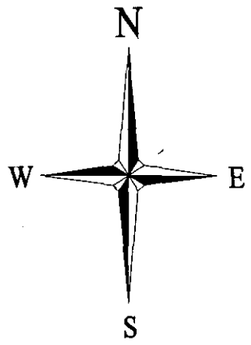

	APPROVED	REJECTED	DATE
ACQUISITIOD			
CODSTRUCTIOD			
RADIO			
TRADSMISSIOD			

LEGEDD

- MHA
- Safety Sign
- *Proposed External Light*
- Proposed Earth Pit
- Proposed Power Route
- Existing Power
- Existing Water
- Existing BT
- Existing Overhead Cables
- Existing Wooden Fence
- Proposed Access Track
- Proposed Gravel Area
- Proposed Cable Tray

DOTES

1.1 Do not scale.

1.2 All dimensions are in mm unless otherwise specified.

1.3 Assume all site details are existing unless otherwise specified.

PROPOSED HUTCHISOD 3G EQUIPMEDT

Proposed Cabin/Cabinet Details
Hutchison Ref:- DEC DODE B
Dimensions:- 1800x800x1310 OUTDOOR CABIDET
Colour:- STADDARD

Proposed Site Access/Route
REFER TO DRAWIDG Do. 00161126-201 FOR ACCESS DETAILS

Proposed Tower Details
Height:- 15m
Type:- MODOPOLE – FRAME TYPE
Hutchison Ref:- EVE
Colour:- SELF COLOUR

Proposed Transmission Details

Do.	Size	Hgt	Type	Orientation
D1	300ø	14.85m	TBC	0°
D2	600ø	14.7m	TBC	180°
D3	600ø	14.7m	TBC	270°

(Height is measured to centre of DRL)

Proposed Antenna Details

Do.	Size	Hgt	Type	Orientation	Feeder lgth
A1	1700x142x43	13.8m	RACAL 2212	55°	19m
B1	1700x142x43	13.8m	RACAL 2212	145°	19m
C1	1700x142x43	13.8m	RACAL 2212	235°	19m

(Antenna height is measured to base of antenna)
(Feeder lengths from Cabin/Cabinet to each antenna)

Exclusion zone
H3G's Exclusion Zones comply with ICDIRP's Public Exposure limits

Fencing
TYPE 1, DORDAL SECURITY, 1800mm HIGH CHAID LIDK FEDCE ADD 3 STRADDS BARBED WIRE OD VERTICAL EXTEDSIOD POSTS, OVERALL FEDCE HEIGHT 2100mm

REV.	DATE	DESCRIPTIOD	CHK	APP

Hutchison 3G

Hutchison 3G UK Limited
Star House, 20 Grenfell Road, Maidenhead, SL6 1EH
Tel: 01628 765 000 Fax: 01628 765 001
H3G Base Station Information line: 0845 6043000
Available 8am-10pm 7 days a week.

SMITH WOOLLEY TELECOM
24 BARTON STREET
BATH
BA1 1HG
TEL: 01225 427000
FAX: 01225 463000
EMAIL: mailto@swtele.co.uk

Site: EWER PARK STUD, POUDD LADE
HURST, Dr WOKIDGHAM
BERKSHIRE
RG10

Title: SITE PLAD

Purpose of issue: PLADDIDG

Drawing no.: 00161126-202

Site ID: 00161126

Dominal ID: SL 6054

Issue: Scale: AS SHOWD Checked: MDC Date: 09/01
Drn: DLF Date: 26/09/01 Approv: PD Date: 09/01

Consultant: CAM5004H

THIS DRAWIDG IS THE PROPERTY OF HUTCHISOD 3G & MUST DOT BE COPIED, TRACED OR REPRODUCED WITHOUT THEIR WRITTED CODSEDT.

Applicationo	Name & Address
TL/2001/4653	Beryl Lambert Hodge Pound Lane Hurst Berks RG10 ORS
TL/2001/4653	J. Moore Hurst Grange Pound Lane HURST Berkshire RG10 0RS
TL/2001/4653	Dudley Barnes Hemjoy Cat and Dog Hotel Pound Lane HURST Berkshire RG10 0RS
TL/2001/4653	K.D. and P.J. Jones Pound Lane Cottage Pound Lane HURST Berkshire RG10 0RS
TL/2001/4653	B.A. Macdonald Hurst Grange Farmhouse Pound Lane HURST Berkshire RG10 0RS
Application Approved	Letters sent 08/10/01

WOKINGHAM DISTRICT COUNCIL

TOWN AND COUNTRY PLANNING ACTS

APPROVAL OF PRIOR APPROVAL OF TELECOMMUNICATIONS NOTIFICATION

Jennifer Walters
The Barton Wilmore Partnership
Beansheaf Farmhouse
Bourne Close
Calcot
Reading
RG31 7BW

Notification No: TL/2001/4653

Parish: Hurst

Proposal: Erection of one 15 metre telecommunications mast and associated equipment cabin

Location: Land to the rear of Hurst Grange and adjacent to M4, Pound Lane

The Wokingham District Council in pursuance of their powers under Part 24 of the Town and Country (General Permitted Development) (Amendment) Order 1998 **GRANTS** prior approval for the above stated telecommunications equipment, the conditions for which are specified hereunder.

Conditions:

1. No development shall take place until there has been submitted to and approved in writing by the Local Planning Authority a scheme of landscaping, which shall include indications of all existing trees and hedgerows on the land, and details of any to be retained, together with measures for their protection in the course of development; the approved landscaping scheme (with the exception of planting, seeding and turfing) shall be implemented within three months of the completion of the development hereby approved and retained.
2. All planting, seeding or turfing comprised in the approved details of landscaping shall be carried out in the first planting and seeding seasons following completion of the development; and any trees or plants which within a period of 5 years from the completion of the landscaping die, are removed or become seriously damaged or diseased shall be replaced in the next planting season with others of similar size and species.

Reasons:

1. In the interests of visual amenity.
2. In the interests of visual amenity.

Informative:

1. This permission relates to the application as amended with drawing number 00161126-101 Revision D, submitted to the Local Planing Authority on 20 September 2001, showing diameter of the headframe reduced to 800 mm, and does not approve the proposals as originally submitted.

A Cronin

Date: 2 October 2001

Anna Cronin
Head of Planning and Transportation Services

Tel: (0118) 974 6479 (Direct Line)
Fax: (0118) 974 6484
Email: Emy.Circuit@wokingham.gov.uk
Date: 2 October 2001
My ref: EXC/TL/2001/4653
Your ref: 10471/A3.6/SL6054/JW

Jennifer Walters
The Barton Wilmore Partnership
Beansheaf Farmhouse
Bourne Close
Calcot
Reading
RG31 7BW

Environmental Services Department
Planning Services
P.O. Box 157
Shute End, Wokingham
Berkshire RG40 1WR
Tel: (0118) 974 6000
Fax: (0118) 974 6484
Minicom No: (0118) 974 6991
DX: 33506 – Wokingham

Dear Ms Walters

PROPOSED ERECTION OF ONE 15 METRE TELECOMMUNICATIONS MAST AND ASSOCIATED EQUIPMENT CABIN – TL/2001/4653

Please find enclosed the decision for the above proposal. If you have any queries regarding this matter, please contact me on 0118 974 6479.

Yours sincerely

Emy Circuit,
Planning Assistant, Development Control

File: TL 4653 R O
hurst Grange &
adjacent to M4.doc

Wokingham District Council Environmental Services Department, PO Box 157, Shute End, Wokingham, Berks, RG40 1WR

FAX

Date: 2 October 2001

Number of pages including cover sheet: 4

To: Jennifer Walters

Phone:

Fax phone:

CC:

From: Emy Lincoln

Phone:

Fax phone: 0118 9746484

REMARKS: ☐ Urgent ☐ For your review ☐ Reply ASAP ☐ Please comment

TL/2001/4653

* * * COMMUNICATION RESULT REPORT (2.OCT.2001 16:18) * * *

TTI WDC PLAN&TRANSPORT

FILE MODE	OPTION	ADDRESS (GROUP)	RESULT	PAGE
338 MEMORY TX		99430002	OK	P. 4/4

REASON FOR ERROR
E-1) HANG UP OR LINE FAIL
E-2) BUSY
E-3) NO ANSWER
E-4) NO FACSIMILE CONNECTION

WORK SHEET FOR : Emy Circuit

Application Number : TL/2001/4653

Applicant : Hutchison 3G UK Ltd C/O The Barton Willmore Planning Partnership.

Location : Land To The Rear Of Hurst Grange and adjacent to M4, Pound Lane, Hurst, .

Proposal : Proposed erection of one 15 metre telecommunications mast and associated equipment cabin

Site Notice Displayed ? :

YES	NO	DATE
✓		29/8/01

Date of Neighbour Notifications : .....

Date of Site Visit : 29 August 2001

Date Registered : 22/08/2001

Earliest Date for Decision : 14/09/2001

Latest Consultation Date/Site Notice Expiry Date : 14/09/2001

This application will have expired on: 03/10/2001. You need to make a decision 1 day prior to this date for this application to count as determined in less than 8 weeks.

Consultation Responses :

Hurst PC - no adverse comments

HHT | Neighbours: will spoil views, number of children who visit area, interference with TV etc. sites further along M'way would be more suitable / health risk, eyesore,

Planning Issues :

visual impact

Amenity of neighbours.

Application Number: TL/2001/4653

Appraisal :

The site would be approximately 170 metres from the nearest building.

The field to the east of the site is open but there a number of mature trees along the boundary with Hurst Grange / Church Farm, including in the vicinity of the proposed mast and these would screen it to some extent. Additional planting is proposed & this would further screen the base of the mast and cabin. Therefore, it is considered that the mast would not be unacceptably prominent.

Recomendation : Approval: ☑ **Refusal:** ☐
(tick appropriate box)

Application Number TL/2001/4653
Conditions/Reasons for Refusal

No	Std Con	Std Reas	Non Std Conditions / Reasons for Refusal

RECORD OF SITE VISIT

SITE ADDRESS: Land To The Rear Of Hurst Grange and adjacent to M4 Pound Lane Hurst .

APPLICATION NUMBER: TL/2001/4653

OFFICER: Emy Circuit

DATE OF SITE VISIT: 29/8/01

1 SITE/STATUTORY NOTICE DISPLAYED ? applicants S/N up + orange S/N displayed on field gate, Pound Lane

2. DESCRIPTION OF SURROUNDINGS rural setting
open field between Pound Lane & M'way.

3. DESCRIPTION OF SITE/BUILDING hedge & trees screen S & E boundaries of fields

4. RELATIONSHIP TO ADJOINING PROPERTIES

5. SITE CONSTRAINTS

TREES

ACCESS/PARKING

LEVELS

BOUNDARY TREATMENT

OTHERS

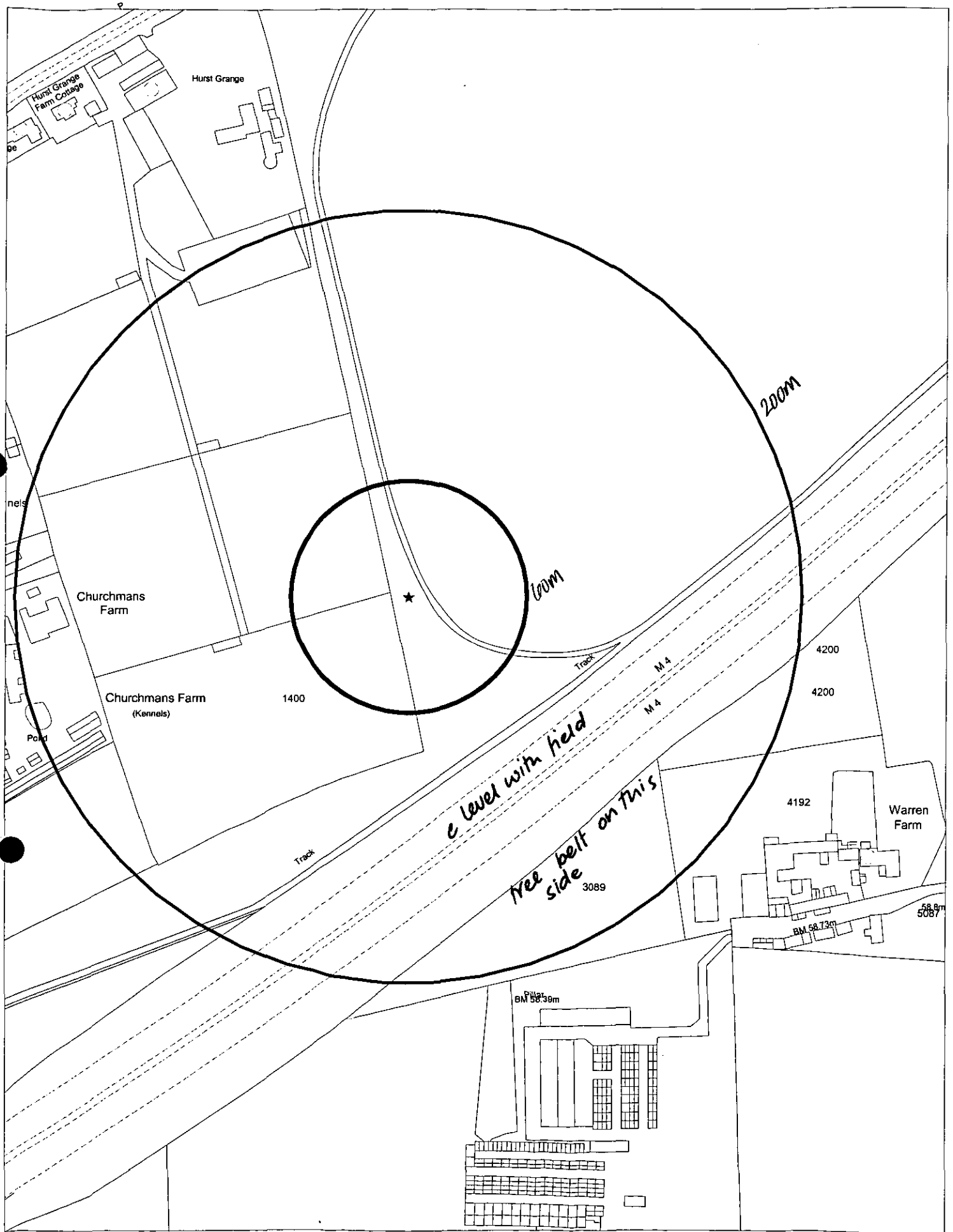

This map is based upon Ordnance Survey material with the permission of Ordnance Survey on behalf of the Controller of HMSO. © Crown Copyright. Unauthorised reproduction infringes Crown Copyright and may lead to prosecution or civil proceedings.Wokingham District Council Licence LA086134

Development Control Section, Environmental Services, Wokingham District Council.

12 September 2001 Scale: 1 : 2500

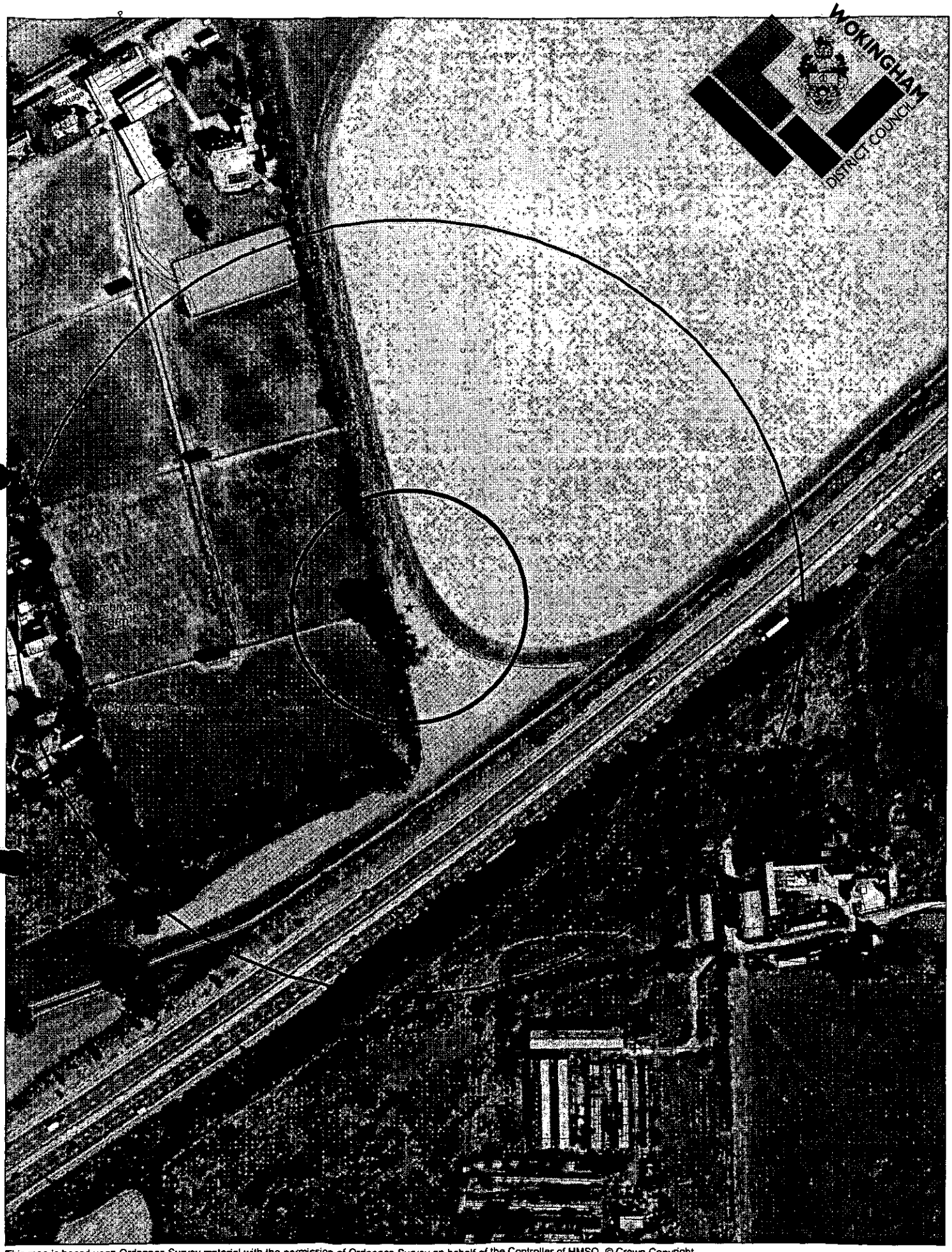

This map is based upon Ordnance Survey material with the permission of Ordnance Survey on behalf of the Controller of HMSO. © Crown Copyright.
Unauthorised reproduction infringes Crown Copyright and may lead to prosecution or civil proceedings.Wokingham District Council Licence LA086134

Development Control Section, Environmental Services, Wokingham District Council.
12 September 2001 Scale: 1 : 2500

N
W E
S

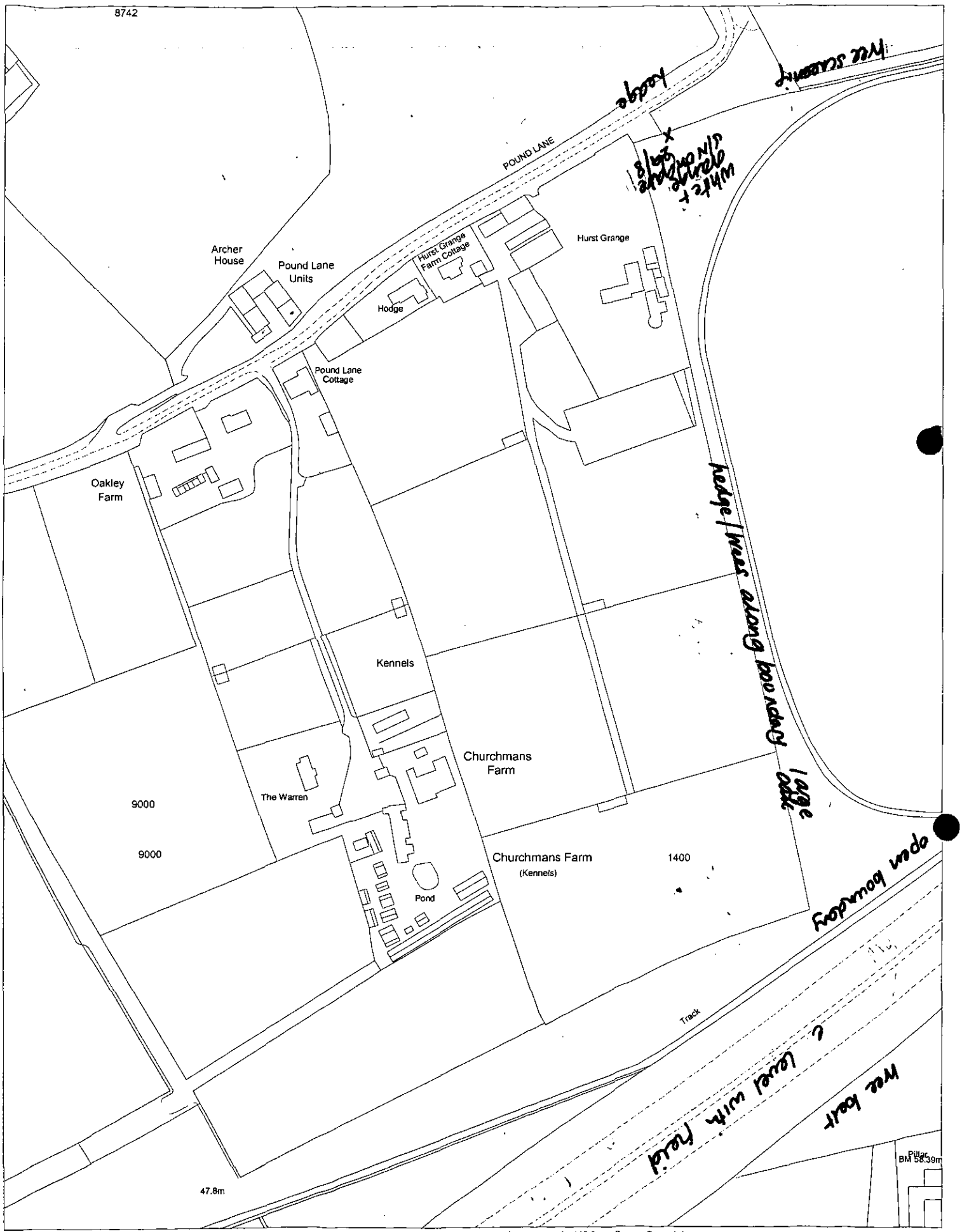

This map is based upon Ordnance Survey material with the permission of Ordnance Survey on behalf of the Controller of HMSO. © Crown Copyright.
Unauthorised reproduction infringes Crown Copyright and may lead to prosecution or civil proceedings.Wokingham District Council Licence LA086134

Development Control Section, Environmental Services, Wokingham District Council.

28 August 2001

Scale: 1 : 2500

N
W E
S

The Barton Willmore Planning Partnership - Reading
Beansheaf Farmhouse, Bourne Close, Calcot,
Reading, RG31 7BW.
Tel 0118 943 0000 Fax 0118 943 0002
e-mail: planning@reading.bartonwillmore.co.uk

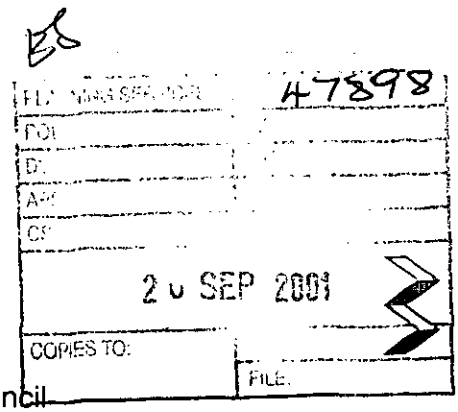

Barton Willmore
Planning

Ms. E. Circuit
Planning Services
Wokingham District Council
Civic Offices,
Shute End,
Wokingham,
Berks. RG40 1BN

10471/A3.6/SL6054/JW

19th September 2001

Dear Ms Circuit

HUTCHISON 3G UK LIMITED
PROPOSED INSTALLATION OF TELECOMMUNICATIONS BASE STATION AT EWER PARK STUD, POUND LANE, HURST
APPLICATION REF: TL/2001/4653

I write further to my telephone conversation with Mike Thorp on 19th September 2001 in respect of the above prior approval application. I advised Mr Thorp that the proposed headframe, supporting the antennae and microwave dishes, has been altered and that revised drawings have therefore been prepared. Mr Thorp confirmed that the amended drawings could be submitted under the current prior approval application.

Accordingly, please find enclosed six copies of revised drawing no. 00161126-101 Revision D, which reflects the alterations that have been made. The new headframe is more slimline that that previously proposed, and therefore has less visual impact. The antenna will now be installed on the 15m monopole at a height of 13.8 metres.

Please do not hesitate to contact me if you have any queries regarding the above or require any further information.

Yours sincerely

J. Walters

JENNIFER WALTERS
Senior Planner

Enc.

Certificate No. FS 29537

Town Planners • Environmental Consultants
Architects • Master Planners • Project Services

Contact: Gareth Capner, Ian Tant, Roger Turnbull, Mark Sitch, Angela Doone

A list of partners can be inspected here and at our associated offices in:
Bristol Cambridge Edinburgh Leeds London West Malling (Kent)

Tel: (0118) 974 6479 (Direct Line)
Fax: (0118) 974 6484
Email: Emy.Circuit@wokingham.gov.uk
Date: 12 September 2001
My ref: EXC/TL/2001/4653
Your ref: 91113

Jennifer Walters
Barton Wilmore
Beansheaf Farm House
Bourne Close
Calcot
READING
RG31 7BW

Environmental Services Department
Planning Services
P.O. Box 157
Shute End, Wokingham
Berkshire RG40 1WR
Tel: (0118) 974 6000
Fax: (0118) 974 6484
Minicom No: (0118) 974 6991
DX: 33506 – Wokingham

Dear Ms Walters

PROPOSED INSTALLATION OF ONE 15 METRE TELECOMMUNICATIONS MAST AND ASSOCIATED EQUIPMENT CABIN – TL/2001/4653

With regard to the above application, I write to inform you that the Council requires prior approval of the proposal. This is in accordance with policy WIC14 of the Wokingham District Local Plan Deposit Draft, which states that the Council will exercise its option to require prior approval on sites within 200 metres if any building regularly used by people.

Yours sincerely

M L Thorp
Principal Development Control Officer

12 SEP 2001

ST. NICHOLAS HURST PARISH COUNCIL

Clerk: Mr. R. Wardle, D.M.A., F.C.I.S., M.I.Mgt.,
Glenrocques, 52 Altwood Road, Maidenhead, Berkshire, SL6 4PZ
Telephone/Fax: (01628) 628485

11th September, 2001

Development Control Manager,
Wokingham District Council,
Planning Services,
P.O. Box 157,
Shute End,
Wokingham, RG40 1WR

For the attention of Emy Circuit

Dear Miss Circuit,

Application No. TL/2001/4653

I refer to the above-mentioned Application by Hutchison 3G UK Ltd., in respect of land to the rear of Hurst Grange and adjacent to M4, Pound Lane, Hurst: proposed erection of one 15 metre telecommunications mast and associated equipment cabin.

My Council have no adverse comments to make on the Application.

Yours sincerely,

Clerk

ES OBS

PLANNING SERVICES | HIST
POL | TLS
DC | ENF
APP |
CS |
- 4 SEP 2001
COPIES TO: | ACK
FILE
3.9.01,

Tel: 0118 9340705

Hodge
Pound Lane
Hurst
Berkshire
RG10 ORS

Application No. TL/2001/4653

Dear Emy Circuit,

Thank you for your reply to my letter dated 28.8.01.

As you have been unable to assure me on the points I listed I am now writing to register my objection to the above planning application.

I have been in consultation with my neighbours in the area and they have pointed out that as well as the previously stated comments of dangerous emission and disruption to our television service, there would be a serious change in the outlook from our properties. As we are all in a high band area for rating purposes we would then have to seek a reduction in those charges. We have been told that our rating is because of the outlook afforded to us.

The other concern is that if any of us should wish to put our property on the market it could seriously affect the current value.

I hope in considering this application you will appreciate the concerns of myself and my neighbours and propose that a new site should be found further along the motorway where there are no houses.

Yours sincerely,

Beryl L. Lambert.

BERYL L LAMBERT
ALCM.ATM(SMTC).FRSA.FinstD.

16 + M

EXC OBS

-7 SEP 2001

COPIES TO:

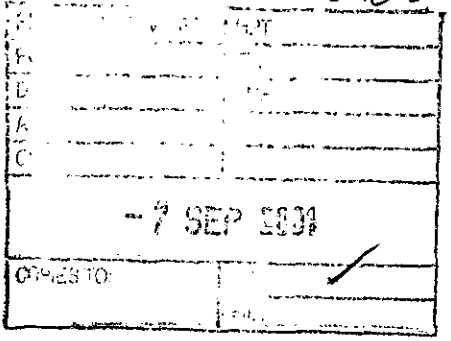

Hurst Grange Farmhouse,
Pound Lane,
Hurst.
Nr Twyford.
Berkshire.
RG10 0RS.

5.9.2001

Dear Sir/Madam,

I am writing to confirm that we are most certainly against the erection of a 15 metre telecommunications mast, at the back of Hurst Grange.

We live in the country to enjoy the natural beauty.

Yours faithfully,

S. A. Macdonald

0118 934 5132

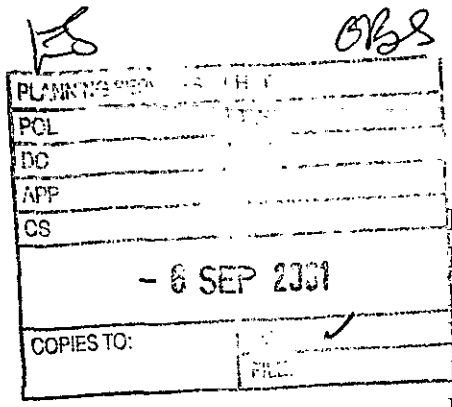

Pound Lane Cottage
Pound Lane
Hurst
Nr. Reading
Berks
RG10 0RS

Wokingham District Council
Environmental Services Department
Planning Services
P.O. Box 157
ShuteEnd
Wokingham
Berkshire
RG40 1WR

For the attention of Emy Circuit

2 September 2001

Ref: Application Number TL/2001/4653

Dear Sir/Madam

With reference to your letter of 22 August regarding the proposed erection of one 15 metre telecommunications mast and associated equipment cabin, on land to the rear of Hurst Grange and adjacent to M4, Pound Lane Hurst.

We strongly appose the application for the erection of this mast, as it will be seen from the rear of our property, and the properties along Pound Lane in that vacinity, we feel their must be other alternative suitable sites where it will not be an eyesore from any property.

Yours faithfully

K. D & P.J. Jones

Hemjoy Cat & Dog Hotel
Pound Lane
Hurst
Berkshire
RG10 ORS

ES OBS

PLANNING SERVICES	
POL	
DC	
APP	
CS	
- 4 SEP 2001	
COPIES TO:	
	FILE:

2nd Sept 2001

Your Ref: Emy Circuit TL/2001/4653

Ms E Circuit
Environment Services Dept
Planning Services
PO Box 157
Shute End
Wokingham
Berkshire
RG40 1WR

Dear Ms Circuit

My wife and I strongly object to any proposal to erect a telecommunications mast and associated equipment cabin on land to the rear of Hurst Grange and adjacent to the M4 at Pound Lane, Hurst, application Number TL/2001/4653 on at least two counts:

1. Until it has been proved that there as a 100% guarantee that there is no health risk of any form of cancer to the area from such a mast.

2. The Wokingham planning office has such stringent rules regarding building regulations in this part of Hurst; we are amazed you would even consider granting permission for an aerial of this type to be erected, as it will be an eye sore on the landscape.

This is a pretty rural area and we would like it to stay that way. This proposal would prove to be a tremendous blot on the landscape.

Yours sincerely

Dudley Barnes

Dudley Barnes

Tel:0118 9340705

Hodge
Pound Lane
Hurst
Berkshire
RG10 ORS

28.8.01.

Application No. TL/2001/4653

Dear Emy Circuit.

Thank you for your correspondence regarding the above application. I would appreciate a letter of assurance from Hutchison 3G UK Ltd. on the following points.

1, The proposed sight overlooks a small group of houses which at any one time is visited by young children. Hurst Grange is a riding and dressage establishment, with a constant stream of young people. We ourselves are constantly visited by children, Oakleigh Farm has children and so does the kennels at the top of the drive. I would like assurance that at no time would there be any danger from harmful emissions of any kind.

2. Having lived in this house for thirty four years and had perfect television reception both from terrestrial and now Sky television I would also like assurance that the erection of such a mast will in no way interfere with that.

There is much land further along the motorway which does not overlook any inhabited dwelling and perhaps a more suitable sight could yet be found.

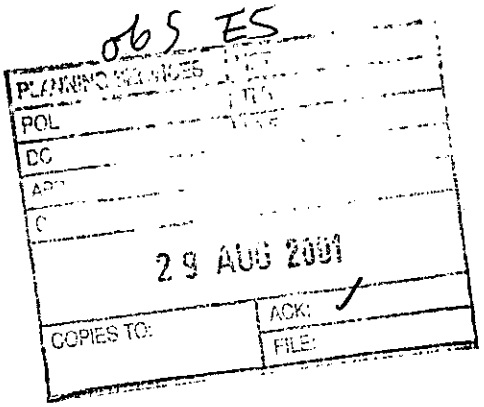

Yours sincerely,

Beryl L. Lambert.

BERYL L LAMBERT
ALCM.ATM(SMTC).EPTA. FRSA.FinstD.

EXC OBS

Tel. 0118 934 0895
Fax. 0118 934 2811
Mobile. 07836 204242
E Mail jhmoore@globalnet.co.uk

PLANNING SERVICES	HPT
CL	TLS
DC	ENF
APP	
CS	

30 AUG 2001

COPIES TO:	ACK: ✓
	FILE:

Hurst Grange
Pound Lane
Hurst
Nr. Twyford
Berkshire
R10 0RS
27/8/2001

Environmental Services Department.
Planning Services.
P.O.Box 17,
Shute End.
Wokingham.
Berks RG40 1WR.

Dear Sir/Madam.

Re Proposed telecommunication mast No TL/2001/4653.

We are sorry but we are not in favour of a mast at the rear of our property. as it will spoil our views.

Yours faithfully.

J. H. Moore

Received by Wokingham District Council

Application No: TL/2001/4653

Proposal:
Proposed erection of one 15 metre telecommunications mast and associated equipment cabin

Location:
Land To The Rear Of Hurst Grange and adjacent to M4, Pound Lane, Hurst, .

The application is available for inspection at Wokingham District Council's offices during the following times:

PLANNING DEPARTMENT, SHUTE END, WOKINGHAM TEL (0118) 974 6428
8.30 - 5.00 Monday - Thursday & 8.30 - 4.00 Friday

WOODLEY LIBRARY HEADLEY ROAD WOODLEY 9.30am - 7.00pm Mon, Thurs & Fri. 9.30am - 5.00pm Tues, 9.30am - 1.00pm Saturday and 1.00pm - 4.00pm Sunday. Library closed all day Wednesday. If you intend to view this application at Woodley Library please allow 4 days from the date of this letter for delivery of plans and remember to take this letter with you or quote application number TL/2001/4653 to enable the library staff to locate the correct information.

Comments should be sent in writing QUOTING THE APPLICATION NUMBER to the Case Officer Emy Circuit P.O. Box 157 Council Offices, Shute End, Wokingham Berkshire, RG40 1WR to arrive on or before 14/09/2001. Written comments submitted will become available for public inspection.

In view of the very large number of planning applications and letters of comment received, it will not be possible for an individual reply to be issued to observations made. However any comments will be taken into account when the application is determined and you will be notified of the decision.

Head Planning and Transportation

23 August 2001

ADDITIONAL NEIGHBOUR CONSULTATION SHEET

APPLICATION NUMBER: TL/2001/4653
CASE OFFICER: Emy Circuit

ADDRESS OF ADDITIONAL NEIGHBOUR CONSULTATION	NUMBER OF DAYS FOR RESPONSE	DATE LETTER ISSUED (for Admin use)

CONDITION MONITORING RECORD SHEET

APPLICATION NO: **TL/2001/4653**
CASE OFFICER: **Emy Circuit**
SECTION 106 AGREEMENT Yes ☐. No ☐

STAGE OF DEVELOPMENT	CONDITION NUMBER	DATE CONDITION DISCHARGED	DATE COMPLIANCE OBSERVED	DATE BREACH OBSERVED
PRIOR TO COMMENCEMENT				
COMMENCEMENT				
DURING CONSTRUCTION				
COMPLETION				

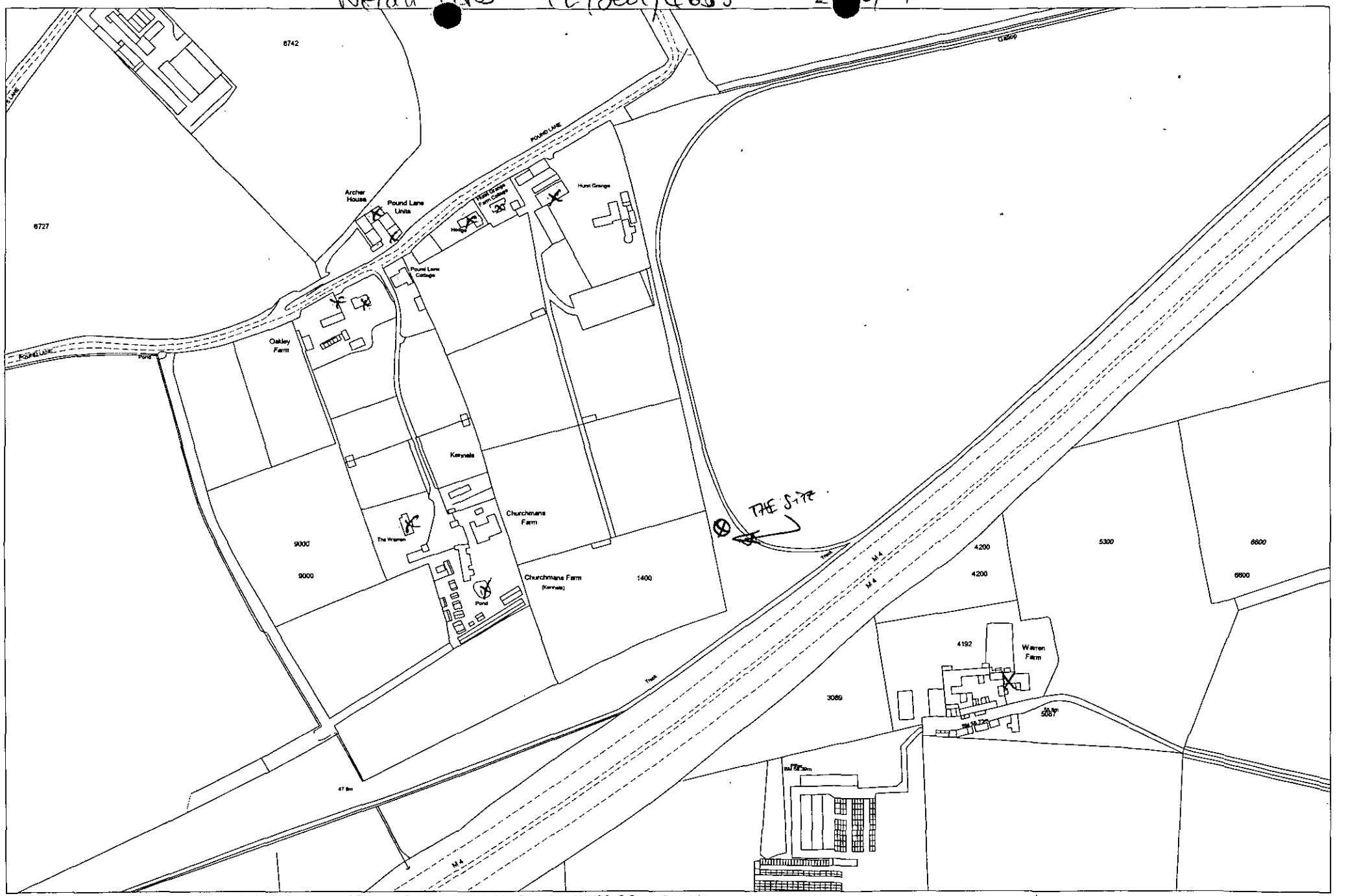

This map is based upon Ordnance Survey material with the permission of Ordnance Survey on behalf of the Controller of HMSO. © Crown Copyright.
Unauthorised reproduction infringes Crown Copyright and may lead to prosecution or civil proceedings.Wokingham District Council Licence LA086134

Central Support Section, Environmental Services, Wokingham District Council.

22 August 2001

Scale: 1 : 4000

The Barton Willmore Planning Partnership - Reading
Beansheaf Farmhouse, Bourne Close, Calcot,
Reading, RG31 7BW.
Tel 0118 943 0000 Fax 0118 943 0002
e-mail: planning@reading.bartonwillmore.co.uk

42 DAYS

TL/2001/4653

Barton Willmore
Planning

District Planning Officer
Wokingham District Council
Council Offices
P.O. Box 157
Shute End
Wokingham
RG40

RECD 22 AUG 2001

BY COURIER

10471/A3.6/SL6054/JW

FOR THE ATTENTION OF MIKE THORP

21st August 2001

Dear Sir

HUTCHISON 3G UK – PRIOR APPROVAL APPLICATION
PROPOSED DEVELOPMENT AT EWER PARK STUD, POUND LANE, HURST

We refer to the prior consultation in connection with Hutchison 3G UK Limited proposals in the District between Andrew Kelly of King Sturge and Mike Thorp of your Council. On behalf of Hutchison 3G UK, we are instructed to submit the attached application for determination as to whether prior approval of the siting and design of the proposed development is required, pursuant to Part 24 of Schedule 2 of the Town and Country Planning (General Permitted Development) Order 1995 (GPDO) (as amended).

This application comprises:

1. Five copies of drawing no. 00161126-101 which includes a site location plan, site plan, elevations and site photograph;

2. A copy of the site notice, which was posted at the site entrance on the date of this application, to remain for a period of 21 days;

3. A supporting statement by Hutchison 3G providing general background information to assist in considering the application;

4. Information in support of the planning application for the development of a base station including material relating to the type of radio equipment which would be used and information describing Hutchison 3G's network requirements;

5. Information in support of the application, including ICNIRP compliance certificate, emissions profile and plot coverage; and

6. The application fee of £35.

Certificate No. FS 20837

Town Planners • Environmental Consultants
Architects • Master Planners • Project Services

Contact: Gareth Capner, Ian Tant, Roger Turnbull, Mark Sitch, Angela Doone

A list of partners can be inspected here and at our associated offices in:
Bristol Cambridge Edinburgh Leeds London West Malling (Kent)

The application relates to the proposed construction of a telecommunication base station comprising 3 x 1700mm antennas and 2 x 600mm and 1 x 300mm microwave dishes mounted on a 15m monopole, 1 x 1.34m^3 compact cabinet, 1 x 0.79m^3 support cabinet and ancillary equipment.

Background Information

You will note from the supporting statement that the Hutchison 3G UK licence is to provide a communications system within the United Kingdom. In order to achieve this, the country is being divided into planned networks of interacting cells of various sizes; each served by a base station such as that proposed at Ewer Park Stud. In this instance, the proposed development is to service an area between Hurst and Binfield.

ICNIRP Compliance

Government guidance (Ministerial letter of 29th June, 2000 and 16th March, 2001) advises that if installations comply with ICNIRP guidelines on maximum public exposure levels with reference to electromagnetic field (EMF) emissions there is no justification for intervention in the decision making process by Planning Authorities. With regard to transmission at between 2 and 2.2 GHz, the Hutchison 3G UK frequency band, the relevant exposure levels are in the region of 38 v/m. An installation of the type proposed typically generates EMF levels of the order of 0.3 v/m in publicly accessible areas.

Government Guidance

This application is submitted within the Government planning guidance as given by Planning Policy Note 8 (PPG8). PPG8 outlines the importance of good communications to the local communities and the national economy and states that local authorities should respond positively to telecommunications development proposals, especially where the proposed location is constrained by technical considerations.

Alternative Sites

Prior to selecting this site at Ewer Park Stud, a thorough search within this call area was undertaken, such that all possible sites were considered. Sites have been considered in terms of their technical suitability to provide the required level of service and also their effect of visual amenities. The aim of site identification is to find the technically most efficient site, which has the minimum impact on visual amenities.

There were limited alternative sites within the search area due to its open character. There is a BT Cellnet site to the east, at Billingsbear Golf Club, however the land owner was reluctant for the existing structure to be redeveloped to accommodate an additional operator. The site was also too close, in coverage terms, to a proposed Hutchison 3G site at Bear Farm. A second potential alternative site was identified to the west of Ewer Park Stud, which is an existing telecommunications site operated by Orange. BT Cellnet are proposing to share this site, however, it is not an appropriate site for Hutchison 3G as it is too close to the adjacent search cell at Junction 10 of the M4.

Ewer Park Stud is therefore the most appropriate site that would achieve the required coverage.

Relationship with Development Plan Policies

Berkshire Structure Plan 1991 – 2006 (adopted 1995) seeks a balance between the growth of telecommunications development and their impact on the environment. Policy TC1 indicates that planning permission will normally be granted for telecommunication development subject to certain criteria being met to minimise the environmental impact of such development.

Policy WIC14 of the Wokingham District Local Plan (Deposit Draft) advises that prior approval applications will be considered in accordance with Local Plan Policy WOS3, which sets out development control principles which seek to ensure, inter alia, that proposals are of an appropriate scale and design. The proposed monopole is sited adjacent to existing trees, which will provide screening, and additional planting is proposed. Furthermore, the monopole will be dark green in order to minimise its visual impact.

The proposed development at Ewer Park Stud is therefore in accordance with Development Plan policy.

Conclusions

Accordingly, it is concluded that all necessary and reasonable steps have been taken to comply with the letter and spirit of Government Guidance and good land use planning practice.

We trust the information supplied is sufficient for you to consider this application favourably at your earliest convenience.

Please do not hesitate to contact us if you require any further information.

Yours sincerely

JENNIFER WALTERS
Senior Planner
For and on behalf of Hutchison 3G UK

Enc.

SITE NOTICE

Proposed development at **EWER PARK STUD, POUND LANE, HURST**

I give notice that ***HUTCHISON 3G UK LIMITED***

is applying to **WOKINGHAM DISTRICT COUNCIL**

under paragraph A.2 (4A) of Part 24 of Schedule 2 to the Town and Country Planning (General Permitted Development) Order 1995 for its determination as to whether the prior approval of the authority will be required to the siting and appearance of **A TELECOMMUNICATIONS BASE STATION COMPRISING 3 x 1700MM ANTENNAS AND 2 x 600MM AND 1 x 300MM MICROWAVE DISHES MOUNTED ON A 15M MONOPOLE, 1 x 1.34M^3 COMPACT CABINET, 1 x 0.79M^3 SUPPORT CABINET AND ANCILLARY EQUIPMENT.**

Under Part 24 of the Town and Country Planning (General Permitted Development) Order 1995, **WOKINGHAM DISTRICT COUNCIL** are allowed 42 days beginning with the date of application to consider whether prior approval will be required to the siting and appearance of the development proposed and, if so, to give or refuse such approval and to serve that decision upon the applicant.

Members of the public may inspect copies of the application and accompanying plans at **WOKINGHAM DISTRICT COUNCIL OFFICES, SHUTE END, WOKINGHAM.**

Individuals and organisations wishing to make representations about the siting and appearance of the proposed development are invited to forward their views in writing no later than **11TH SEPTEMBER 2001** to **DISTRICT PLANNING OFFICER, ENVIRONMENTAL SERVICES, WOKINGHAM DISTRICT COUNCIL, COUNCIL OFFICES, P.O. BOX 157, SHUTE END, WOKINGHAM, RG40 1WR** clearly stating that comments are being forwarded in relation to the proposed development of a ground-based mast at **EWER PARK STUD, POUND LANE, HURST (NGR 481220/172030)**

SIGNED:

ON BEHALF OF: **HUTCHISON 3G UK LTD**

DATED: **21ST AUGUST 2001**

Emissions Profile

Hutchison 3G

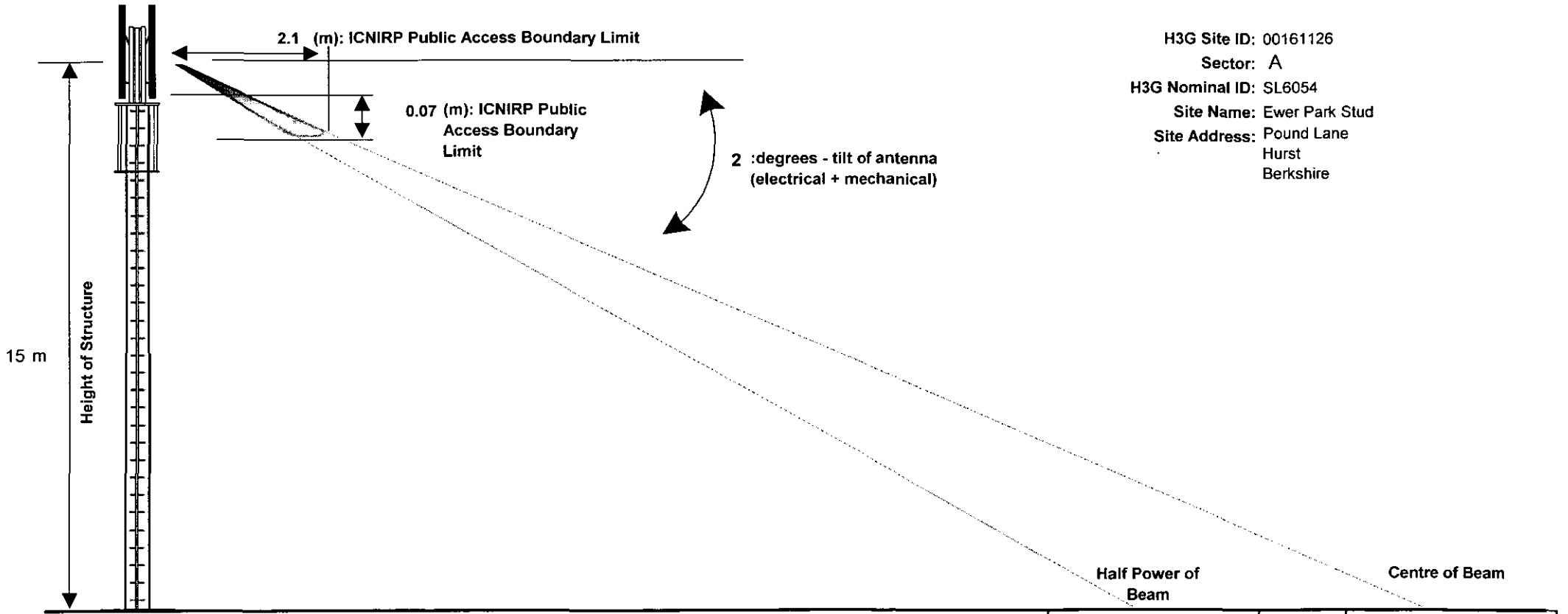

H3G Site ID: 00161126
Sector: A
H3G Nominal ID: SL6054
Site Name: Ewer Park Stud
Site Address: Pound Lane
Hurst
Berkshire

The above structure is solely used for demonstration purposes and is not intended to reflect the actual appearance of the site. The drawing is not to scale.

This theoretical model estimates the worst case emissions based on the proposed configuration. The model assumes optimum propagation and no attenuation due to trees, buildings or other obstructions. Hutchison 3G reserves the right to change this configuration for operational reasons.

The calculations have been completed in accordance with the Stewart Report guidelines [ref. 4.30-4.36].

Half Power of Beam	Centre of Beam
0.003169 W/m^2	0.001367 W/m^2
3,155 x less than ICNIRP Standard	7,314 x less than ICNIRP Standard
1.09 V/m	0.72 V/m

Emissions Profile

Hutchison 3G

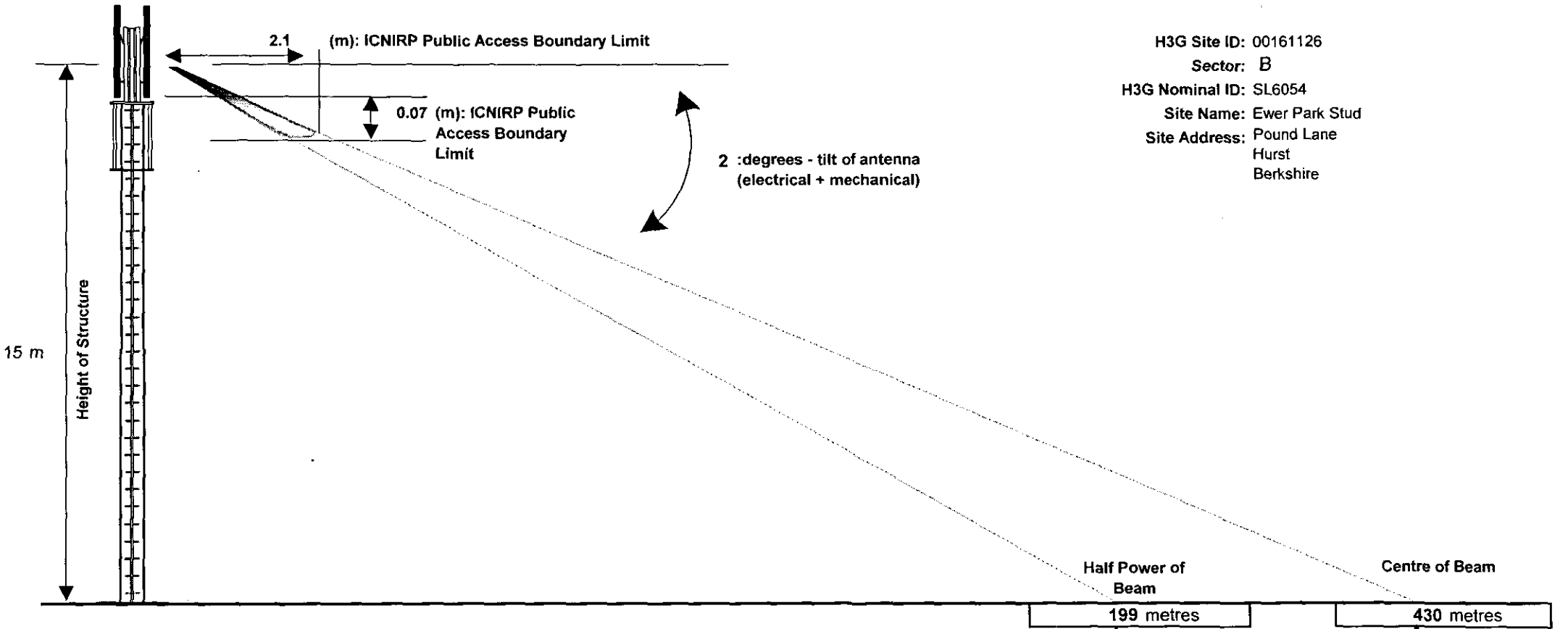

H3G Site ID: 00161126
Sector: B
H3G Nominal ID: SL6054
Site Name: Ewer Park Stud
Site Address: Pound Lane
Hurst
Berkshire

0.003169 W/m^2
3,155 x less than ICNIRP Standard
1.09 V/m

0.001367 W/m^2
7,314 x less than ICNIRP Standard
0.72 V/m

The above structure is solely used for demonstration purposes and is not intended to reflect the actual appearance of the site. The drawing is not to scale.

This theoretical model estimates the worst case emissions based on the proposed configuration. The model assumes optimum propagation and no attenuation due to trees, buildings or other obstructions. Hutchison 3G reserves the right to change this configuration for operational reasons.

The calculations have been completed in accordance with the Stewart Report guidelines [ref. 4.30-4.36].

Emissions Profile

Hutchison 3G

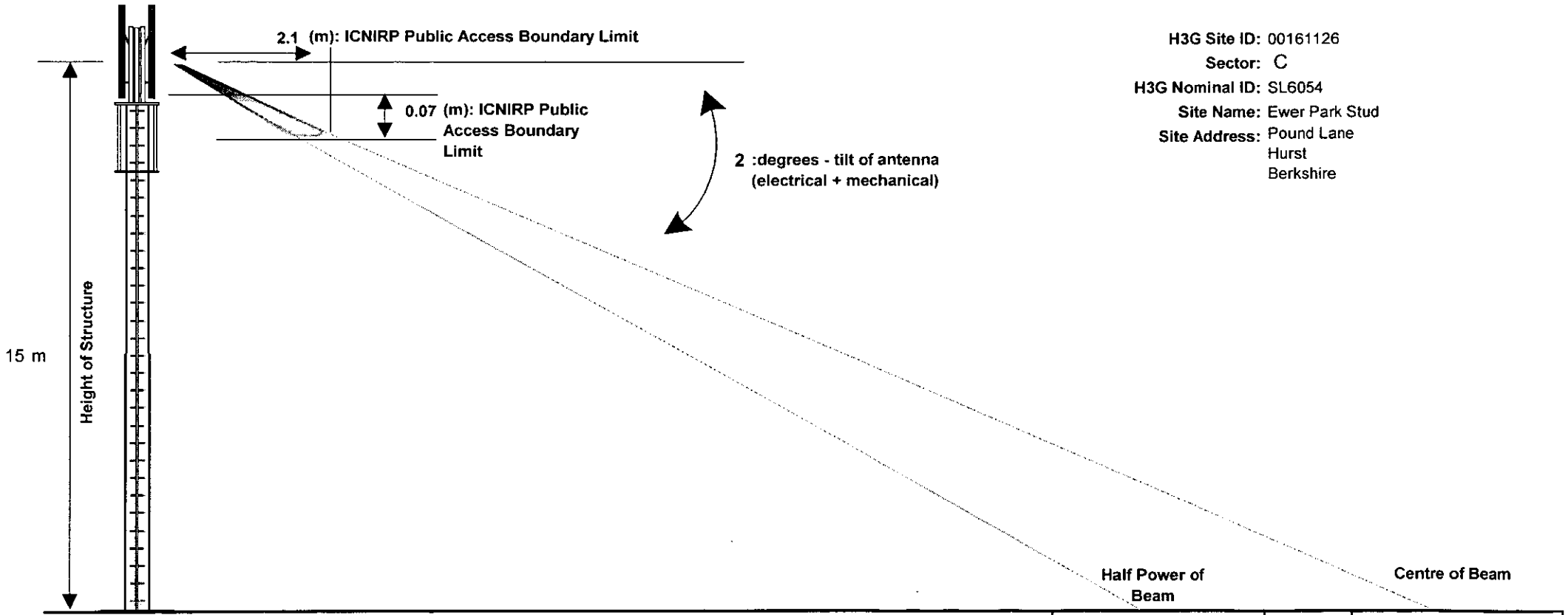

H3G Site ID: 00161126
Sector: C
H3G Nominal ID: SL6054
Site Name: Ewer Park Stud
Site Address: Pound Lane
Hurst
Berkshire

0.003169 W/m²
3,155 x less than ICNIRP Standard
1.09 V/m

0.001367 W/m²
7,314 x less than ICNIRP Standard
0.72 V/m

The above structure is solely used for demonstration purposes and is not intended to reflect the actual appearance of the site. The drawing is not to scale.

This theoretical model estimates the worst case emissions based on the proposed configuration. The model assumes optimum propagation and no attenuation due to trees, buildings or other obstructions. Hutchison 3G reserves the right to change this configuration for operational reasons.

The calculations have been completed in accordance with the Stewart Report guidelines [ref. 4.30-4.36].

Hutchison 3G

Declaration of Conformity with ICNIRP Public Exposure Guidelines ("ICNIRP Declaration")

Hutchison 3G UK
Star House,
20 Grenfell Road
Maidenhead
SL6 1EH

Certifies that the proposed equipment and installation as detailed in the attached planning / GPDO application at:

Ewer Park Stud
Pound Lane,
Hurst,
Berkshire

Site ID **SL6054**
Nominal ID **00161126**

Drawing No *00161126-101*
Version No *Revision B*

is designed to be in full compliance with the requirements of the radio frequency (RF) public exposure guidelines of the International Commission on Non-Ionising Radiation Protection (ICNIRP), as expressed in EU Council recommendation of 12 July 1999 * "on the limitation of exposure of the general public to electromagnetic fields (0 Hz to 300 GHz)".

* Reference: 1999/519/EC

Date: 21/8/01

Signed: .....

Name: TAK CHANG KHOO

Position: Lead RF Planner

SUPPORTING STATEMENT

This document has been produced in order to assist Local Planning Authorities in determining planning applications and notifications under the General Permitted Development Order (GPDO) for telecommunications development made on behalf of Hutchison 3G UK.

Whilst submitted as general background information to assist the determining of planning applications and GPDO notifications, the document does not constitute a formal part of any application and is not meant as a substitute for ongoing discussion on any specific proposal. Instead, the document is submitted as a complimentary aid to that process.

1.0 Who are Hutchison 3G UK

Hutchison 3G UK (H3G) were awarded one of the third generation mobile licences by the Department of Trade and Industry to run a public telecommunications service in the UK. Hutchison Whampoa, NTT DoCoMo and KPN own H3G. It is now investing in deploying a network for a potential launch in 2002. Hutchison 3G UK is required by the terms of our license to meet a coverage level of 80% of the UK population by 2007.

The licence permits allows us to operate at a frequency of 2.1 GHz

1920.0 – 1934.9 MHz – Base receive
2110.3 – 2124.9 MHz – Base transmit
1914.9 – 1920.0 MHz – Base transmit/receive in Time Division Duplex

2.0 Why the need for a new telecommunications service?

Firstly, mobile phone usage has grown exponentially and far in excess of that estimated.

Secondly and importantly for a 3rd Generation operator the introduction of technological developments will allow faster data transfer, direct access to the Internet from the handset and allow the use of videophones. It is anticipated that there will be a increase in data related traffic for video, pictures, text and other digital information and that the demand for this type of communication will increase the demand for mobile technology and the associated communications infrastructure.

Hutchison 3G UK aims to be in the vanguard in the roll out of 3rd Generation technology across Europe.

3.0 THE SITE SELECTION PROCESS

H3G's site selection strategy until launch is to keep our overall environmental impact to a minimum. The key to this will be for H3G to site share wherever we possibly can. To this end we will target:

- Existing telecommunications structures
- Buildings or rooftops
- Other useable utility based structures such as electricity pylons

New Greenfield or Brownfield sites will only be developed where there are no viable or accessible alternatives or it is the planning authority's preferred approach.

H3G have developed a number of agreements with providers of telecommunications infrastructure or companies with infrastructure that might be suitable for development to a telecommunications use. When the search area has been identified the Network Planning Engineer together with the Planning and Acquisition Consultants will use these agreements to identify possible sites. Within the search area, priority is being given to using pylon sites where possible to minimise any visual impact.

The Acquisition Consultant will then contact the building / land owners for the identified site and arrange a site visit. The Acquisition Consultant will provide the Network Planning Engineer with a Search Report, which will show the possible locations and access for the equipment. The search report includes a set of panoramic photographs from the possible antenna heights (illustrating for instance any obstructions that will effect the coverage from the site).

The Engineer will use the coverage prediction tool to make sure the identified site will provide the required coverage levels. Should the results be satisfactory the Engineer will then produce an initial design, which is used by the professional designer to produce detailed drawings of the installation. These drawings are agreed with the site provider and are used a part of the planning application.

As part of the process, the Transmission Engineer will make sure that the new sites can be networked into the existing network using microwave or leased line transmission links.

4.0 COVERAGE LEVELS AND TYPICAL CELL SIZE

The combination of the significantly faster data rates, the need to reduce interference within and between cells and the lower power output from 3G equipment means that the typical cell size for 3G is smaller than that generally associated with 2G.

5.0 SITE SEARCH

In accordance with our Licence obligations and PPG8, H3G's Network Planner, Acquisition and Planning Consultants will have undertaken an inspection of the area of search and investigated the following in order of preference:

- Using an existing telecommunications structure belonging to another communications operator,
- Existing high building or other structure, including National Grid pylons
- A new site on brownfield land
- A new Greenfield site

6.0 PRE-ROLLOUT DISCUSSIONS

Under the Licence granted to H3G by the Government it is a condition that pre-rollout discussions are held with the local authority. Hutchison 3G UK is committed to carrying out a comprehensive pre – rollout programme.

7.0 THE LEGISLATIVE FRAMEWORK

7.1 Introduction

As a company operating in the UK, H3G is bound by all relevant territorial and European legislation. Particularly relevant to network development are the requirements and obligations flowing from three separate areas of legislation.

- Telecommunications
- Planning
- Health and Safety

7.2 Telecommunications

H3G is a licensed telecommunications code systems operator under the Telecommunications Act 1984. The current Licence was granted on 22nd December 2000 by the Secretary of State for Trade and Industry

The minimum network coverage requirement is specified in the Licence as being an area of where 80% of the UK population live by 2007.

7.3Planning

7.3.1 General Permitted Development Order

As a licensed telecommunications code systems operator, H3G enjoys certain permitted development rights as set out in Part 24 Schedule 2 of the Town and Country Planning (General Permitted Development) Order 1995, as amended (GPDO). The rights are accompanied by a Code of Best Practice published by the Department of the Environment in March 1996 and DETR Circular 04/99, Planning For Telecommunications.

7.3.2 Planning Applications

Where development exceeds the limits set out in the GPDO or relates to areas where permitted development rights do not apply, then H3G is subject to the usual requirement for planning permission, requiring the submission of a planning application in the first instance. Any such application is subject to the normal statutory procedures and an important material consideration in its determination will be the guidance set out in PPG8, as well as the relevant policies in the development plan.

If planning permission is granted, the Company will fully comply with all relevant Health and Safety legislation.

7.3.3 Planning Policy Guidance 8 – Telecommunications

Planning Policy Guidance 8 of 1992 (PPG8) and Circular 4/99 seek to encourage modern telecommunications for their economic and social benefits and for their contribution to reducing the necessity to travel (Paragraph 2).

The Government's general policy on telecommunications is to facilitate the growth of new and existing systems (Paragraph 5).

Local Authorities should not question the need for the service, which proposed development is to provide, nor seek to prevent competition between different operators (Paragraph 6).

7.4 Health and Safety Concerns

Health and Safety legislation covers a range of matters including safety during construction, structural stability and requirements to ensure proper and safe maintenance, as well as issues relating to radio frequency.

7.4.1 **Draft Planning Policy Guidance 8**

When applications are made queries, are sometimes raised about public safety owing to concerns about radio frequency. That is also a matter subject to separate health and safety legislation. Ensuring compliance with the relevant guidelines is the responsibility of Government through the Health and Safety Executive and the National Radiological Board. Paragraph 74 states:

'It is not for the local planning authority to seek to replicate through the planning system controls under the health and safety regime. Enforcement of health and safety legislation in this matter for the Health and Safety Executive and not the Local Planning Authority'

Para 78 sets out the information that the Operators should provide with any application:

- Confirmation that the site meets ICNIRP guidelines
- Height of the antenna
- The frequency and modulation characteristics
- Details of power output

Para 78 also states:

' It is the Government's view that if a proposed development meets the ICNIRP guidelines as expressed by the EU Council Recommendation of 12 July 1999 on the limitation of exposure of the general public to electromagnetic fields, it should not be necessary for an authority in processing an application, to consider health effects further.'

7.1.2The Stewart Report

The Independent Expert Group on Mobile Phones (IEGMP), chaired by Sir William Stewart, was established in April 1999 on instruction of the Minister for Public Health and their report (The Stewart report) was published on 11th May. The report was based on the issues and concerns relating to the 2 generation rollout of a mobile phone network, however many of the conclusions and recommendations are relevant to and offer valuable lessons to the 3rd generation rollout.

Having heard and considered a large amount and wide range of evidence the main conclusions were as follows:

- The balance of evidence to date does not suggest that emissions from mobile phones and base stations put the health of the UK population

at risk. However, given the gaps in our knowledge a precautionary approach to the use of mobile phone technologies is recommended.

- The balance of evidence indicates that there is no general risk to the health of people living near to base stations on the basis that exposures are expected to be small fractions of guidelines. The report does, however, identify a number of indirect adverse effects primarily relating to impacts on local amenity.

- A recommendation that planning controls be extended to masts below 15m in height

- A call for the random auditing of the emissions base stations particularly near schools and sensitive sites

- That a substantial research programme should be instituted under the aegis of an independent panel

7.4.3 The Government's Response

The Government' response to recommendations in the Stewart report includes acceptance of the more stringent International Commission on Non-Ionising Radiation Protection (ICNIRP) standard for public exposure.

The Government has issued a policy statement regarding the future planning legislation relating to Telecommunications. They have stated that the prior approval procedure will remain, but the time period will be extended to 56 days and consultation will be extended to replicate full planning.

Letter to Council Leaders in England and English MP's (29 June 2000) – issued by Nick Raynsford MP: Minister for Housing and Planning DETR

This letter offered clear guidance from the Government that pending changes to the planning regime, Local Planning Authorities should continue to deal with planning applications for telecommunications *'on the basis of the current legislative arrangements and policy guidance'.* It continues by stating that a unilateral ban or moratorium on mobile phone applications is 'wholly unjustified'.

Furthermore, it advises *'if a proposed development meets the ICNIRP guidelines (as recommended by Stewart on a precautionary basis), it should not be necessary for a planning authority, in processing an application, to consider the health effects further'.*

Letter to Councillors in England (16 March 2001) – issued by Nick Raynsford MP: Minister for Housing and Planning DETR

This outlined the proposed changes to planning legislation and the background thereto. The main changes are:

- *Strengthen public consultation requirements on mast proposals of 15m and below so that they are exactly the same as applications for planning permission*
- *Increase the time for authorities to deal with prior approval applications to 56 days*
- *Increase application fees to enable local authorities to carry out full public consultation*
- *Underline that school governors must be consulted on all proposals for new masts on or near a school or college*
- *Maintain in full an authority's ability to reject applications on amenity grounds*

In addition it reiterated previous guidance that the governments view was that the planning system is not the appropriate mechanism for dealing with health and safety issues and if the site meets the INCIRP guidelines it should not be necessary of the local planning authority to consider health aspects further.

7.4.4 World Heath Organisation (WHO) Report – JULY 2000

The WHO has updated its fact sheet No 193, Electromagnetic Fields and Public Health. It urges regulatory authorities *'not to undermine the science base of (health based) guidelines'* by incorporating *'arbitrary additional safety factors'*. The fact sheet also states that the ICNIRP guidelines ' offer protection against all identified hazards of RF energy with large safety margins'.

The fact sheet concludes *'RH fields levels around base stations are not considered a health risk'*.

7.4.5 Appeal Decisions

Tanridge District Council and One to One Personal Communications Limited verses Mohamed Al Fayed (1999)
The High Court decision made clear that refusal on harm to health grounds would not be sustainable.

Orange Personal Communications Ltd against Restormel Borough Council 2000

Although the appeal closed after the publication of the Stewart report (11th May 2000) further representations were invited and the decision takes these into account. It is in effect the first appeal decision after the Stewart report was published.

One of the conclusions stated was ' *The IEGMP conclusion still remains one that echoes previous expert views from national and international advisory organisations, i.e. that on the balance of evidence the health of the general public will not be harmed by emissions from base stations. No other matter raised outweighs my conclusion that the evidence presented by possible health impacts does not amount to the substantial risk of harm that I consider would be necessary to outweigh the local and national policy background and the social and economic benefits of providing for modern communications.*

7.4.6 Emerging Policy Guidance for England and Wales– Draft PPG8

Although this is currently in draft form and consequently should be accorded an appropriate weighting it shows clearly future policies.

The relevant paragraphs are 63 – 81

Paragraph 72 sets out the Government's response to the Stewart report including the acceptance of the recommendation relating to adopting the INCIRP guideline for public exposure.

Paragraph 73 sets out the responsibilities of the operators under health and safety legislation.

Paragraph 74 states:
'*It is not for the local planning authority to seek to replicate through the planning system controls under the health and safety regime. Enforcement of health and safety legislation in this area is a matter for the Heath and Safety Executive (HSE) and not the local planning authority'.*

The public perception is dealt with in paragraphs 77 – 80.

Paragraph 77
Health considerations and public concern can in principal be material consideration in determining applications for planning permission and prior approval. Whether such matters are material in a particular case is ultimately a matter for the courts. It is for the decision-maker (usually the local planning authority) to determine what weight to attach to such considerations in any particular case.

Paragraph 78
In deciding what weight to put on health consideration and public concerns authorities are advised to have regard to the Stewart Group's report and to the guidance in this PPG. It is the Government's view that if a proposed development meets the ICNIRP guidelines..... *it should not be necessary for an authority, in processing an application to consider health effects further.*

Paragraph 79
Local authorities are advised not to place undue weight on the findings of individual research projects in determining applications for, or in proximity to telecommunications apparatus. The IEGMP conducted a comprehensive review or relevant research as part of its review and this helped to form its conclusions and recommendations.

Paragraph 80
Authorities may receive representations on health grounds about alleged impact of proposed telecommunications development on property values. PPG1 notes that it is not for the planning system to protect the private in interests of one person against activities of another.

Paragraph 81 Precautionary Approach
The report does not provide any basis for precautionary actions beyond those already proposed. In the Government's view, local-planning authorities should not implement their own precautionary policies e.g. by way of imposing a ban or moratorium on new telecommunications development or insisting on minimum distances between new telecommunications development and existing development.

8 COMPLIANCE WITH ICNIRP

Hutchison 3G UK have welcomed the recommendation that base station sites should comply with the INCIRP guidelines for public exposure and we believe this will increase public confidence in the safety of transmitter sites.

As stated above the Department of Environment, Transport and the Regions have issued guidance to the local authorities stating that if a new telecommunication site meets the ICNIRP guidelines then it is not necessary for the Planning Authority in processing an application to consider the health effects further.

H3G can confirm that all the proposed sites will comply with Health and Safety legislation and in particular the ICNIRP guidelines.

All applications will be supported by information relating to ICNIRP compliance including an ICNIRP compliance certificate.

9 BENEFITS

Government policy as indicated in PPG8 is to encourage modern telecommunications as being as essential and beneficial element in the lie of the local community and in the national economy and of benefiting the environment through reducing the need to travel. Although not mutually exclusive or exhaustive, an illustration of common benefits is set out below under three categories:

- Local benefits
- Contribution to sustainability
- Contribution to the national economy

9.3 Local Benefits

The majority of the UK population now have access to a mobile phone. This has clear economic and social benefits in terms of access to emergency services, improved personal safety, accessibility to services and customers, avoidance of delay, and generally enhanced communications.

9.4 **Contribution to Sustainability**

Mobile communications includes messaging, faxes and data transference (via the use of modems and computers) and accessibility to them is changing the way, in which we live and work. The next generation of services will link these with video and television services. At it's simplest, the creation of local job opportunities and full or part time home working, facilitated through access to modern communications help can significantly reduce the need to travel. Likewise, being in constant communication can avoid wasted journeys or make the best use of public transport- for instance accessing real time information on the arrival of the next bus or train.

At its most complex, mobile communications facilitates modern forms of working such as hot desking or even hot officing , so reducing and in some cases eliminating the need for office accommodation. As these modern working practices gain greater hold so the demand for office accommodation and the need to travel to and from these locations will change In addition, by reducing the number of commuters, the pressure on all forms of transport and the consequential road congestion often experienced during peak hours should be reduced, leading to clear environmental benefits.

9.5 **Contribution to the National Economy**

All businesses, from large to small, benefit from modern communications, which helps them, maintain and attract new business and service contracts in a responsive and competitive manner.

In addition, telecommunications is an increasingly important sector of the economy in its own right. It currently represents 3% of GDP and

the network operators employ over 213,000 people. There are more than 32 million telephone exchange lines and in addition, some 40 million mobile phone subscribers. Information supplied by the Department of Trade and Industry indicates that the mobile phone industry is a major contributor to economic activity in the UK and that many of our telecommunications based companies are world leaders. The Network operators had an estimated combined turnover of some £5.8 billion in the financial year 1998/1999.

There are numerous companies, which specialise in the manufacture of telecommunications equipment from handset to radio masts and sophisticated electronic equipment. Examples of companies with substantial operations in the UK include Nokia and Motorola.

There are also now many people involved in the sale of mobile communications equipment, often operating from dedicated high street shops.

Accessibility to modern communications, reductions in the price of calls and customer comfort in using the telephone has also seen the spawning of a range of products and services being sold by way of direct marketing, such as telephone banking and insurance. In turn, this has seen the development of a large number of call centres, some employing several hundred people, to the benefit of the particular local economies where they are situated.

The Government has, as one of its core objective making the UK the best place in the world to do business electronically by 2002. Initiatives such as the Information Age are proofs of the Government's commitment in this area recognising the role of the communication sector plays as fundamental bedrock for successful business.

Hutchison 3G Engineering Documentation
Radio Design Group

Hutchison 3G UMTS Radio Characteristics

Hutchison 3g

Author	Kassir Hussain
Approved by	
Date	
Title	*Hutchison 3G UMTS Radio Characteristics*
Summary	
Document no.	

Table of contents

1 Introduction 4

2 Operational Aspects 4
2.1 Spectrum Allocation 4
2.2 The technology standards 5
2.3 Licence and operating conditions 5
2.4 Vendor equipment 7
2.5 Antenna Specifications 7

3 Annex 1: Antenna specifications 8
3.1

CSAWireless
A TriPoint Global Company

"Freedom" UMTS 65°/17.5 dBi X-Pol Antenna

Model No UMTX65-12-*

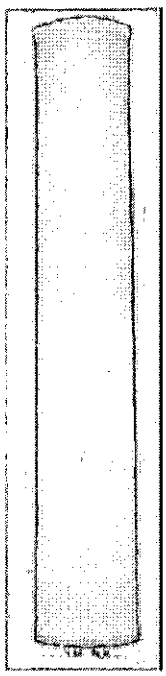

Frequency	1900 to 2170 MHz
Gain	17.5 dBi
Input Impedance	50 ohms
VSWR	< 1.4:1
Polarisation	±45°
Electrical downtilt	0°, 2°,4°
Inter-port isolation	> 30dB
Azimuth beamwidth	65°
Elevation beamwidth	7.5°
1st upper sidelobe	< -14 dB
1st Null	> -25 dB
Front to back ratio	> 30 dB
Intermodulation	< -153 dBc for 2 x 20 W carriers
Input power	2 x 125 W
Input connector	7/16 -DIN female, 2 connectors at the bottom
Temperature	-40°C to +60°C
Mounting interface	Wall or pole 2 – 4.5 in diameter (48 – 115 mm), c/w pan & tilt
Survival wind speed	200 km/h
Wind loads	Front: 180 N (at 150 km/h) Back: 270 N (at 150 km/h) Side: 115 N (at 150km/h)
Weight	Antenna 3.5 kg Bracket 3 kg
Dimensions	1270 x 184 x 82mm

Mounting bracket required: TBA

Typical Radiation Patterns

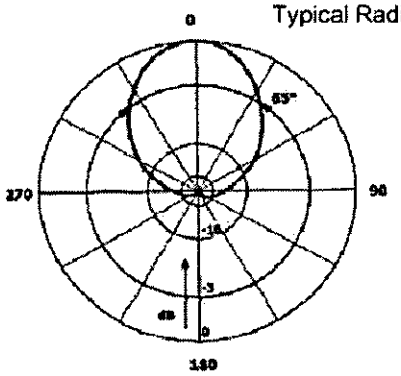

Azimuth Pattern

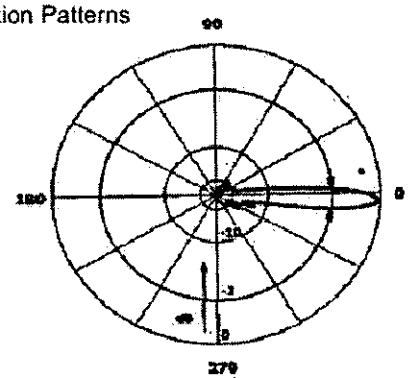

Elevation Pattern

Radiation patterns available from the CSA Website in all the software planning tools
Visit http://www.csa-wireless.com

CSA Limited, Knight Road, Rochester, Kent, England ME2 2AX.
Tel +44 (0)1634 715544 Fax +44 (0)11634 715742 e-mail sales@csauk.com
Americas office: Conover NC Tel (001) 828 466 0421 Fax (001) 828 4660413 e-mail

2000 CSA reserves the right to modify or change the specifications shown above

3.2 Thales 10

1 Introduction

This document contains the operational characteristics of the Hutchison 3G UMTS network in the United Kingdom.

Hutchison 3G UK was one of the successful bidders in the UK 3rd generation spectrum auctions and acquired a licence to operate a UMTS network in the UK spectrum auctions held last year. Hutchison 3G was the winner of licence block A. The licence awarded to Hutchison 3G allows Hutchison 3G to become a Public Land Mobile Operator.

The full definition of the UK licence and other characteristics related to the radio network are presented in the following subsections of this document.

2 Operational Aspects

2.1 Spectrum Allocation

Hutchison 3G has acquired the A licence block. The licence provides Hutchison 3G with the following spectrum:

1920.0 – 1934.9 MHz – Base receive

2110.3 – 2124.9 MHz – Base transmit

1914.9 – 1920.0 MHz – Base transmit/receive in Time Division Duplex

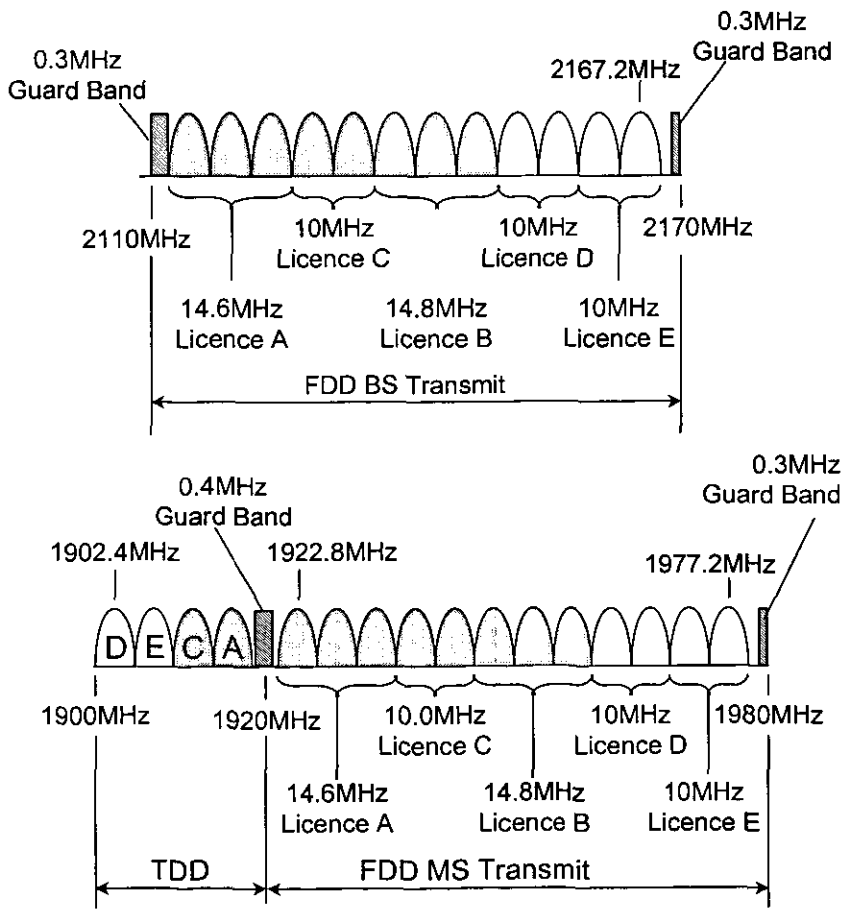

2.2 The technology standards

The 3rd generation mobile system to be operated by Hutchison 3G in the United Kingdom is based on the Global 3GPP (3rd Generation Partnership Project) standard and is commonly referred to as the Universal Mobile Telecommunications System, or UMTS. 3GPP have created the radio standards for two modes of operation for UMTS. These are:

- Time Division Duplex (TDD) mode
- Frequency Division Duplex (FDD) mode

Hutchison 3G will only operate FDD mode of UMTS for the first few years. At some later date, TDD mode of operation will be introduced.

The FDD technology is based on a Direct Sequence Code Division Multiple Access (DS-CDMA) and typically operates over a 5MHz bandwidth. Due to the wide bandwidth of the system the system is often referred to as Wideband CDMA or WCDMA.

The modulation scheme employed in WCDMA is QPSK, Quadrature Phase Shift Keying.

Parameter	Value
Technology	Direct Sequence Code Division Multiple Access (DS-CDMA)
Modulation scheme	Quadrature Phase Shift Keying (QPSK)
System bandwidth	4.4 – 5 MHz, 200kHz carrier raster
Chipping rate	3.84 Mchips

2.3 Licence and operating conditions

The Third Generation Mobile licence, was awarded by the Radiocommunications Agency, and is covered by the Wireless Telegraphy Acts of 1949 and 1998. The WTA Licence places certain operational characteristics on the constraints on the licence holder. The table below outlines key aspects of this licence.

<table>
<tr><th>Licence clause</th><th>Definition of clause</th></tr>
<tr><td>(3). Approved standards for the radio equipment</td><td>The radio equipment shall comply with the requirements of Directive 99/5/EC (the "Radio Equipment and Telecommunications Terminal Equipment Directive").</td></tr>
<tr><td>(6) Frequency bands of operation</td><td>1920.0 – 1934.9 MHz – Base receive

2110.3 – 2124.9 MHz – Base transmit

1914.9 – 1920.0 MHz – Base transmit/receive in Time Division Duplex</td></tr>
<tr><td>(7a) Maximum permissible EiRP, Frequency division duplex (FDD)</td><td>The radio equipment in Frequency Division Duplex mode, is required to conform to the following EIRP limits:

<table><tr><td>Maximum EIRP per carrier[1]</td><td>Maximum EIRP per MHz[2]</td></tr><tr><td>62 dBm</td><td>58 dBm/Hz</td></tr></table></td></tr>
<tr><td>(7b) Maximum permissible EiRP, Time division duplex (TDD)</td><td>The radio equipment in Time Division Duplex mode, is required to conform to the following EIRP limits:

<table><tr><td>Maximum EIRP per carrier[1]</td><td>Maximum EIRP per MHz[2]</td></tr><tr><td>62 dBm</td><td>58 dBm/Hz</td></tr></table></td></tr>
<tr><td>(8a) Permissible out of block emissions, Frequency division duplex (FDD). [3]</td><td><table><tr><td>Offset from edge of block</td><td>Maximum permitted level</td><td>Measurement bandwidth</td></tr><tr><td>0 to 0.2 MHz</td><td>-14 dBm</td><td>30 kHz</td></tr><tr><td>0.2 to 1.0 MHz</td><td>-14 – 15(Δf – 0.2) dBm</td><td>30 kHz</td></tr><tr><td>1.0 to 10 MHz</td><td>-13 dBm</td><td>1.0 MHz</td></tr><tr><td>Beyond 10 MHz</td><td>-30 dBm</td><td>1.0 MHz</td></tr></table>
Note Δf is the offset from the edge of the frequency block in MHz</td></tr>
<tr><td>Relevant radio standards for operation</td><td>ETSI TS 125.104: UTRA (BS) FDD; Radio transmission and reception

ETSI TS 125.105: UTRA (BS) TDD; Radio transmission and reception</td></tr>
<tr><td></td><td></td></tr>
</table>

[1] The maximum EIRP (Effective isotropic radiated power) per carrier is the product of the power supplied to the antenna and the antenna gain in a given direction relative to an isotropic antenna. The maximum EIRP in any direction from the basestation will be below this limit for any transmitted carrier. Power for this limit is defined as the mean modulated carrier power time averaged over any suitable time period in which the transmitter is continuously transmitting at its maximum operational power level.

[2] The maximum EIRP per MHz is defined as the sum of the EIRP radiated by the transmitted carriers in any given direction within any contiguous 5MHz block within an operator's spectrum allocation divided by five.

[3] The out of block emissions are defined as the radio frequency emissions generated by the system operated by the licensee but radiated into the spectrum adjacent to the licencee's frequency block.

Note, that the EIRP per carrier and the EIRP per MHz limits are considered separately for any deployment and the more stringent requirement is complied with.

The spectrum allocation provided to Hutchison 3G allows Hutchison 3G to deploy a maximum of three FDD carriers and a single TDD carrier.

2.4 Vendor equipment

Hutchison 3G will use radio equipment from two manufacturers, NEC and Nokia. NEC equipment is utilised mainly in the South East of the UK and Nokia in the North.

2.5 Antenna Specifications

The antennas intended for use by Hutchison 3G are from Thales and CSA. Hutchison 3G has measured the performance of the antenna from both suppliers rather than relying on data from the suppliers themselves. The antennas used are shown in Table 1.

Supplier	Antenna description
Thales	1.32 and 1.56 metre antennas
CSA	1.27 and 1.72 metre antennas.

Table 1. Hutchison 3G antenna

The Thales antenna is predominantly used in the Hutchison 3G network, however at some point, CSA antennas may also be used. Specifications from both antenna vendors are provided for completeness. The antenna specifications for the Thales and CSA antenna are provided in .

3 Annex 1: Antenna specifications

3.1 CSA

CSA Wireless™
A TriPoint Global Company

"Freedom" UMTS 65°/17.5 dBi X-Pol Antenna

Model No UMTX65-12-*

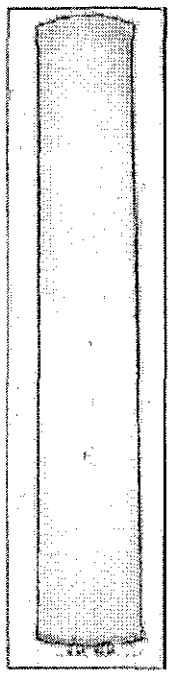

Frequency	1900 to 2170 MHz
Gain	17.5 dBi
Input Impedance	50 ohms
VSWR	< 1.4:1
Polarisation	±45°
Electrical downtilt	0°, 2°,4°
Inter-port isolation	> 30dB
Azimuth beamwidth	65°
Elevation beamwidth	7.5°
1st upper sidelobe	< -14 dB
1st Null	> -25 dB
Front to back ratio	> 30 dB
Intermodulation	< -153 dBc for 2 x 20 W carriers
Input power	2 x 125 W
Input connector	7/16 -DIN female, 2 connectors at the bottom
Temperature	-40°C to +60°C
Mounting interface	Wall or pole 2 – 4.5 in diameter (48 – 115 mm), c/w pan & tilt
Survival wind speed	200 km/h
Wind loads	Front: 180 N (at 150 km/h) Back: 270 N (at 150 km/h) Side: 115 N (at 150km/h)
Weight	Antenna 3.5 kg Bracket 3 kg
Dimensions	1270 x 184 x 82mm

Mounting bracket required: TBA

Typical Radiation Patterns

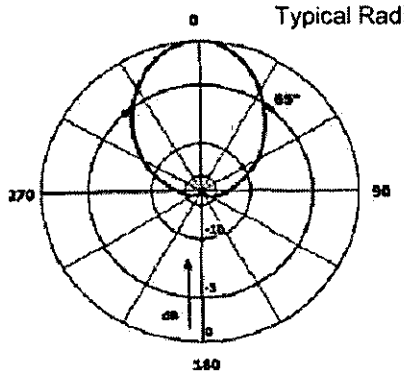

Azimuth Pattern

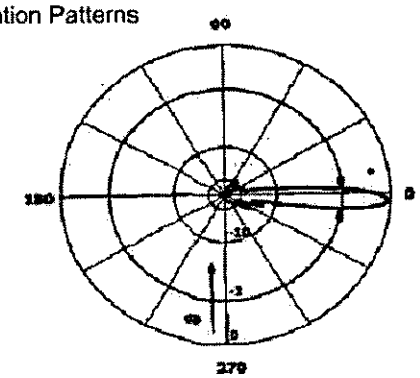

Elevation Pattern

Radiation patterns available from the CSA Website in all the software planning tools
Visit http://www.csa-wireless.com

CSA Limited, Knight Road, Rochester, Kent, England ME2 2AX.
Tel +44 (0)1634 715544 Fax +44 (0)11634 715742 e-mail sales@csauk.com
Americas office: Conover NC Tel (001) 828 466 0421 Fax (001) 828 4660413 e-mail

2000 CSA reserves the right to modify or change the specifications shown above

CSAWireless

"Freedom" UMTS 65°/18.5dBi X-Pol Antenna

Model No UMTX65-17-*

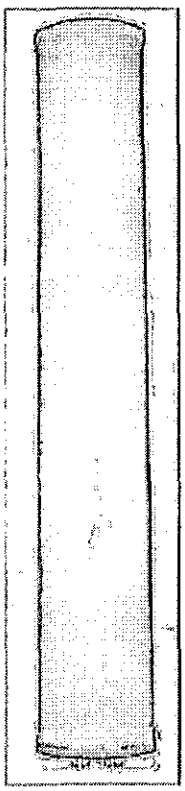

Frequency	1900 - 2170 MHz
Gain	18.5 dBi
Input Impedance	50 ohms
VSWR	< 1.4:1
Polarisation	±45°
Electrical downtilt	Various options available on request
Inter-port isolation	> 30dB in Tx, > 27dB in Rx
Azimuth beamwidth	65°
Elevation beamwidth	5°
1st upper sidelobe	< -16 dB
1st Null	> -25 dB
Front to back ratio	> 30 dB
Intermodulation	< -153 dBc for 2 x 20 W carriers
Input power	2 x 125 W
Input connector	7/16 - DIN female, 2 connectors at the bottom
Temperature	-40°C to +60°C
Mounting interface	Wall or pole 2 – 4.5 in diameter (48 – 115 mm), c/w pan & tilt
Survival wind speed	200 km/h
Wind loads	Front: 400N at 150 km/h Back: 430N at 150 km/h Side: 165N at 150 km/h
Weight	Antenna 5 kg Bracket 3 kg
Dimensions	1720 x 184 x 82

Mounting bracket required: XSL54256

Typical Radiation Patterns

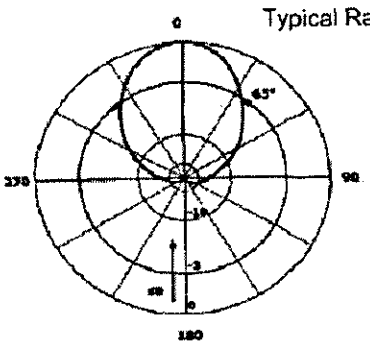

Azimuth Pattern

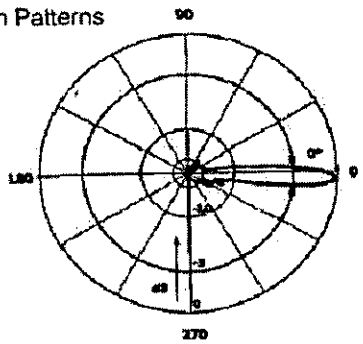

Elevation Pattern

Radiation patterns available from the CSA Website in all the software planning tools
Visit http://www.csa-wireless.com

CSA Limited, Knight Road, Rochester, Kent, England ME2 2AX.
Tel +44 (0)1634 715544 Fax +44 (0)11634 715742 e-mail sales@csauk.com
Americas office: Conover NC Tel (001) 828 466 0421 Fax (001) 828 4660413 e-mail

2000 CSA reserves the right to modify or change the specifications shown above

3.2 Thales

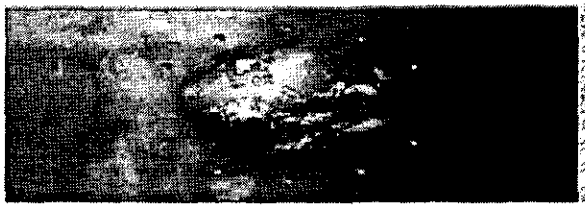

UMTS
65°/18 dBi
DUAL-POLARISED
ANTENNA

Dual Polarised Antenna
Type: 2209

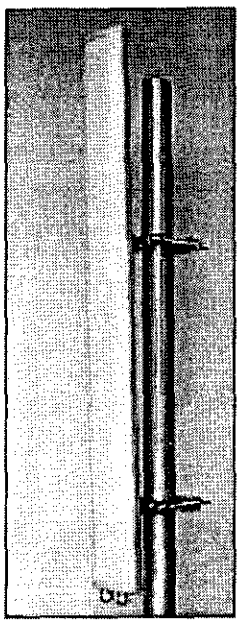

- **SINGLE-BAND 3G APPLICATIONS**
- **ULTRA LOW-PROFILE RADOME**
- **SIDELOBE SUPPRESSION**

The '3G Series' of panel antennas from Racal have been designed to easily facilitate the installation of Third Generation Cellular infrastructure into new or existing networks. A number of models provide variations in both gain and fixed electrical downtilt to exactly suit the required cell coverage. Slimline radomes reduce visual impact & provide an easily installed, robust enclosure. An extremely low component count and one-piece PCB result in consistently high product quality and reliability, having an excellent intermodulation performance. The mounting brackets enable Tilt or Pan + Tilt options. Two connectors are provided on the base of the unit.

TECHNICAL SPECIFICATION

MODEL 2209

Frequency	:	1900 - 2170 MHz
Horizontal Beamwidth	:	65°
Vertical Beamwidth	:	7°
Gain	:	18 dBi
VSWR	:	1.2:1 typical
Fixed electrical downtilt options	:	2, 4, 6, 8 or 10°
Upper sidelobe suppression	:	< 18 dB
Below horizon null-fill	:	1st null <18 dB below beam peak
Isolation	:	30dB typical
Front-to-back ratio	:	>30 dB @ ± 180° azimuth
Power handling	:	200 Watts
Connectors	:	2 x 7/16" DIN (socket at bottom)
Dimensions	:	1315 mm x 142 mm x 43 mm
Operational wind speed	:	45 m/s (160 Km/h)
Survival wind speed	:	56 m/s (200 Km/h)
Max wind loading (Front)	:	268 N @ 45m/s
Weight	:	4.2 Kg
Temperature Range	:	- 40°C to + 70°C
Bracket Options	:	Tilt only ± 8° Pan (± 30°) & Tilt (8° down 2° up)

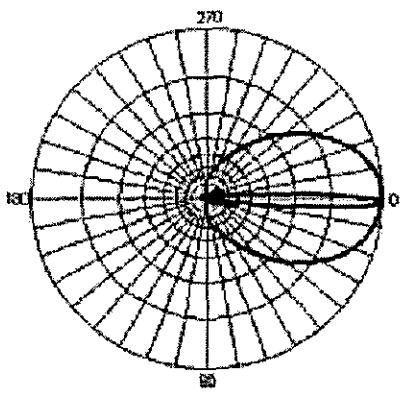

RACAL ANTENNAS
Telephone: +44 (0) 23 8070 5705 Fax: +44 (0) 23 8070 1122 e-mail: sales@racal-antennas.co.uk http://www.racal-antennas.com/
Racal reserve the right to vary in detail from the description and specification in this publication - 11/00 issue 1

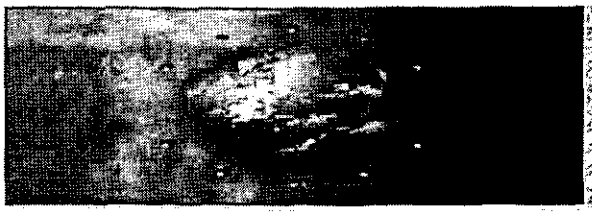

UMTS 65°/18.5 dBi DUAL-POLARISED ANTENNA

Dual Polarised Antenna Type: 2212

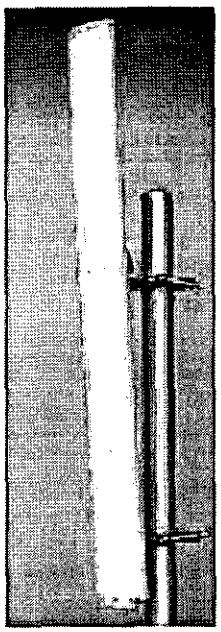

- SINGLE-BAND 3G APPLICATIONS
- ULTRA LOW-PROFILE RADOME
- SIDELOBE SUPPRESSION

The '3G Series' of panel antennas from Racal have been designed to easily facilitate the installation of Third Generation Cellular infrastructure into new or existing networks. A number of models provide variations in both gain and fixed electrical downtilt to exactly suit the required cell coverage. Slimline radomes reduce visual impact & provide an easily installed, robust enclosure. An extremely low component count and one-piece PCB result in consistently high product quality and reliability, having an excellent intermodulation performance. The mounting brackets enable Tilt or Pan + Tilt options. Two connectors are provided on the base of the unit.

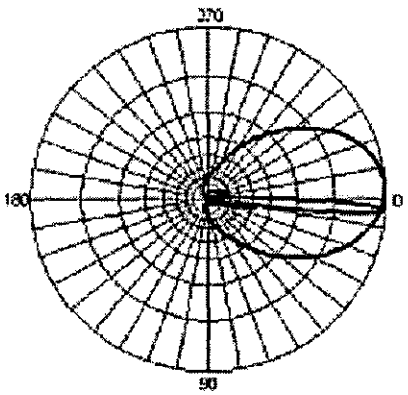

TECHNICAL SPECIFICATION

MODEL 2211

Frequency	:	1900 - 2170 MHz
Horizontal Beamwidth	:	65°
Vertical Beamwidth	:	5.3°
Gain	:	18.6 dBi
VSWR	:	1.4:1 max
Fixed electrical downtilt options	:	2, 4, 6, 8 or 10°
Upper sidelobe suppression	:	< 18 dB
Below horizon null-fill	:	1st null <18 dB below beam peak
Isolation	:	30dB typical
Front-to-back ratio	:	>30 dB @ ± 180° azimuth
Power handling	:	200 Watts
Connectors	:	2 x 7/16" DIN (socket at bottom)
Dimensions	:	1682 mm x 142 mm x 43 mm
Operational wind speed	:	45 m/s (160 Km/h)
Survival wind speed	:	56 m/s (200 Km/h)
Max wind loading (Front)	:	359 N @ 45m/s
Weight	:	5.5 Kg
Temperature Range	:	- 40°C to + 70°C
Bracket Options	:	Tilt only ± 8° Pan (± 30°) & Tilt (8° down 2° up)

RACAL ANTENNAS
Telephone: +44 (0) 23 8070 5705 Fax: +44 (0) 23 8070 1122 e-mail: sales@racal-antennas.co.uk http://www.racal-antennas.com/

Racal reserve the right to vary in detail from the description and specification in this publication 12/00 Issue 1

1 Brief Description of UMTS / WCDMA

IMT-2000 [International Mobile Telephony], UMTS [Universal Mobile Telecommunications System] and WCDMA [Wideband Code Division Multiply Access] are three of the more widely known acronyms used when discussing the new Third Generation (3G) mobile telephony. The IMT-2000 was the governing body established to develop the standards. UMTS was an umbrella organization seeking to harmonize the different standards and WCDMA was indeed one those standards.

The technology, on which this WCDMA standard is based, has been in use for decades. Through extensive coding and sophisticated modulation techniques CDMA allows a relatively low transmission power and the successful deciphering of data received at signal levels below the noise floor.

In effect, each user transmits on the same frequency and at the same time as all other users. In a conventional sense, they all interfere with each other. However, different users are distinguished by speading their signal/data across a wide frequency band and according to a unique code, known only to the transmitter and the intended receiver, thus the term "wideband code division".

1.1 The "Cocktail Party Analogy"

1.1.1 How it works:

If you were in a room full of people and each couple was engaged in a conversation using a different language, the conversation you maintain with your partner can be considered a communication link. The fact that only the two of you share the same language within the room can be thought of as a special code.

Whilst communicating with your partner all other conversations within the room are "filtered" out. Other conversations are perceived as noise. In the same way one can "focus" one's attention upon a single conversation, CDMA can decipher out a single user from a noisy background via special coding techniques. The main difference is that the sophisticated coding used in the UMTS Standards affords the noise to be "louder" than the intended voice or technically speaking, the noise level to be greater than the received signal strength.

For a GSM system, the receive level signal strength usually needs to be 18 dB stronger than the interference. In comparison, WCDMA can decipher out the intended user even if the noise or interference is more than 3 dB stronger. That is a difference of 21dB or WCDMA requires 128 times less energy relative to the interference than GSM.

1.1.2 The output power:

The power transmitted at a single UMTS site is relative to what is needed. Continuing with the aforementioned analogy, in a crowded room one does not need to speak louder than the cumulative background noise to hold one's conversation with another if one is "reasonably" close to the recipient. In fact, when very close to the other person, say within inches of the other's ear, one could whisper and still be heard intelligently. However conversely, the greater

the distance between people wishing to communicate the louder one needs to "shout" to overcome the noise.

Generally, the same relation holds true within a WCDMA system. The closer one is, in metres, to the base station the lower the radiated output power at the mobile. Or in technical terms, the base station sites with small radii and low heights will generally have a higher probability of low output power at the mobile and base station when compared to a similar location with the same traffic density and a larger cell radii.

A comparison of maximum output power can be made with a typical second generation system (2G) such as GSM1800. GSM1800 (i.e. Orange and One2One) are very close along the radio spectrum to UMTS, less than 50MHz separate their downlink (or base station frequencies) from the UMTS uplink (or mobile frequencies). Thus, the propagation characteristics and signal losses within the different environments are similar. The maximum power of a typical GSM1800 mobile unit is 30 dBm or approximately 1 Watt whereas, a typical UMTS mobile is limited to a maximum of 125 milliwatts of power for voice communication or $1/8^{th}$ the output power of a GSM1800 mobile. This difference of maximum output power reflects the strength of the coding and error correction contained within the UMTS Standard, thus resulting in much lower radiation of output power at the mobile.

1.1.3 Power control:

Very sophisticated algorithms at the mobile and base station manage the power control within a WCDMA system. Returning to the "Cocktail Party Analogy"; as more people enter the room the noise rises and correspondingly one needs to speak louder (or transmit at a higher power) in order to maintain an intelligible conversation. WCDMA base stations and mobiles use only enough power so to be "received" and deciphered intelligibly. In fact, because power is always a limited resource, WCDMA "seeks" to limit and reduce the output power as much as possible

Unlike at a cocktail party there will never be the occasional "loudmouth"; i.e. someone who enters the room and speaks at a volume much greater than that which is needed, thus requiring everyone else to raise their voices. If you like, the power control algorithms function as a sort of monitor that goes throughout the room and carefully manages the volume of each and every conversation so that every single person within the room is communicating at the minimum required level.

Again, a comparison can be made with GSM as a frame of reference. The GSM specifications do allow dynamic control[1] of the output power mobile and base station. However, their algorithms allow the adjustment of power at a frequency of only 2Hz or twice a second (this was considered very quick at the time the specifications were written). Whereas, WCDMA will have a power control algorithm that manages the power at an expected rate of 1500 Hz or 1500 times a second. Obviously, the management of transmitted power with WCDMA is very fast in comparison. The algorithms seek to always minimize the output power whenever and

[1] Dynamic power control is the ajustment or change of transmitted power by the network. The network exerts the control by minimizing the power of the mobile to the smallest viable level.

wherever possible, thus as a result making the system inherently safer to the public relative to cumulative transmitted power emitted by the mobile.

1.2 The cell site radius:

In the aforementioned analogy, the noise is repeatedly mentioned and constantly alluded to as a significant issue in WCDMA system. In fact, it ***is*** the defining issue relative to the quality of service and the system capacity. Continuing with the analogy, there are two defining characteristics relative to the cumulative noise level at a cocktail party (assuming the monitor controls and minimizes the voice level of everyone): the size of the room and the number of people within it. Assuming a rather large room with much space, as more and more people enter the noise level becomes greater and greater. At a determinable point the ability to communicate for most people will decrease.

Again the two determining factors were the size of the room and the number of people within it. It is reasonable to assume that it is possible to reduce the cumulative noise by limiting both determining factors: A) to limit the number of people admitted to the room (i.e. reduce the number of mobiles connected to the base station) and more preferably: B) by limiting the size of the room (i.e. reducing the base station coverage area).

Let's continue with the analogy and assume that there is a very large room with only two people within it. If they are at separate ends of the room they will need to shout in order to communicate. Within a WCDMA system most base stations will share a common frequency. The noise contributed by an adjacent base station on another is similar to having a Chinese wall separating your cocktail party from that of your neighbour's. Even if there are only two of you within the room, by being in separate ends of a large room and shouting, you will be causing significant noise to your neighbour and thus affecting the quality of the conversations there. Remember, the maximum transmit power at the base station will be relative to the maximum link loss and/or distance to the mobile.

Another limiting factor that reduces the maximum coverage area of a WCDMA base station is the power available at the mobile. In comparison to GSM1800 the maximum output power at a WCDMA mobile is much less. The GSM1800 mobile has a maximum output power of 1 Watt. The WCDMA mobile has a maximum output power for voice communications of 125 milliwatts, this is $1/8^{th}$ than that of a GSM1800 mobile.

As we can see from these examples, the coverage areas for WCDMA base stations will need to be smaller than the traditional telecommunication sites (GSM). The smaller coverage area will reduce the probability of noise within the system and minimize the output power of both the base stations and mobiles. It is for this reason that Hutchison 3G wishes to keep the base station coverage areas small and as close to the traffic centres as feasibly possible.

2 Frequencies

The IMT-2000 framework group had identified the following frequencies for WCDMA: 1920 - 1980 MHz uplink (mobile phones); 2110- 2170 MHz downlink (base stations) as well as 1900 - 1920 MHz and 2020 - 2025 MHz band that will be used by both the uplink and downlink.

3 Modulation / Transmission Characteristics

The UMTS/WCDMA modulation scheme is QPSK modulation [Quadrature Phase Shift Keying]. In the uplink direction [from the mobile] the two dedicated physical channels are not time multiplexed but I/Q code multiplexed, please see figure 1. The result is an I/Q code multiplexed channel with continuous channel where no pulsed transmission occurs. The power output, however, will vary as the data is switched on and off. But, it is suffice to say that such switching happens quite seldom and that the variation is small in comparison to the two dedicated control channels.

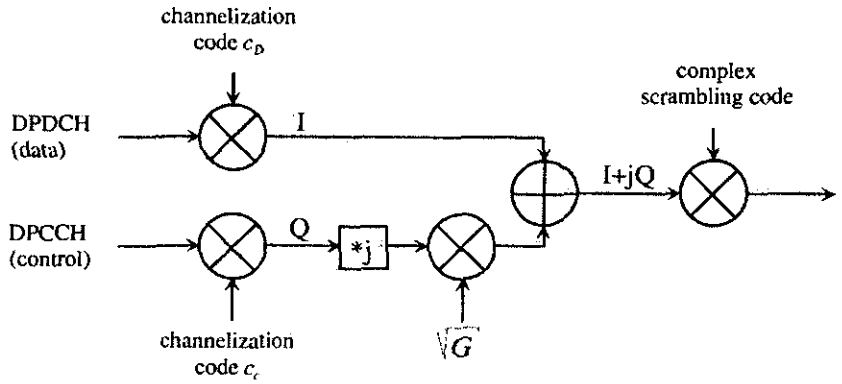

figure 1.

4 Safety Guidelines

4.1 ICNIRP / NRPB Guidelines

- Near Field / Occupational Limitations
- Far-Field / General Public Exposure Limitations

4.2 Procedures for Compliance

- Typical Radio Emissions from WCDMA sites (i.e. typical RF channel & a wide RF spectrum graph both with and without typical loading)
- Typical site sketches showing exclusion zones for occupational and general public access

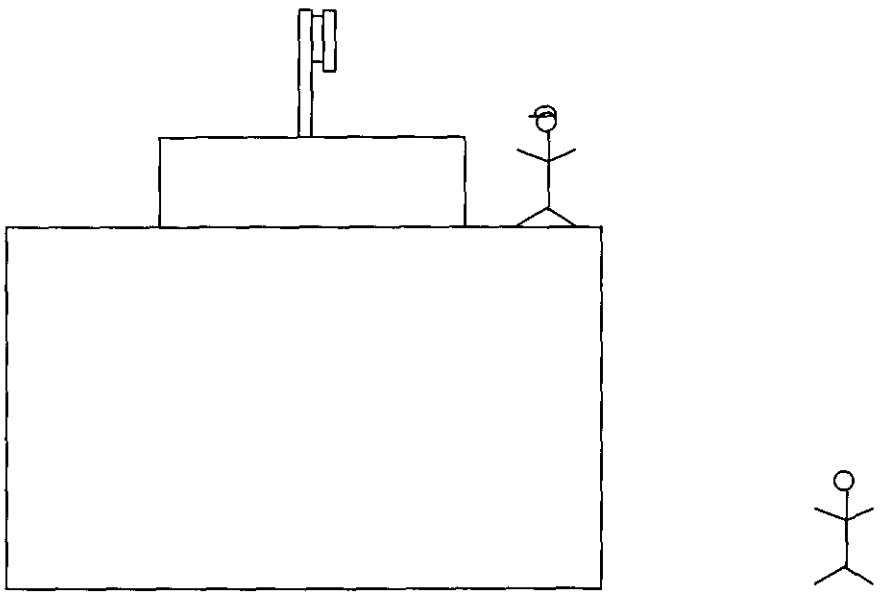

4.3 Testing Procedures

- Scope of Testing
- Equipment
- Documentation

5 Deliverables for Planning Applications

It is proposed that all relative information is to be made available for all relative planning applications. A list of available information is as follows:

The following plot shows the coverage potential from a given site location. The plot includes an assumption of traffic and a particular service type. Radiation Centre Height of Transmission Antennas Coverage Potential Plot Frequencies output power Modulation / Transmission Characteristics

Planning Application

Site ID _____
Option Nam _____

Site Coordinates
Latitude: _____
Longitude: _____

Height of A: 10.00
Frequency: 2.1 Ghz
Transmit Power: _____

Site Address

Post Code _____

Modulation Technique

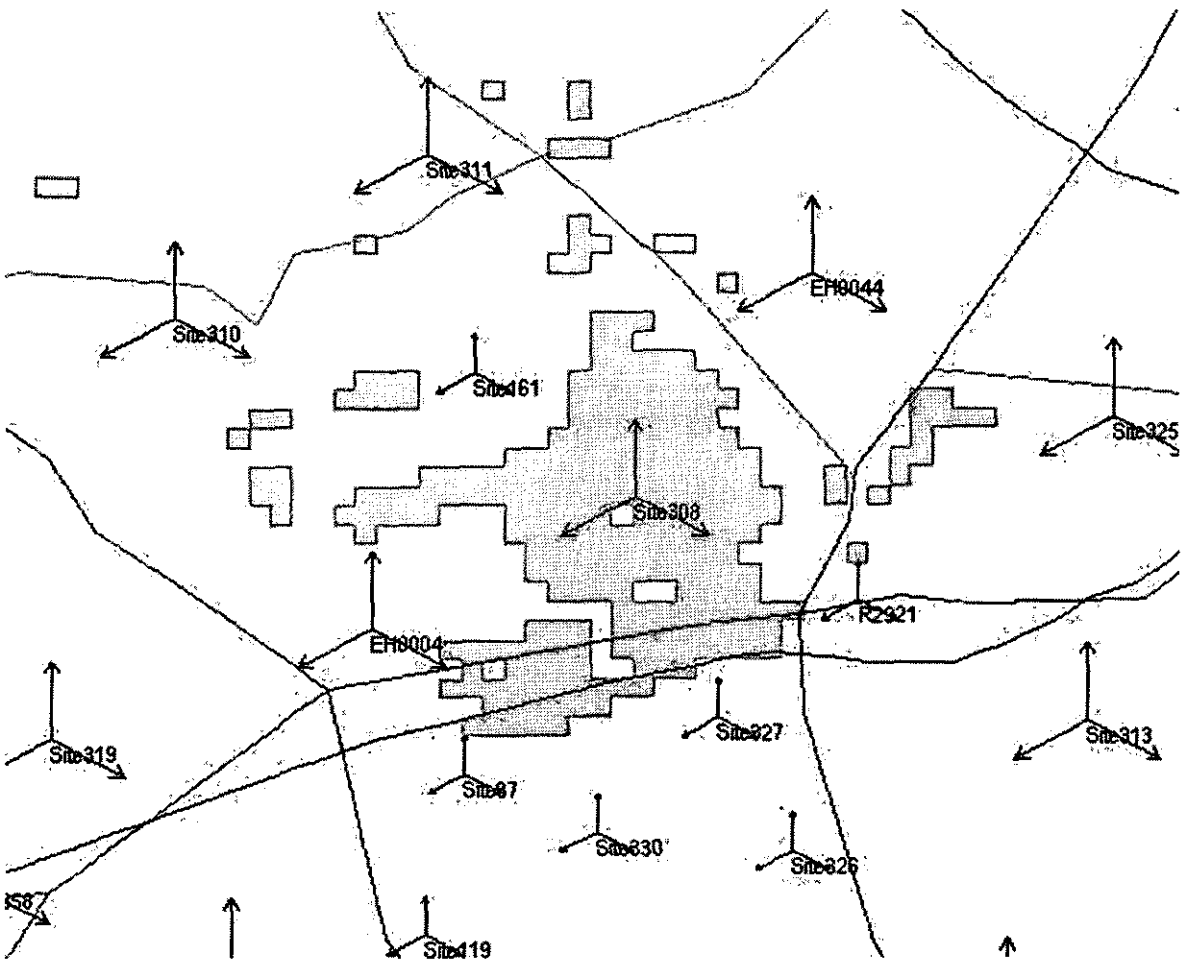

6 Epidemiological Studies

- Hutchison 3G Supported Research
- Bibliography of Known Non-Ionisation Research

6.1.1 *Books Published Jointly with ICNIRP*

Non-thermal effects of RF electromagnetic fields. R Matthes, JBernhardt and MH Repacholi (eds) Proceedings of Munich meeting, Nov. 1996. ICNIRP Pub. 3/97.

Biological effects of static and ELF fields. R Matthes, JBernhardt and MH Repacholi (eds) Proceedings of Bologna meeting, June 1997. ICNIRP Pub. 4/97.

Risk perception, risk communication and its application to EMF exposure. R Matthes, J Bernhardt and MH Repacholi (eds) Proceedings of Vienna meeting, Oct. 1997. ICNIRP Pub. 5/98.

Health Effects of Electromagnetic Fields in the Frequency Range 300 Hz to 10 MHz. R Matthes, E van Rongen and MH Repacholi (eds) Proceedings of International Meeting, Maastricht, The Netherlands 7-8 June 1999. ICNIRP Pub 8/99.

Effects of Electromagnetic Fields on the Living Environment. R Matthes, JH Bernhardt and MH Repacholi (eds). Proceedings of International Seminar, Ismaning, Germany 4-5 October 1999. ICNIRP Pub 10/2000.

Proceedings of RF meeting in Erice, Sicily being prepared for publication by ICNIRP

Available from:

ICNIRP Scientific Secretary
Bundesamt für Strahlenschutz
Institut für Strahlenhygiene
Ingolstädter Landstraße 1
D-85764 Oberschleißheim, Germany

Tel: +49 89 31603288
Fax: +49 89 316 03289
E-mail: rmatthes@bfs.de

6.1.2 *International Commission on Non-Ionising Radiation Protection (ICNIRP) Publications*

Non-ionizing Radiation: Executive summary of 4th International Non-Ionizing Radiation Workshop. Kyoto, Japan 22-25 May 2000. ICNIRP Publication 9/2000.

Guidelines on limiting exposure to non-ionizing radiation: Reference book of all ICNIRP guidelines and statements. R Matthes, JH Bernhardt and AF McKinlay (eds). ICNIRP publication 7/99

ICNIRP Guidelines: Guidelines for limiting exposure to time-varying electric, magnetic and electromagnetic fields (up to 300 GHz). Health Physics 74 (4): 494-522 (1998).

Non-ionising radiation: Proceedings of the 3rd International Non-Ionising Radiation Workshop, Baden, Austria, April 22-26, 1996. ICNIRP Publication 1/96

ICNIRP Statement: Health issues related to the use of hand-held radiotelephones and base transmitters. ICNIRP, Health Physics **70(4):** 587-593, 1996

ICNIRP Guidelines: Guidelines on limits of exposure to static magnetic fields. Health Physics **66(1):** 100-106, 1994

IRPA Guidelines on protection against non-ionising radiation, Eds. AS Duchêne, JRA Lakey and MH Repacholi, Pergamon Press (now available from McGraw Hill), 1991.

Protection of the patient undergoing a magnetic resonance examination. Health Physics **61(6):** 923-928, 1991

Guidelines on limits of exposure to 50/60 Hz electric and magnetic fields. Health Physics **58(1):** 113-122, 1990

Guidelines on limits of exposure to radio frequency fields. Health Physics **54(1):** 115-123, 1988

Alleged radiation risks from video display terminals. Health Physics **54(2):** 231-232, 1988

Enterprise V3.4

Copyright © Edward Wong

Ewer Park Stud

Coverage without itself

Tue Aug 14 15:52:30 2001

Map Backdrop
Best Server
UMTS
[x] x> -95.5 dBm Suburban
Pilot_Phase1
Pilot_Phase2
[Site] [Property] EW_Static Sites

Top Right: 000°45'33.19"W 51°28'22.72"N
Bottom Left: 000°53'53.12"W 51°25'1.23"N
Scale Ratio 1:34927
0 0.50 1.00 1.50 2.00 Km

Enterprise V3.4

Copyright © Edward Wong

Ewer Park Stud

Coverage by itself

Tue Aug 14 15:57:04 2001

Map Backdrop
Best Server
UMTS
x> -95.5 dBm Suburban
Pilot_Phase1
Pilot_Phase2
[Site] [Property] EW_single Sites

Top Right: 000°45'33.19"W 51°28'22.72"N
Bottom Left: 000°53'53.12"W 51°25'1.23"N
Scale Ratio 1:34927

0 0.50 1.00 1.50 2.00 Km

Enterprise V3.4

Copyright © Edward Wong

Ewer Park Stud

Coverage with surrounding sites

Tue Aug 14 15:49:06 2001

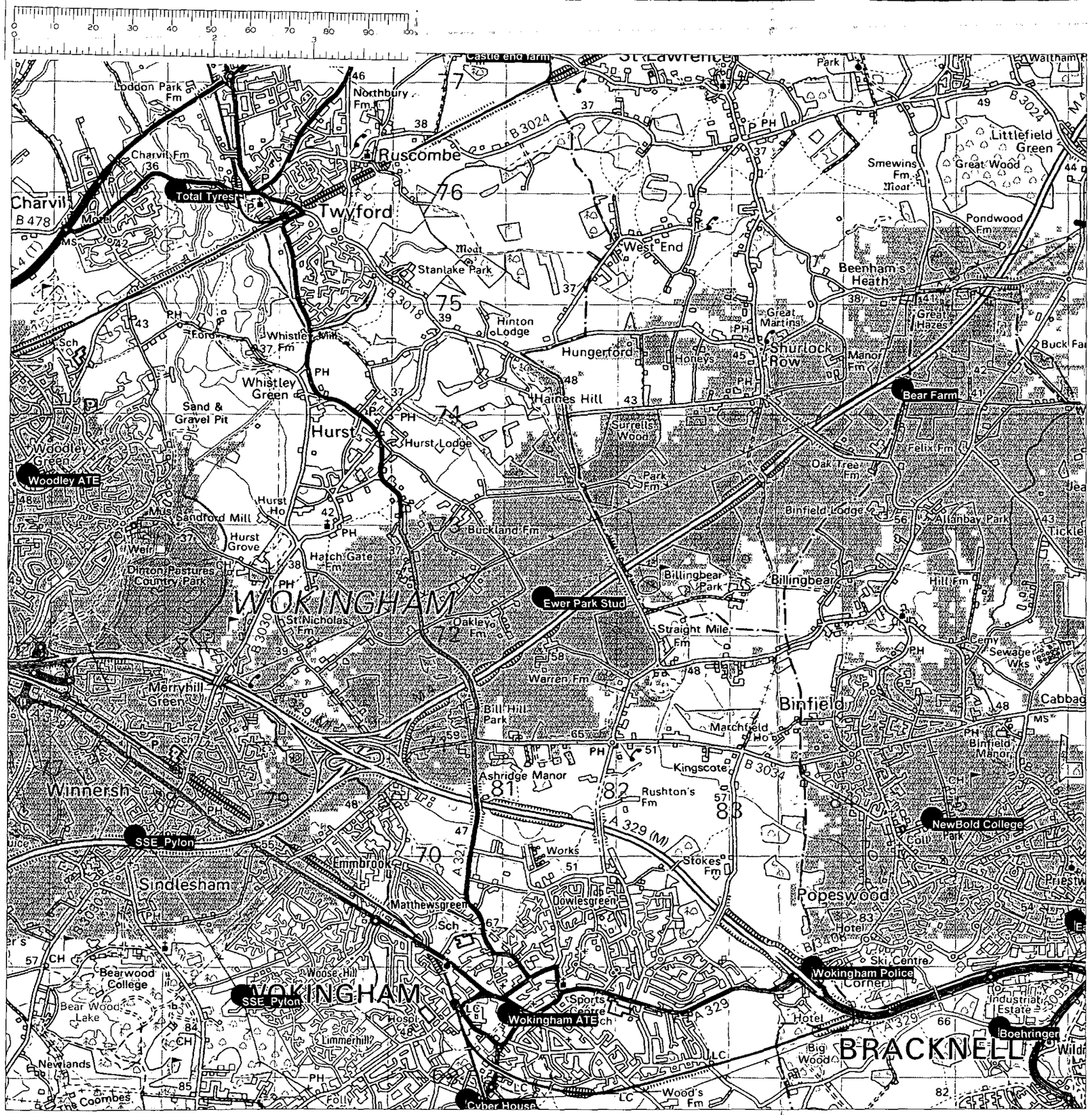

Map Backdrop
Best Server
UMTS
x> -95.5 dBm Suburban
Pilot_Phase1
Pilot_Phase2
[Site] [Property] EW_Static Sites

Top Right: 000°45'33.19"W 51°28'22.72"N
Bottom Left: 000°53'53.12"W 51°25'1.23"N
Scale Ratio 1:34927

0 0.50 1.00 1.50 2.00 Km