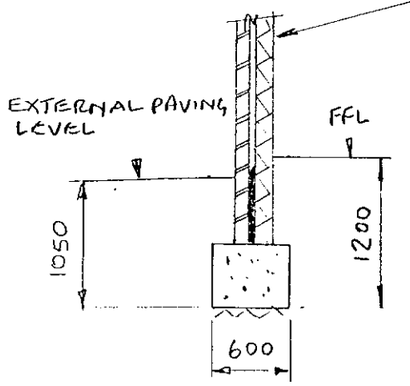

TYPICAL FOUNDATION 1:50

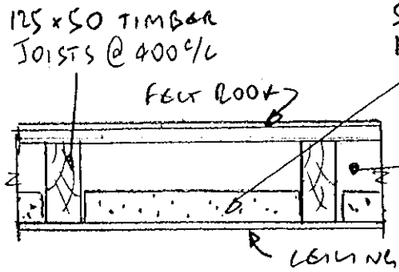

ROOF DETAIL

1:10

(A)

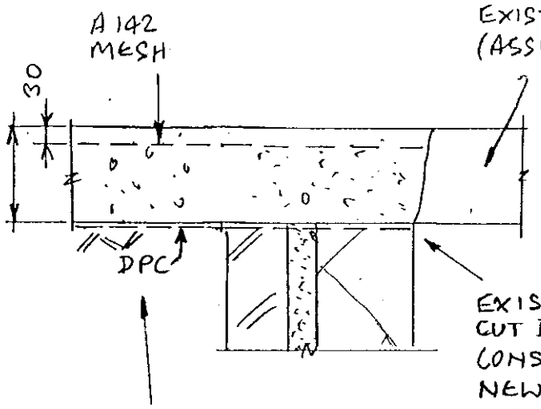

SECTION A-A 1:10

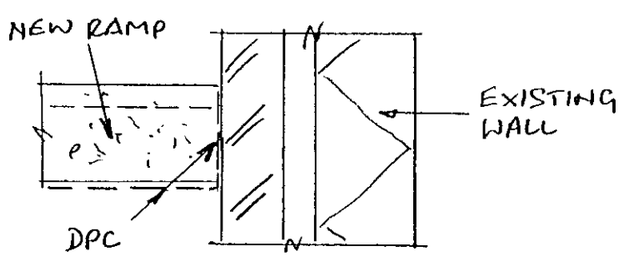

SECTION B-B 1:10

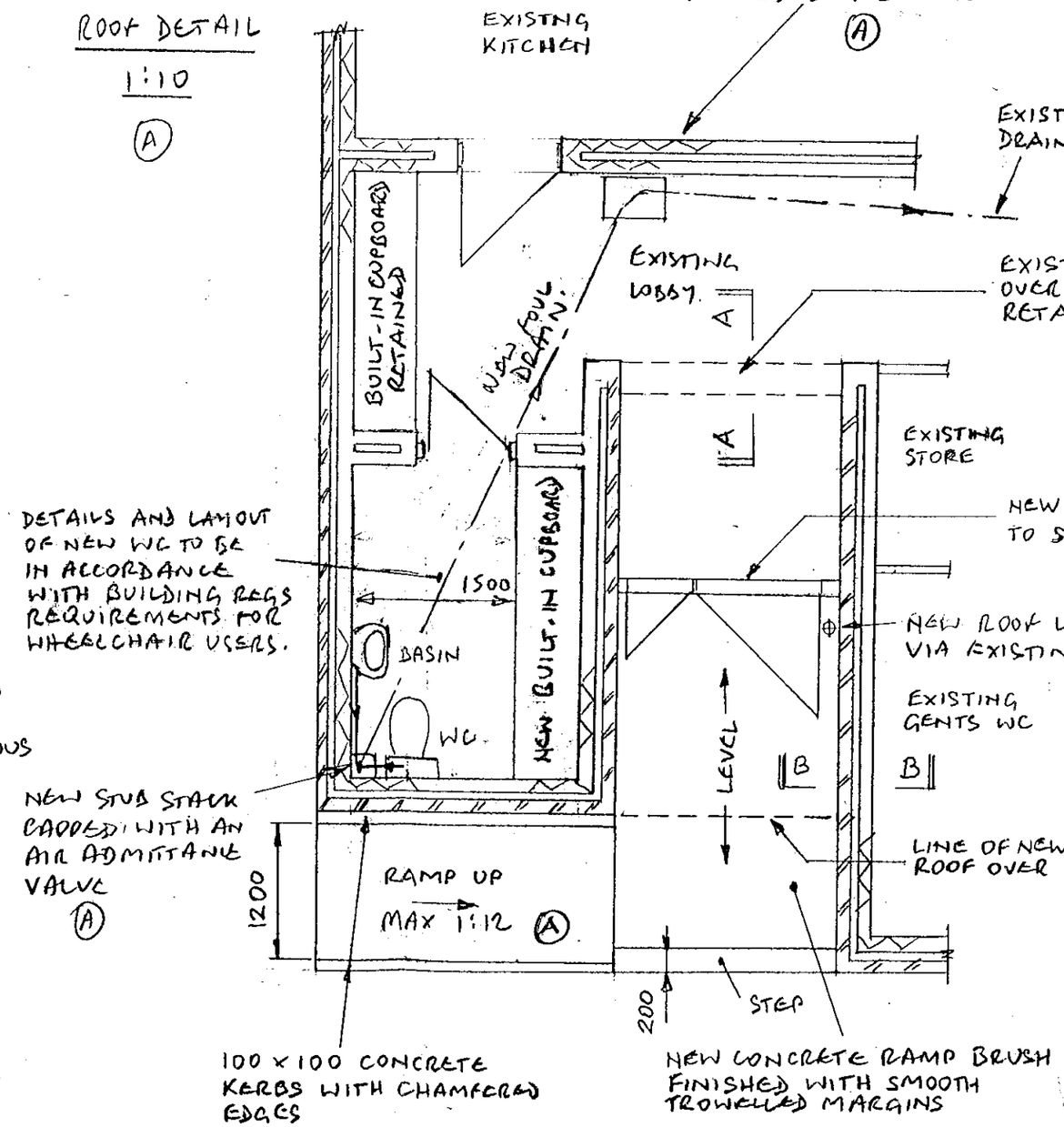

NEW FLOOR PLAN 1:50

27/6/01 REV A.
10/4/01 BUILDING CONTROL

EMMBROOK VILLAGE HALL
NEW DISABLED FACILITIES

SCALE: DRAWING NO 50	1:10
DRAWN: Amy	DATE: 06/01
DRG No: 07 A.	