Harry Brindle BSc (Hons)
Consultant Ecologist
Email: harrybrindle@arbtech.co.uk
Arbtech Consulting Ltd
arbtech.co.uk

Construction Ecological Management Plan

Survey site:

The Moat House, Arborfield, Garrison, Arborfiel RG2 9LN

Client:

Hicks Developments

Report date:

16th January 2026

Project:

This report is prepared to inform Wokingham Borough Council for a development comprising a conversion of the building into an apartment block for 4-5 residential dwellings.

1.0 Introduction

This Construction Ecological Management Plan (CEMP) has been prepared for the above-named client to outline measures to be implemented development works at the above-named site.

The purpose of this plan is to ensure the protection and mitigation of ecological receptors, adherence to best practices and industry standards, and to ensure that there is adequate supervision by licensed professionals. The CEMP also outlines the management frameworks required for the planning and implementation of construction activities to comply with local and national planning policy. As such, the CEMP aims to provide sufficient information to discharge conditions 27 of the approved planning application.

Table 1. Ecological context of the site and details any associated planning conditions.

Site Context and Landscape History	
The Site, indicated by the red line boundary on the 'Baseline Habitat Plan' (Appendix A), is approximately 0.52 ha in size. The Site comprises an existing three storey building with associated hardstanding, grasslands and scattered broadleaved trees. A species-rich native hedgerow forms the south-west boundary of the Site, and a line of broadleaved trees forms the northern boundary of the Site. The surrounding area includes a sports field, cricket pavilion and residential housing.	
Planning Conditions	
Condition 27	CEMP: Biodiversity (Construction Environment Management Plan) 27. No development shall take place (including demolition, ground works, vegetation clearance) until a construction environmental management plan (CEMP: Biodiversity) has been submitted to and approved in writing by the local planning authority. The CEMP (Biodiversity) shall include the following: a) Risk assessment of potentially damaging construction activities. b) Identification of biodiversity protection zones.

	c) Practical measures (both physical measures and sensitive working practices) to avoid or reduce impacts during construction (may be provided as a set of method statements). d) The location and timing of sensitive works to avoid harm to biodiversity features. e) The times during construction when specialist ecologists need to be present on site to oversee works. f) Responsible persons and lines of communication. g) The role and responsibilities on site of an ecological clerk of works (ECoW) or similarly competent person. h) Use of protective fences, exclusion barriers and warning signs. The approved CEMP shall be adhered to and implemented throughout the construction period strictly in accordance with the approved details, unless otherwise agreed in writing by the local planning authority.

Ecological Background Information

Detailed using desk study and site survey.

The site had an Ecological Constraints Report produced by AECOM in November 2024. This report identified the following habitats:

- Other neutral grassland
- Developed land & Buildings
- Sparsely vegetated urban land
- Species rich native hedgerow
- Broadleaved woodland – line of trees

Value for protected species on the site comprises the following:

- **Birds**- There is a high volume of nesting opportunities due to the volume of trees around the site, both within the development boundary and wider site. It is expected this also includes birds of prey, due to previous identification of Red kite near the site.

- **Badgers**- A suspected badger sett was identified at the base of tree T185. It had three sett entrances, north, east and south. It is possible that it may be used by foxes. A snuffle hole (digging by foraging badgers) was found nearby.

- **Bats**- The main buildings on site have value for roosting bats. The habitats on the site would also provide good quality foraging and commuting for bats due to the volume of trees in the landscape.

- **Reptiles**- The neutral grassland, hedgerows and area of sparsely vegetated land were suitable habitat for reptiles. The grassland contained anthills providing a source of prey and had good sun exposure.

- **Amphibians**- There were several waterbodies within 500m of the Site, the Garrison Lake and several ditches within 500m. Garrison Lake contains fish and is not suitable for great crested newt. The nearby ditches at the sports pitches and along the roads are mostly dry and do not contain vegetation suitable for egg laying. The Site is within a residential area and buildings, hardstanding and roads provide barriers to movement.

- **Terrestrial mammals-** The habitats on the site and wider site are likely to support a variety of terrestrial mammals, such as hedgehogs, foxes, rabbits and rodents.

Aims and Objectives

This report aims to identify key stakeholder requirements, ensure compliance by all stakeholders with all relevant legislation, minimise potential adverse effects on the environment and protected/notable species during construction.

Work Schedules and Ecological Presence

Work schedules will be developed to ensure activities with specific timing requirements are carried out in a manner that minimises harm to ecological receptors. These schedules will be provided to all relevant personnel and contractors involved in the project.

Ecological Clerk of Works (ECoW)

A qualified and suitably experienced ecologist will be present on-site during critical phases of development. Their role will be to oversee and monitor compliance with the CEMP, provide guidance, and take immediate action to prevent any harm to ecological receptors. Should protected species be identified during vegetation clearance, works will be halted whilst a suitably licenced ecologist and/or Natural England is contacted.

Persons Responsible and Lines of Communication

A Development Biodiversity Champion is selected for the construction phase of the development. The Biodiversity Champion will be someone with significant influence during construction, such as the contract, site or project manager. They are responsible for ensuring all actions outlined in the approved CEMP are implemented including the provision of a toolbox talk prior to works commencing. Any queries with regards to the mitigation prescriptions will be addressed to the project ecologist and communication will be retained between the Development Biodiversity Champion and the ECoW throughout the construction phase of the development where necessary to ensure the mitigation is applied and impacts to adjacent ecological receptors are effectively minimised. The project ecologist's contact details are located on the title page of this report. It is recommended that the Biodiversity Champion informs the ECoW of the commencement of construction works and provides updates where necessary. The ECoW will provide ecological expertise and guidance throughout.

2.0 Construction and Ecological mitigation measures

Details regarding the measure required to obtain or comply with planning permission or other consent and to comply with legislation can be found in Table 2.

Table 2. Construction and Ecological mitigation measures

Ecological Mitigation Measures	This table includes any measure required to obtain or comply with planning permission or other consent and to comply with legislation.
Risk during development	
1. Construction traffic and movement of plant/machinery/materials Could lead to the spread of pollutant. Noise, vibration and light disturbance could impact protected fauna such as breeding birds. Could lead to physical damage to retained vegetation. **2. Storage of materials, machinery and waste** Improper storage could lead to spread of pollutants into nearby habitat. **3. Light and noise during construction** Artificial lighting could disrupt nocturnal species such as bats, owls and invertebrates. Increase noise levels Could disturb nesting birds, roosting bats and mammals using **4. Pollution exposure from construction** Impacts to nearby habitats as a result form pollution generated during development. Such as run off into near by watercourses, gasses and fumes, toxic materials leaking into soils.	

Ecological Protection Areas and Buffer Zones

Ecological protection areas and buffer zones within the project site. These areas will be demarcated using physical means of protection, such as exclusion fencing, to prevent unauthorised access and minimise disturbance to sensitive habitats.

The area of retained vegetation to the southeast of the site will act as a Ecological Receptor Zone for any fauna encountered during the development works (If movement of said fauna is appropriate, see specific fauna requirements below). No storage of materials, fuel, machinery, or waste will be permitted within the buffer zone, and access by personnel or vehicles will be strictly prohibited unless for ecological monitoring or emergency reasons. Signage will be installed to reinforce compliance. The receptor zone will employ the use of signs such as those shown in figure 5 to warn personal not to enter the area.

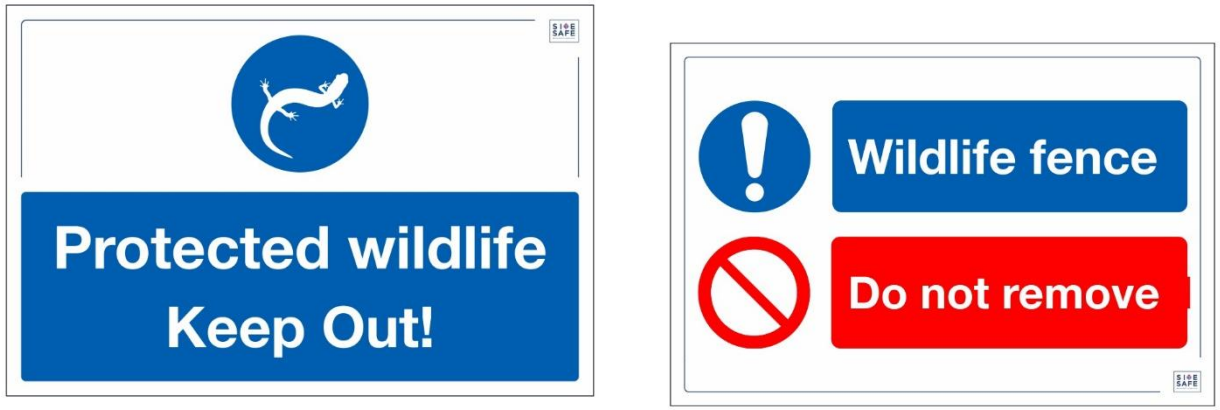

Figure 5. Signage to be installed in receptor area and one-way fencing as. Source - https://britishsafetysigns.co.uk/

Tree Protection

Tree root protection areas will be identified based on the existing tree inventory. A buffer from retained line of trees to the north of the development will be established and protected throughout the duration of construction activity. No trenches or ground works will be completed within the specified buffer of any retained trees on site. Trees will be appropriately protected in accordance with BS 5837:2012 - "Trees in relation to design, demolition and construction – Recommendations" and the Arboricultural Implications Report (SJA trees, 2024). As such, it is recommended that the trees are separated from construction works by protective fencing throughout the duration of the construction phase of the development. A fencing specification is included within **Figure 1** below. Appropriate signage is to be included on the fencing in order to ensure that fences are not moved after establishing. As shown in **Figure 2**

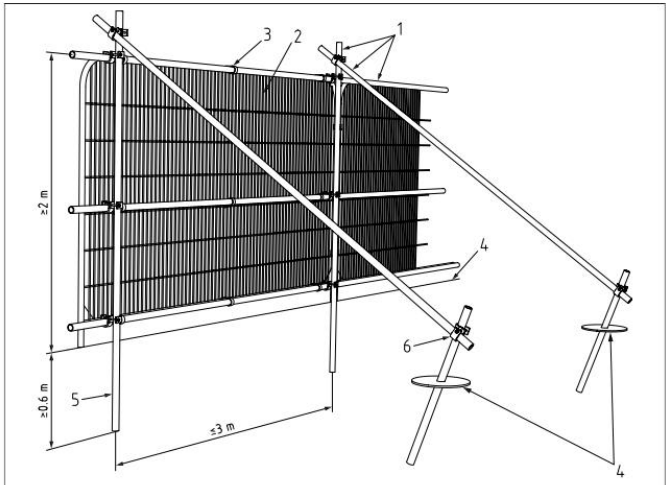

Key
1 Standard scaffold poles
2 Heavy gauge 2 m tall galvanized tube and welded mesh infill panels
3 Panels secured to uprights and cross-members with wire ties
4 Ground level
5 Uprights driven into the ground until secure (minimum depth 0.6 m)
6 Standard scaffold clamps

Figure 2. Default protective barrier specification. Source -British Standards Institute 2012.

Figure 3. Appropriate signed to attached to root protection zone fencing. Source- www.Safetysignsandnotices.co.uk

Veteran Tree Protection

The veteran English oak (*Quercus robur*, T185) located adjacent to the southern boundary of the site will be permanently protected as an irreplaceable habitat. An exclusion buffer will be maintained around the tree in accordance with current best practice, with cleft chestnut fencing installed at the canopy edge to prevent public access, soil compaction, storage of materials or any ground disturbance within the rooting environment. The buffer will be managed sensitively to maintain the tree's ecological function, with no excavation, changes in ground levels or use of heavy machinery permitted within the protected area. Despite evidence of decay features, cavities and historic storm damage, the tree is of high ecological, landscape and cultural value and will be retained and safeguarded for the lifetime of the development, with all deadwood and veteran features retained where safe to do so to support associated biodiversity.

Pollution Prevention	
Statutory Compliance	To limit impacts of pollution resulting from the construction phase of the development, construction works must be completed in accordance with current statutory guidelines relating to pollution prevention (Environmental Agency 2016).

	Furthermore, although withdrawn in 2015, pollution prevention guidelines detailed within guidance document: *PPG6: Working at Construction and Demolition Sites* (Environment Agency 2010) remain applicable to the site. Considering both the relevant statutory requirements and best practice measures detailed within guidance document PPG6, the below mitigation prescriptions are considered suitable to mitigate impacts of pollution during the construction phase of the development. The allocated Biodiversity Champion will be responsible for ensuring the below mitigation recommendations are undertaken successfully during the works.
Materials Storage and Surface Water Runoff	It is recommended that the Biodiversity Champion ensures that: • No stockpiles are created on exposed ground areas and ensure that all materials and chemicals are stored securely and safely on site in accordance with current Control of Substances Hazardous to Health (COSHH) regulations (HSE 2002). • Stockpiles are located as far away as possible from the ecological buffer zone and on level ground to prevent any accidental run-off. • Contaminated materials, chemicals, and other hazardous substances must be stored on an impermeable surface, in a bunded area, within any area of the site. • All chemicals and hazardous substances are stored away from areas where there is heightened risk of damage from impact or collision such as site traffic. • All chemicals and hazardous substances are labelled, containers are sealed when not in use and inspected regularly and fit for purpose. • Any damaged or old containers are replaced in line with the duty of care requirements. Note such containers may be considered hazardous waste. • Staff are trained in use of spill kits and emergency procedures.

	• Ensure there is a designated 'responsible person' on site at all times. • Lock storage facilities when not in use.
Site Drainage	It is recommended that the Biodiversity Champion ensures that: • Pollution risks are identified pre-construction. • Pollutants are prevented from entering drains where possible. • If any pollutant enters a drain, immediately stop the pollution with a physical block, stop the activity causing the pollution, then notify the Environment Agency for surface water drains or the local sewerage provider for foul water drains. If there's a spill, accident, or emergency, try and prevent pollutants entering the drains. • Report all pollution incidents to site management and the Environment Agency. • Inspect drains and protection measures frequently and maintain them during the construction activity. Well maintained drains will also reduce risks of flooding and subsequent surface water run-off. • As a last resort, should any pollutants be required to enter the drainage system on site, permission from Environment Agency or the local sewerage provider must be sought before discharging anything other than clean uncontaminated surface water to a drain and other surface waters or groundwater. Apply for permission early, as authorisation can take up to four months.
Noise	The Biodiversity Champion must ensure that noise levels are kept to a minimum in accordance with best practice as defined in the Control of Pollution Act 1974 to avoid unacceptable levels of noise and vibrations. Further guidance can be found in British Standard 5228-1:2009. Such measures applicable to the proposed development primarily include agreed working hours limiting night work, using the quietest equipment and plant available, shutting down equipment when not in use, and completing deliveries during working hours only. Most notably, prescriptions as to limit noise of plant machinery as detailed

within **Table B.1** within the code of practice for noise control (British Standards Institution, 2014) is likely to have the most significant impact during construction activity. Table B.1 is shown below.

Table B.1 **Methods of reducing noise levels from construction plant**

Plant	Noise reduction of plant			Alternative plant
	Source of noise	**Possible remedies** (to be discussed with machine manufacturers)	**A-weighted sound reduction** dB	
Hammer drive piling equipment	Pneumatic/diesel hammer or steam winch vibrator driver	Enclose hammer head and top of pile in acoustic screen	5 to 10	Bored piling Vibratory system Drop hammer completely enclosed in box with opening at top for crane access Steel jacket completely enclosing drop hammer with dolly and polystyrene chips fed to impact surface to dissipate energy Pressed-in piling which generates its driving force from the frictional restraint of other piles
	Sheet pile	Acoustically dampen sheet steel piles to reduce levels of resonant vibration		
	Impact on pile	Use resilient pad (dolly) between pile and hammer head. Packing needs to be kept in good condition		
	Cranes cables, pile guides and attachments	Careful alignment of pile and rig		
	Power units or base machine	Fix more efficient sound reduction equipment or exhaust. Acoustically dampen panels and covers. When intended by the manufacturer, engine panels need to be kept closed. Use acoustic screens when possible		
Earth-moving plant: • bulldozer • compactor • crane • dump truck • dumper • excavator • grader • loader • scraper	Engine	Fit more efficient exhaust sound reduction equipment Manufacturers' enclosure panels need to be kept closed	5 to 10	Alternative super silenced plant might be available. Consult manufacturers for details

Table B.1 **Methods of reducing noise levels from construction plant** *(continued)*

Plant	Noise reduction of plant			Alternative plant
	Source of noise	**Possible remedies** (to be discussed with machine manufacturers)	**A-weighted sound reduction** dB	
Compressors and generators	Engine Compressor or generator body shell	Fit more efficient sound reduction equipment Acoustically dampen metal casing Manufacturers' enclosure panels need to be kept closed	Up to 10	Super silenced plant is available. Consult manufacturers for details Electric-powered compressors are available as opposed to diesel or petrol Sound-reduced compressor or generator can be used to supply several pieces of plant. Use centralized generator system
	Total machine	Erect acoustic screen between compressor or generator and noise-sensitive area. When possible, line of sight between top of machine and reception point needs to be obscured	Up to 10	
		Enclose compressor or generator in ventilated acoustic enclosure	Up to 20	
Pneumatic concrete breaker, rock drills and tools	Tool	Fit suitably designed muffler or sound reduction equipment to reduce noise without impairing machine efficiency	Up to 15	Hydraulic and electric tools are available For large areas of concrete, machine designed to break concrete in bending can be used Thermic lance
		Ensure all leaks in air line are sealed		
	Bit	Use dampened bit to eliminate ringing		
	Total machine	Erect acoustic screen between compressor or generator and noise-sensitive area. When possible, line of sight between top of machine and reception point needs to be obscured	Up to 10	
		Enclose breaker or rock drill in portable or fixed acoustic enclosure with suitable ventilation	Up to 20	
Rotary drills, diamond drilling and boring	Drive motor and bit	Use machine inside acoustic shed with adequate ventilation	Up to 15	Thermic lance

Table B.1 **Methods of reducing noise levels from construction plant**

Plant	Noise reduction of plant			Alternative plant
	Source of noise	**Possible remedies** (to be discussed with machine manufacturers)	**A-weighted sound reduction** dB	
Hammer drive piling equipment	Pneumatic/diesel hammer or steam winch vibrator driver	Enclose hammer head and top of pile in acoustic screen	5 to 10	Bored piling Vibratory system Drop hammer completely enclosed in box with opening at top for crane access Steel jacket completely enclosing drop hammer with dolly and polystyrene chips fed to impact surface to dissipate energy Pressed-in piling which generates its driving force from the frictional restraint of other piles
	Sheet pile	Acoustically dampen sheet steel piles to reduce levels of resonant vibration		
	Impact on pile	Use resilient pad (dolly) between pile and hammer head. Packing needs to be kept in good condition		
	Cranes cables, pile guides and attachments	Careful alignment of pile and rig		
	Power units or base machine	Fix more efficient sound reduction equipment or exhaust. Acoustically dampen panels and covers. When intended by the manufacturer, engine panels need to be kept closed. Use acoustic screens when possible		
Earth-moving plant: • bulldozer • compactor • crane • dump truck • dumper • excavator • grader • loader • scraper	Engine	Fit more efficient exhaust sound reduction equipment Manufacturers' enclosure panels need to be kept closed	5 to 10	Alternative super silenced plant might be available. Consult manufacturers for details

Implementation of the Waste Hierarchy	The Biodiversity Champion must ensure that all construction activity is completed in accordance with the Waste Hierarchy (Defra 2011) in an attempt to reduce the amount of waster produced during the construction phase of the development. As such, the construction phase must be completed in accordance with the below core principles: *In the first instance:* • Re-use products and materials where possible.

	• Recycle and compost material resources where possible. • Attempt to recover energy from waste. *Where none of the above options offer an appropriate solution, waste disposal is the final option:* • Only transfer controlled waste to an "authorised person" (Waste Collection Authority, the holder of an Environmental Permit, Registered Water Carrier or Waste Disposal Authority). • Ensure that non-hazardous waste is transferred under a Waste Transfer Note which must be retained for two years. • Hazardous waste is moved under a waste consignment note that provides a clear description of the waste material. The consignment note must be retained for three years. • The waste is the responsibility of the company until it has been fully recovered or finally disposed of.
Biosecurity and Invasive Species Management[1]	
Invasive/non-native Species Mgt	Rhododendron was identified on the site, located at within the line of trees. Construction activities risk spreading this species around the site, as well as being tracked into the wider environment via plant tyres, as well as through unwashed boots. This risk will be managed via the implementation of appropriate biosecurity measures as listed below.

[1] https://ccsbestpractice.org.uk/entries/biosecurity-preventing-the-introduction-of-invasive-species-to-site/

https://www.nonnativespecies.org/biosecurity/biosecurity-in-the-field/#:~:text=Basic%20biosecurity%20advice%20for%20site%20visits&text=If%20practical%20do%20not%20take,debris)%20before%20leaving%20the%20site.

Biosecurity	A Biosecurity Declaration Form will be distributed via email to all contractors intending to send plant machinery to the development site. This instructs thot power washing of all plant prior to entry on site to remove all traces of mud debris etc. The completed form must be returned to the site Biodiversity Champion prior to deliver/access. This form and a copy of the CEMP will be sent to all subcontractors that intend to bring machinery onto the site. Upon arrival to site the plant item is inspected at a designated quarantine area. This inspection ensures the delivered plant item has been thoroughly cleaned. Should the item of plant be deemed to be inadequately cleaned it will be refused entry. Rhododendron present on site will be sensitively removed prior to the commencement of works to prevent the spread of a non-native, invasive species listed on Schedule 9 of the WCA (see Appendix 4). The Rhododendron will be removed using hand tools only. The most effective method of removal is through hand pulling, which results in minimal soil disturbance. Hand pulling young shrubs will typically result in the full removal of the shrub and associated root network, which will prevent the re-establishment. Mature shrubs are likely to have a deeper and more established root network unlikely to be removed in full by hand pulling alone. Where there are mature shrubs, removal must be aided using hand tools to expose the root network in full so the entire shrub and associated roots can be removed. Development works will not commence until Rhododendron has been successfully removed from the site ***Advice for Contractors on Site.*** 1. Avoid taking any vehicles onto the parkland beyond those essential in completing works, keep to established tracks and park vehicles on established parking areas away from the pasture. 2. Arrive at the site with clean equipment, and vehicle, paying particular attention to wheels.

	3. Ensure equipment and footwear is clean (visually from soil and debris) before entering/leaving the site. 4. Facilities will be provided on the site in the work zone surrounding the buildings to clean footwear/equipment. 5. Keep access to a minimum. Such robust biosecurity measures will prevent the leaving behind of a degraded environment and subsequent financial bills for the control of introduced invasive species, or any species that may alter communities within nearby designated sites.
Wildlife Protection - Precautionary Methods of Working	
Herpetofauna	The suitability of the site for reptiles and amphibians (Herpetofauna) is relatively low given the lack of suitable features. However, to ensure transient individuals are not harmed or killed during development, a precautionary working method will be adopted. **Ecological Clerk of Works** A qualified ecologist will be on standby to act as an ECoW during the development and will be immediately contacted upon the identification of herpetofauna. **Site Management During Construction** • During the course of construction works a site wide check for reptiles and amphibians will be carried out by contractors at the commencement of each working day. Any materials will be stored on pallets away from tall vegetation or boundaries.

	• Debris created during the development will be safely disposed of in a skip. If no skip is available the debris will be stored off the ground (e.g. on pallets) until it can be removed from site, to prevent common reptiles and amphibians from using the rubble piles for hibernation or refugia. • All trenches will (where possible) be backfilled before nightfall, or a ramp will be left to allow amphibians to easily exit. Any trench that could not be closed the previous day must be checked for reptiles and amphibians at the beginning of the next working day; particularly where this is scheduled for infilling. • Any chemicals or pollutants used or created by the development will be stored and disposed of correctly according to COSHH regulations. • Where for any reason contractors are a non-compliant and rubble and other piled items are left on the floor overnight or for any period of time beyond that working day, they must be dismantled by hand. • Any reptiles or amphibians found must be encouraged to move away of their own volition, or if in immediate danger and unable to perambulate themselves, will be captured in gloved hand or by any other means avoiding injury and safely relocated to suitable cover within retained habitat. No amphibian will be handled via bare hand due to the risk they may absorb toxic compounds through their permeable skin. • If at any point GCN or reptiles are found during development, all works must cease until further advice has been obtained from a qualified ecologist and the relevant regulators.
Birds	The trees around the site provide foraging and nesting habitat for a wide range of species. Habitat loss being relatively minor, it is likely to be inconsequential to local bird populations owing to the retention and enhancement of the habitats across the majority of the site as well as the creation of new habitats.

	The proposed development could result in the disturbance and subsequent abandonment of active bird nests. Proposed development could result in the disturbance of nests of schedule 1 species – Red kite which have been noted as utilising sites nearby. Development works will be undertaken outside the core nesting period 1st March to 31st August. If this timeframe cannot be avoided, a nesting birds check of the vegetation (and any remaining or regrowth vegetation from earlier cuts) will be undertaken, by the project ecologist or ECoW, within 48 hours prior to the commencement of work. All active nests will need to be retained with a species-appropriate (generally 5m) buffer until the young have fledged (species specific but typically 4-6 weeks). A watching brief will be undertaken during clearance in case any nests were not evident during the first check. The buffer will need to be increased in the event of the presence of any Schedule 1 species as reckless disturbance as well of destruction of the nests of such species is an offence. Buffer zones regarding schedule 1 species are on a case by case, species by species basis and must be reflected accordingly.

	If schedule 1 species are identified nesting, these areas must be retained, and suitable fencing and signage installed to prevent encroachment into these areas. It is an offence to recklessly disturbed adult and independent young in proximity to their nests as well as the nests themselves. Examples of appropriate installed work signs are shown in **Figure 4.** Signs can also be installed in regard to non-schedule 1 species, installed in full view in areas where nesting birds have been identified on the pre-work checks. **Figure 4.**- Work signage regarding nesting birds on the site. Source- www.Britishsafetysigns.co.uk
Bats	Information concerning the protection of bats during development works has been outlines in a separate Bat Mitigation Plan (Arbtech, 2026).
Badgers and other terrestrial mammals	The following recommendations are given in order to mitigate against potential harm to hedgehogs, badgers and other mammalian fauna during the development works.

	• The work zone will be checked for wildlife prior to works commencing, with any fauna encouraged to move away via their own volition or transported by gloved hand to the reptile receptor area if this not be possible. This will only apply to smaller mammal species. Larger mammals such as badgers and foxes will not be transported by hand. • Any inadvertently injured wildlife will be taken to an appropriate local wildlife carer or vet. • Any trenches dug will ideally be backfilled before contractors leave. If this is not possible they will be covered at night or have a rough sawn plank placed in them to act as a ramp for any wildlife which may fall in. They must be checked for wildlife before backfilling. • Security lighting must be directed away from undergrowth and vegetated site boundaries. • Any chemicals or pollutants used or created by the development will be stored and disposed of correctly according to COSHH regulations.

Compliance and Reporting

The CEMP requires stakeholders to comply fully with the pre-construction and construction-related elements of any mitigation strategies agreed with the Local Planning Authority and Natural England under any license requirements. Construction activities will therefore be conducted strictly in accordance with the approved CEMP. Regular inspections and monitoring will be undertaken to ensure compliance with the plan's requirements.

Any deviations or incidents that may affect ecological receptors will be immediately reported to the designated ecologist / Natural England. Updates to the CEMP will be relayed to the Local Planning Authority.

The CEMP will be periodically reviewed and updated as necessary throughout the construction phase to address changing site conditions and evolving ecological considerations.

Hicks Developments
The Moat House, Arborfield, Garrison, Arborfiel RG2 9LN

Appendix 1: Site Landscape master plan

Appendix 2: Habitat on-site creation and enhancements.

Appendix 3: Tree root protection plan

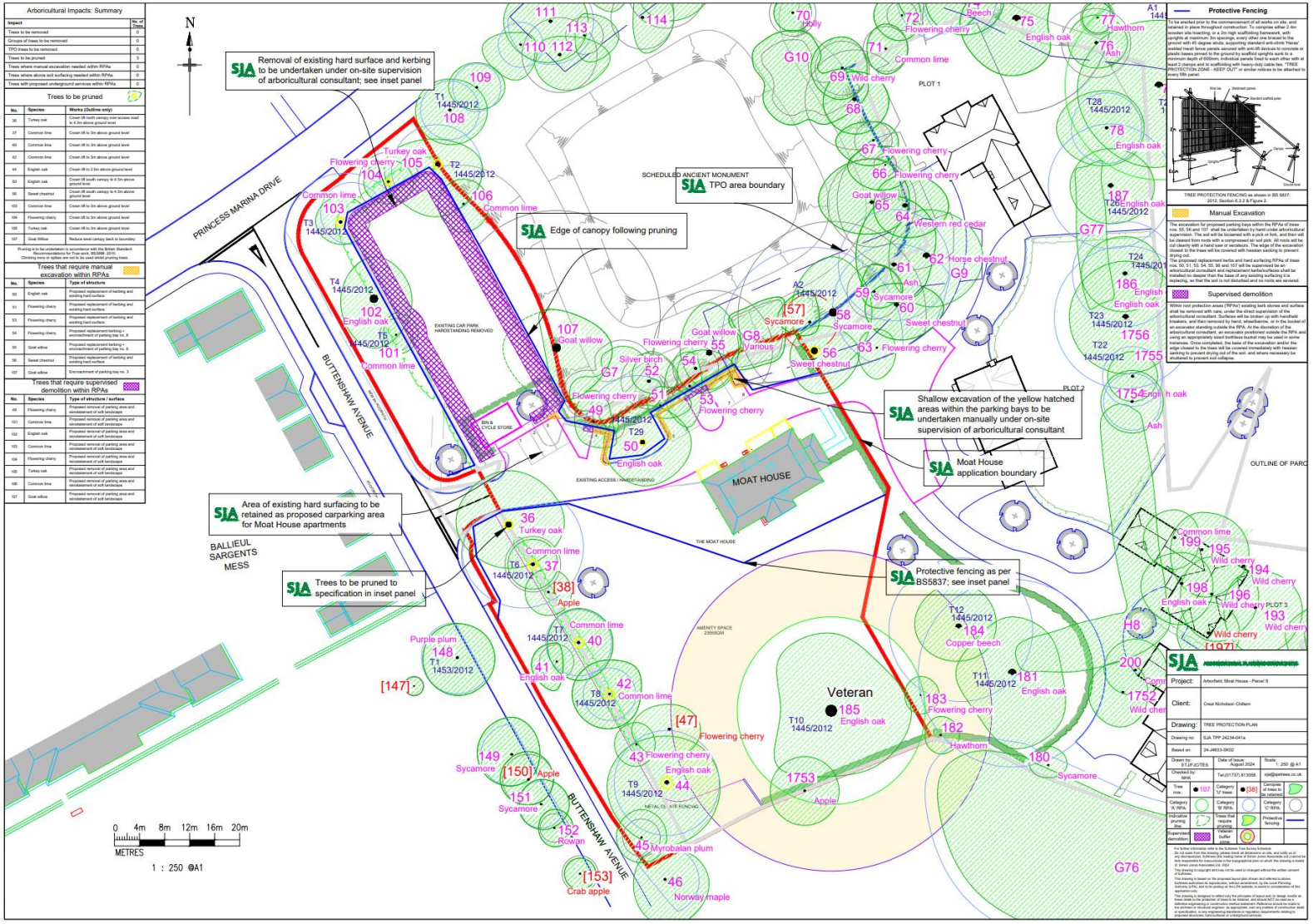

Construction Ecological Management Plan

Limitations and Copyright

Legal

Arbtech Consulting Limited has prepared this report for the sole use of the above-named client or their agents in accordance with our General Terms and Conditions, under which our services are performed. It is expressly stated that no other warranty, expressed or implied, is made as to the professional advice included in this report or any other services provided by us. This report may not be relied upon by any other party without the prior and express written agreement of Arbtech Consulting Limited. The conclusions and recommendations contained in this report are based upon information provided by third parties. Information obtained from third parties has not been independently verified by Arbtech Consulting Limited.

Arbtech cannot be held responsible for any project management failures, delays or unforeseen costs arising from failure to read and ensure understanding of the content with in, Nor is Arbtech responsible for any adverse outcomes arising from failure to account for ecological advice given at any stage throughout the project collaboration.

© This report is the copyright of Arbtech Consulting Limited. Any unauthorised reproduction or usage by any person other than the addressee is strictly prohibited.

Validity

The survey results and recommendations contained within this report are valid for 18 months. An updated site visit may be required if the report is to be used any longer than 18 months after completion

Version control			
Status	**Issue**	**Name**	**Date**
Draft	0.1	Harry Brindle BSc (Hons), Consultant ecologist	16/01/2026
Final	1.0	Harry Brindle BSc (Hons), Consultant ecologist	19/01/2026
Updated	2.0	Harry Brindle BSc (Hons), Consultant ecologist	13/03/2026