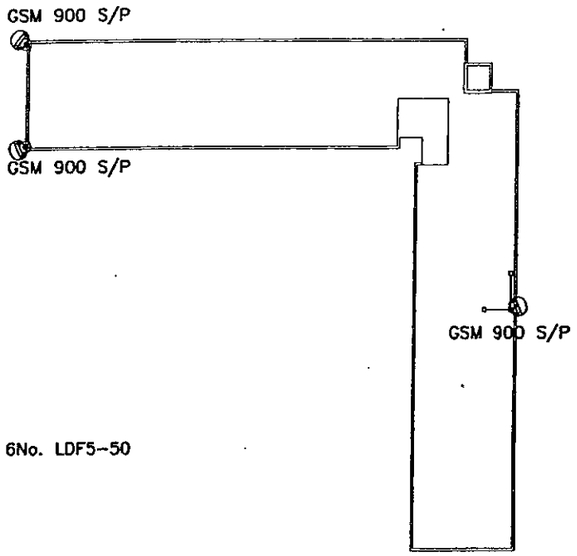

EXISTING ANTENNA LAYOUT (Y) (All faces similar)

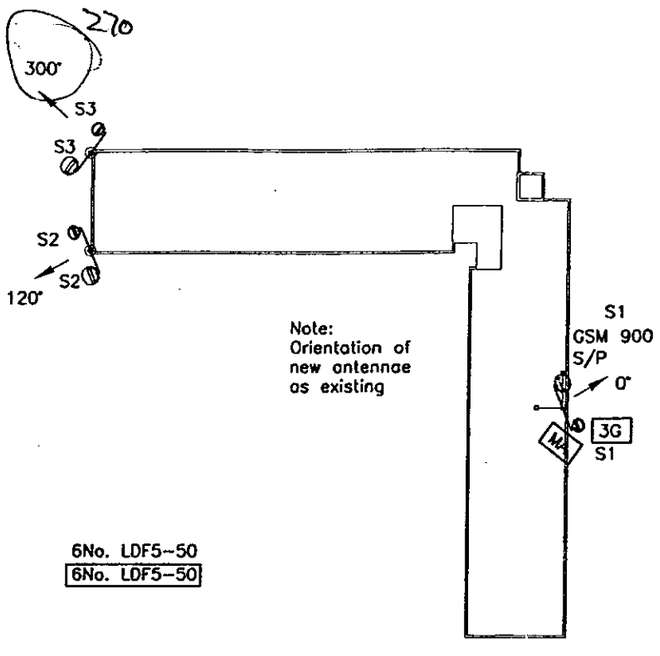

ANTENNA LAYOUT (LAUNCH) (All faces similar)

Not Applicable

ANTENNA LAYOUT (LONG TERM) (All faces similar)

NOTES
1. This drawing is the Copyright of BTCellnet and must not be reissued, loaned or copied without written consent
2. Dimensions are in millimetres unless noted otherwise. Do not scale, use written dimensions only
3. Antenna Key:
S/P – Single Polar
D/P – Dual Polar
D/B – Dual Band
D – Diplexors
MA – Mast Head Amps
4. New works highlighted with box surround or, 'New' text
5. Feeder length:
0° 43m
120° 43m
300° 45m

TL/2001/3279
2-2-01

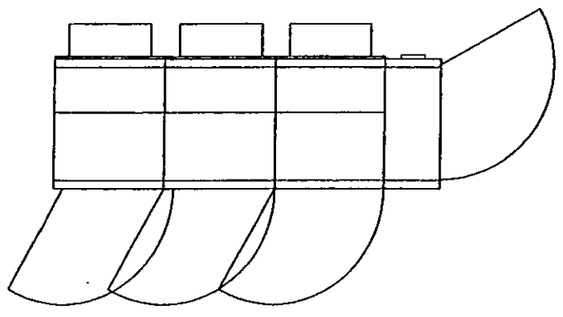

Existing M-Cell
6 Cabinets

EXISTING EQUIPMENT LAYOUT

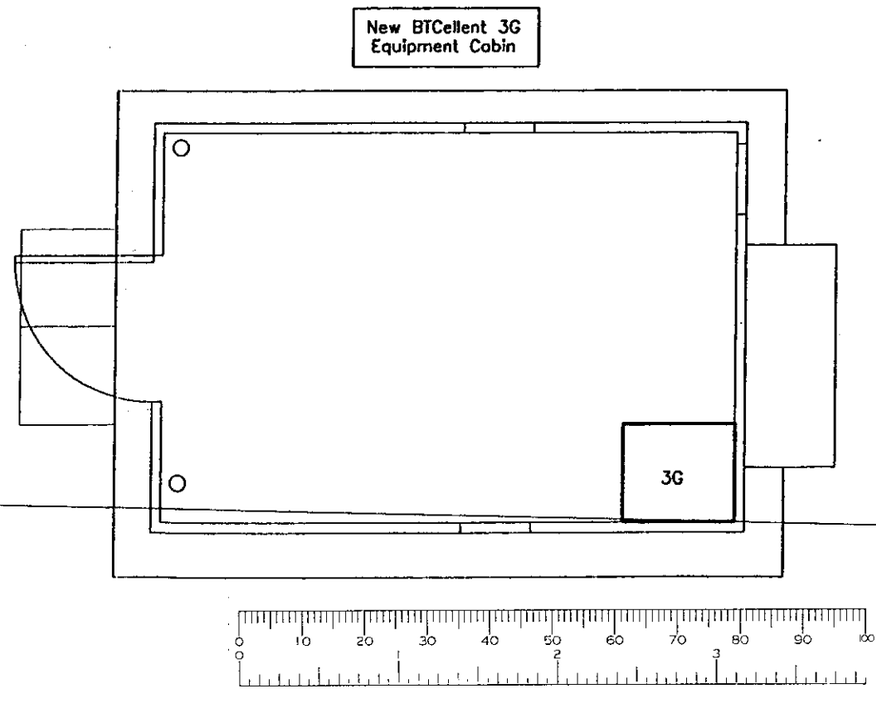

NEW EQUIPMENT LAYOUT

Rev	Date	Description	Drw	Ckd

Grantham Parsons and Nolan Ltd
Triumph House, Birmingham Road
Meriden, Nr. Coventry CV5 9AZ
Tel: (01676) 522866 Fax: (01676) 521081

BTcellnet
NETWORK IMPLEMENTATION

Project Title:
Cell 3611
Earley

Drawing Title:
Equipment & Antenna Layout

Scale: NTS
Drawn: RS
Date: 10/01/01
Checked: DJ

Drawing Number:
3611/004

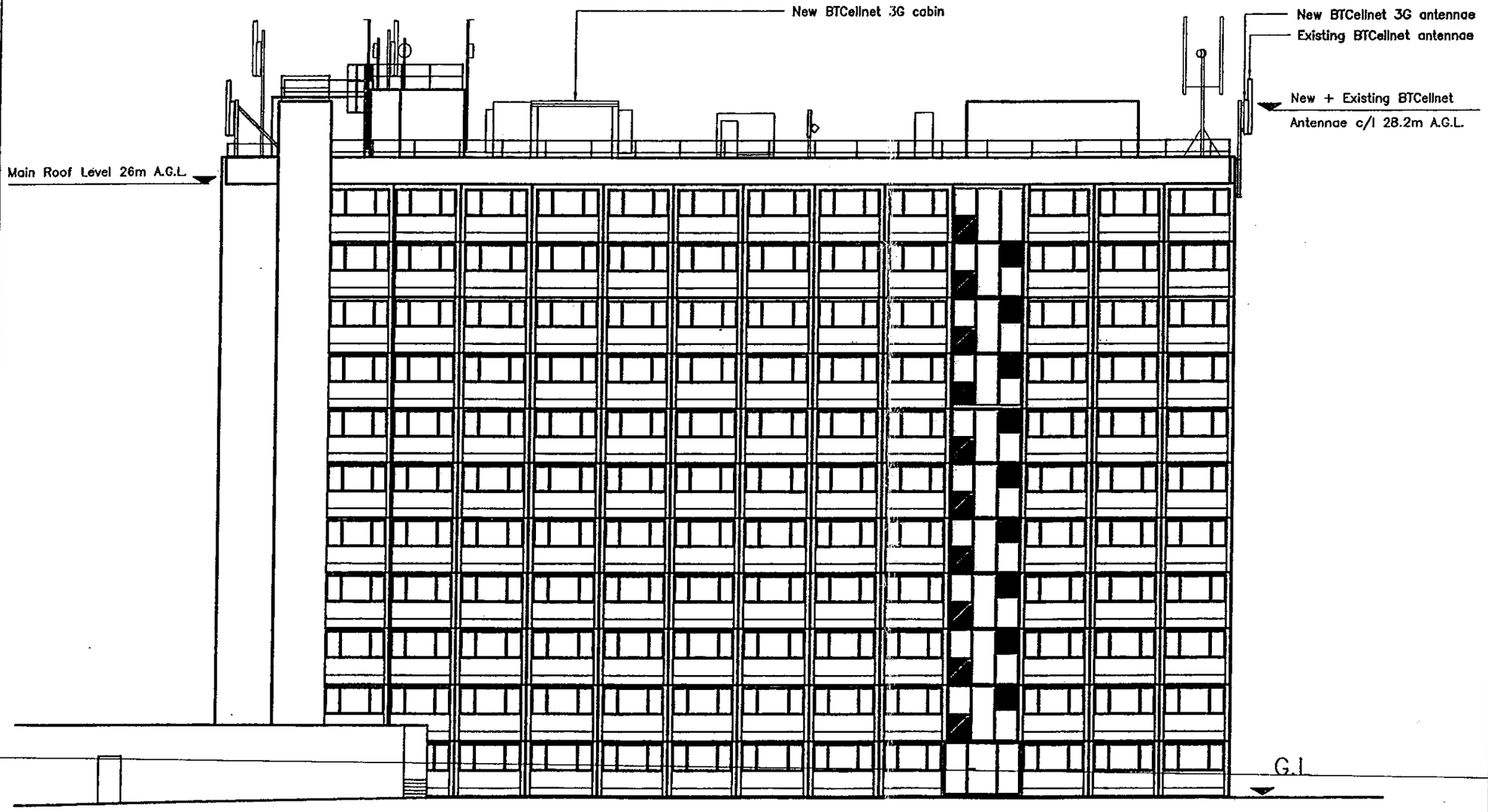

NORTH EAST ELEVATION – 1:200

NOTES
1. This drawing is the Copyright of BTCellnet and must not be reissued, loaned or copied without written consent
2. Dimensions are in millimetres unless noted otherwise. Do not scale, use written dimensions only

TL/2001/3271
2.2.01

Rev	Date	Description	Drw	Ckd

Grantham Parsons and Nolan Ltd
Triumph House, Birmingham Road
Meriden, Nr. Coventry CV5 9AZ
Tel: (01676) 522866 Fax: (01676) 521081

BTcellnet
NETWORK IMPLEMENTATION

Project Title:
Cell 3611
Earley

Drawing Title:
Site Elevation

Scale: As Shown
Drawn: RS
Date: 10/01/01
Checked: DJ

Drawing Number:
3611/003

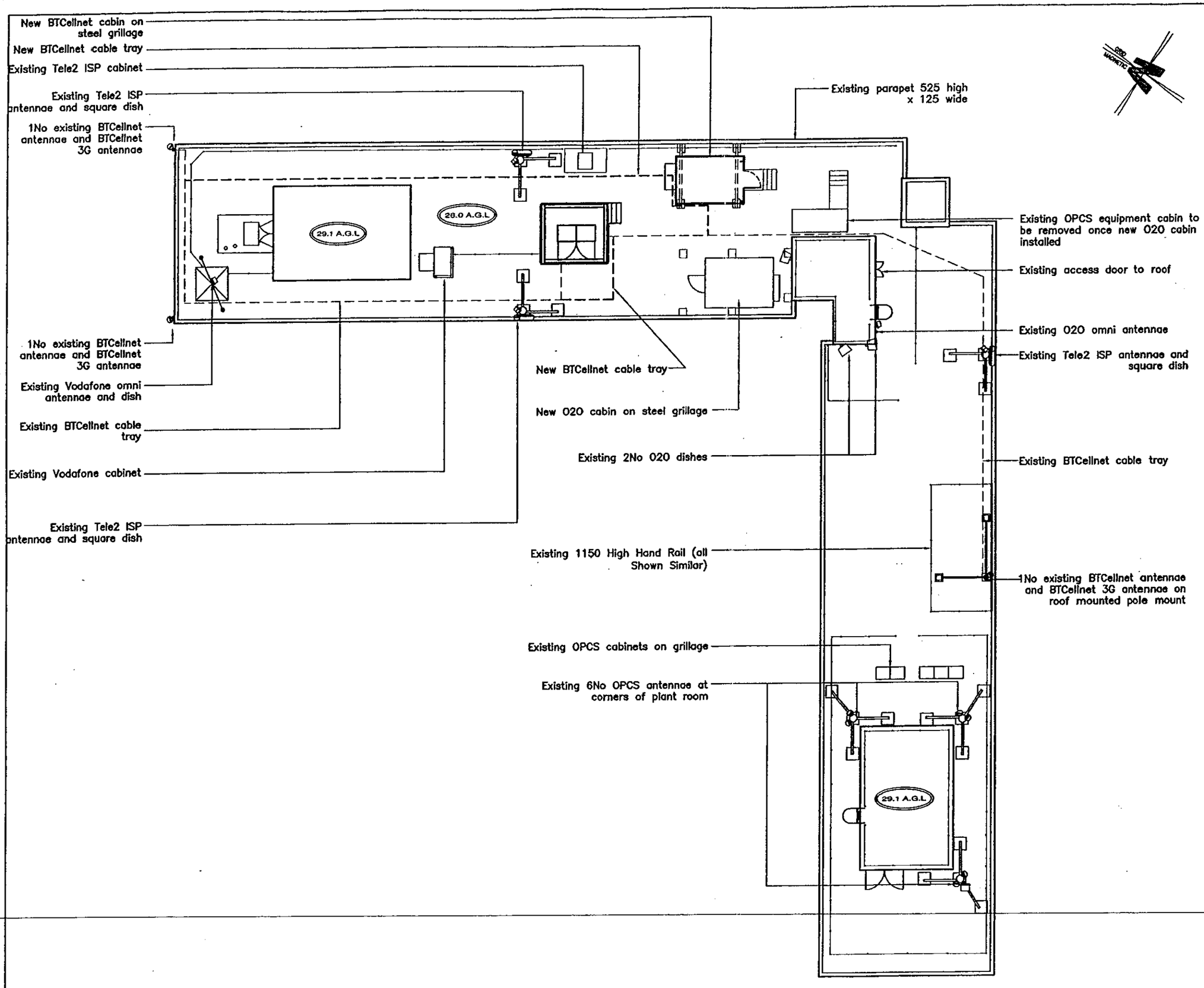

SITE PLAN – 1:200

NOTES
1. This drawing is the Copyright of BTCellnet and must not be reissued, loaned or copied without written consent
2. Dimensions are in millimetres unless noted otherwise. Do not scale, use written dimensions only

TL/2001/3279
2.2.01

Rev	Date	Description	Drw	Ckd

Grantham Parsons and Nolan Ltd
Triumph House, Birmingham Road
Meriden, Nr. Coventry CV5 9AZ
Tel: (01676) 522866 Fax: (01676) 521081

BTcellnet
NETWORK IMPLEMENTATION

Project Title:
Cell 3611
Earley

Drawing Title:
General Arrangement

Scale: As Shown	Drawn: RS
Date: 10/01/01	Checked: DJ

Drawing Number:
3611/002

LOCATION OF SITE

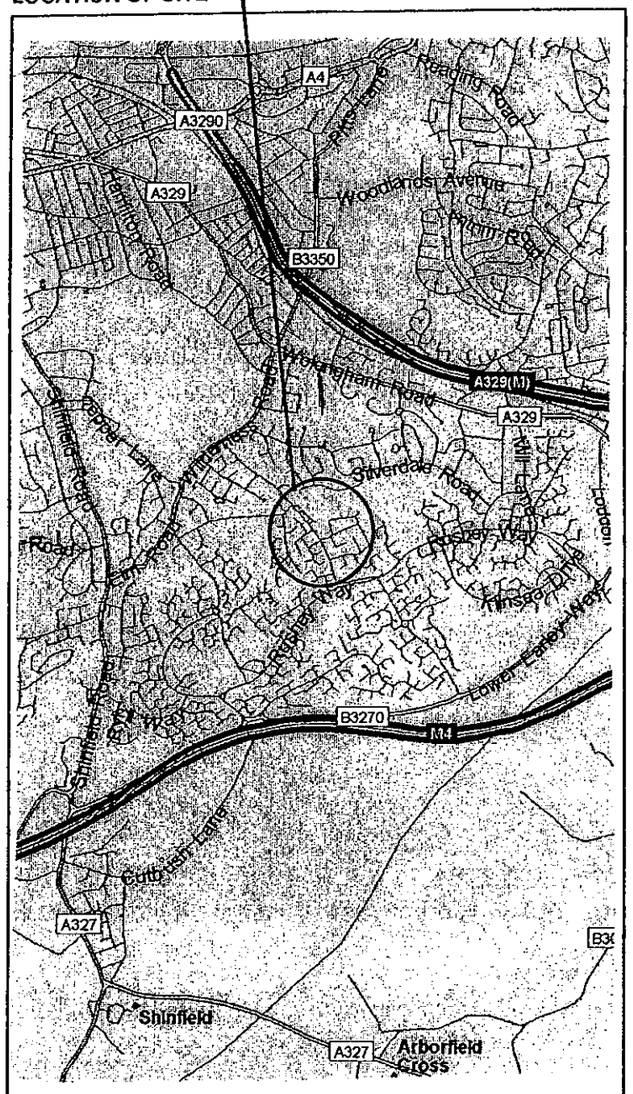

SITE LOCATION PLAN

LOCATION OF SITE

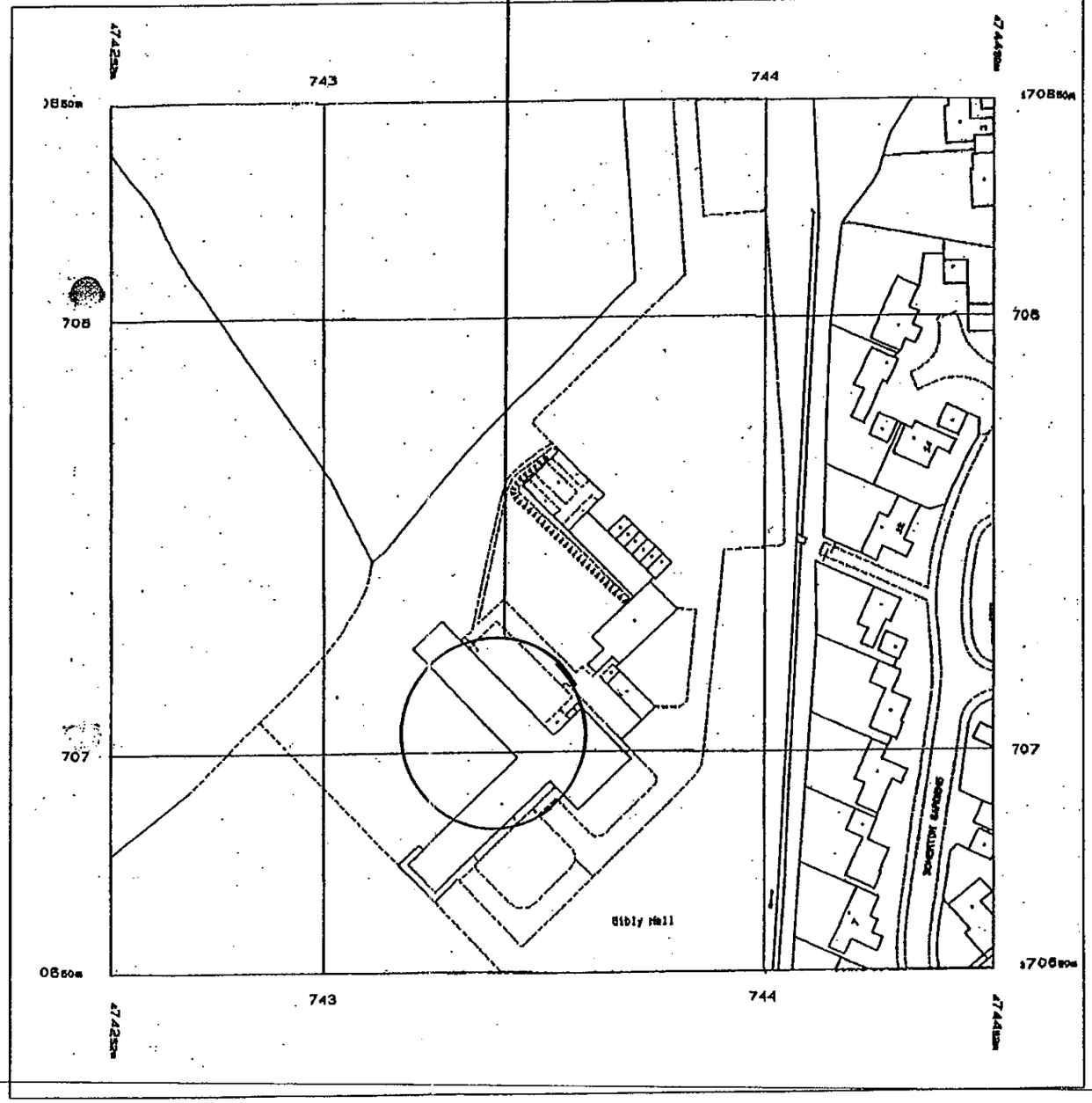

SITE BLOCK PLAN
(SCALE 1:1250)

0 10 20 30 40 50 60 70 80 90 100
0 2 3

GENERAL NOTES

This drawing is the Copyright of BTCellnet and must not be reissued, loaned or copied without written consent.
Use written dimensions only. Do not scale.

TL/2001/3279
2.2.01

Rev	Date	Description	Drw	Ckd

Ordnance Survey

This drawing is based upon the Ordnance Survey's 1:1250 map of 1996 with permission of the controller of Her Majesty's Stationery Office, Crown Copyright. Unauthorised reproduction infringes Crown copyright. © Crown Copyright 1998. Licence Number: AR 372684

Grantham Parsons and Nolan Ltd
Triumph House, Birmingham Road
Meriden, Nr. Coventry CV5 9AZ
Tel: (01676) 522866 Fax: (01676) 521081

BTcellnet
NETWORK IMPLEMENTATION

Project Title:
Cell 3611
Earley

Site Address:
Sibly Hall
Redhatch Drive
Earley
Reading
RG6 5QW

Grid Ref:
SU 7434 7071

Drawing Title:
Site Location Plans

Scale: As Shown
Drawn: RS
Date: 10/01/01
Checked: DJ

Drawing Number:
3611/001