30.OCT.2000* 2624

PROPOSED EQUIPMENT DIMENSIONS

APPLICANT:	ORANGE
CABIN TYPE:	2F
DIMENSIONS:	3436 x 3166 x 2704

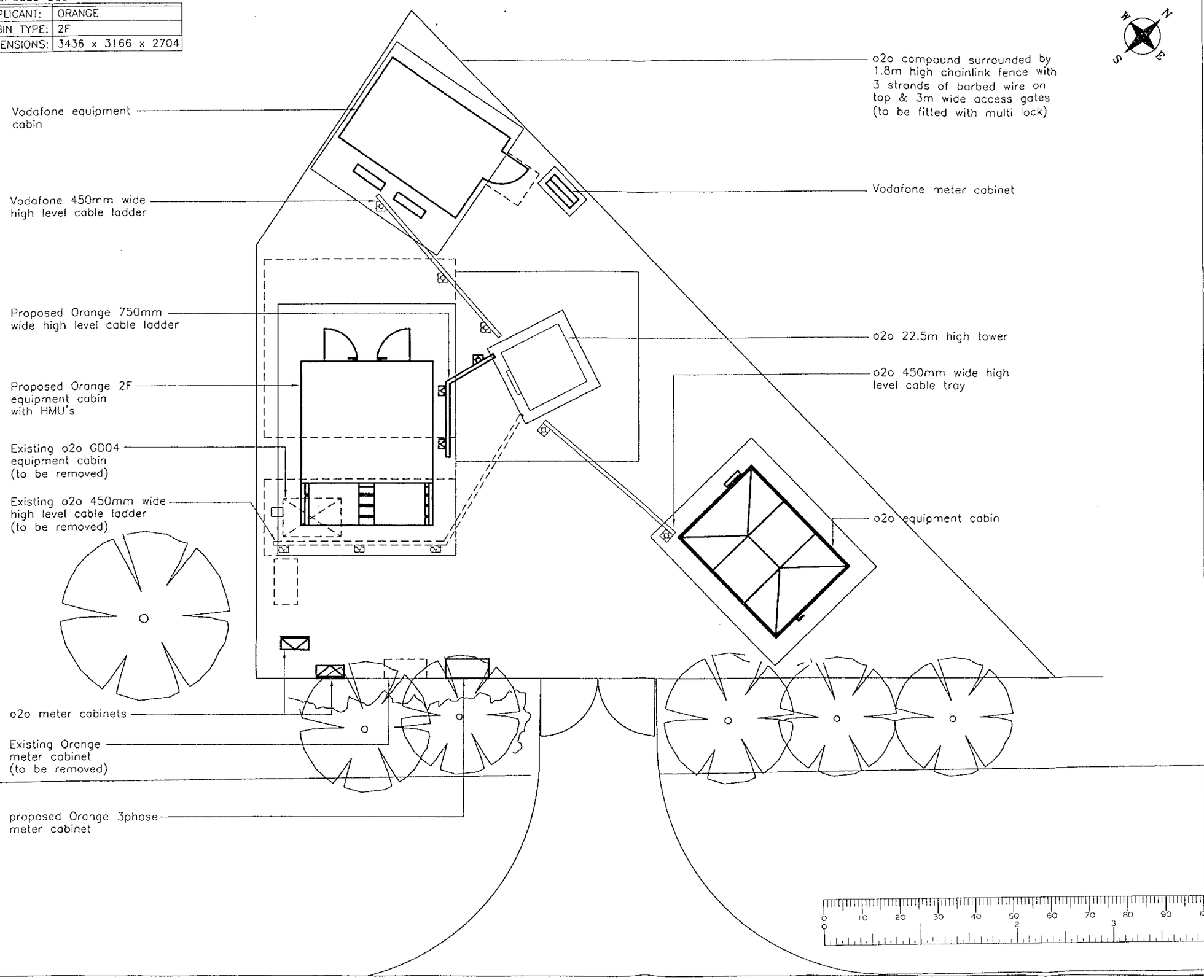

CROWN CASTLE INTERNATIONAL

NOTES

1) DO NOT SCALE DIMENSIONS

2) ALL DIMENSIONS IN MILLIMETRES UNLESS OTHERWISE STATED

SITE ADDRESS:
DUCKS NEST FARM
READING ROAD
ARBORFIELD
BERKSHIRE
RG2 9PJ

ONE2ONE REF:	91241
ORANGE REF:	BRK 119

Iss	Revision	Date	Drn	App
4	Orange cabin changed to 2F	05.10.00	LJ	
3	Orange upgrade	08.09.00	LJ	
2	As built. M.Powell Job No 1928/00	17.03.00	BJW	MP
1	1st Issue	03.10.99	DCY	PL

© This drawing is the property of CROWN CASTLE UK LIMITED and may not be reproduced or disclosed to a third party in any form without written permission

A·P·T

DUCKS NEST FARM

SITE LAYOUT

NGR: 476220/165900

Scale: 1/100 Date: 03.10.99
Drn: DCY App:

Drg No 17446.2.04/4

A3

Thu Oct 12 17:13:13 2000 (TIM) UNCONTROLLED COPY

OLD ~~SITE~~ APPLICATION

TL 118 11-11-98

30.OCT.2000* 2624

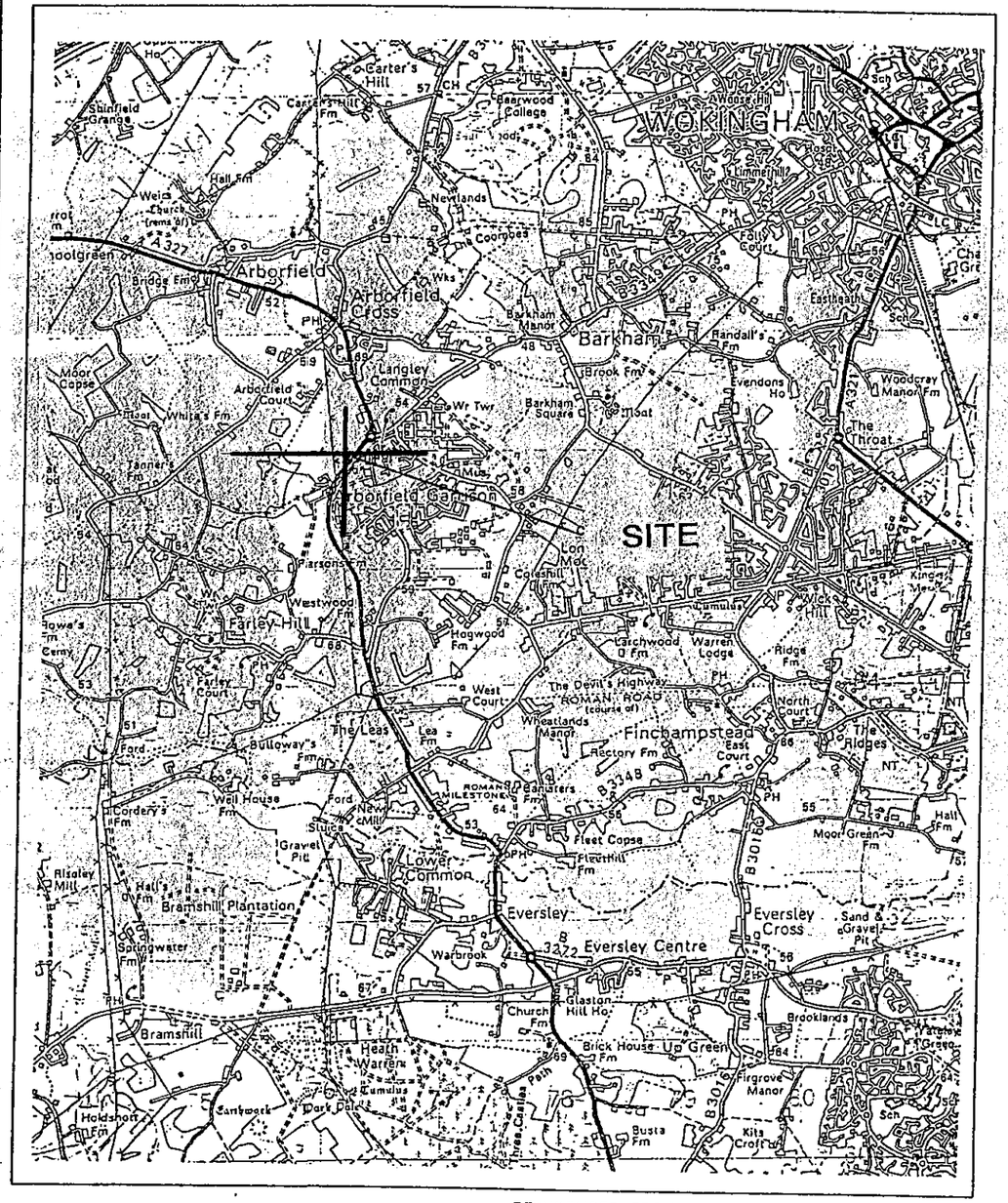

AREA MAP

REPRODUCED FROM OS SHEET NO.175 1996 1:50,000
WITH THE PERMISSION OF THE CONTROLLER, H.M.S.O. © CROWN COPYRIGHT.
CROWN CASTLE INTERNATIONAL LTD. LICENCE NO. AL 52065A0001.

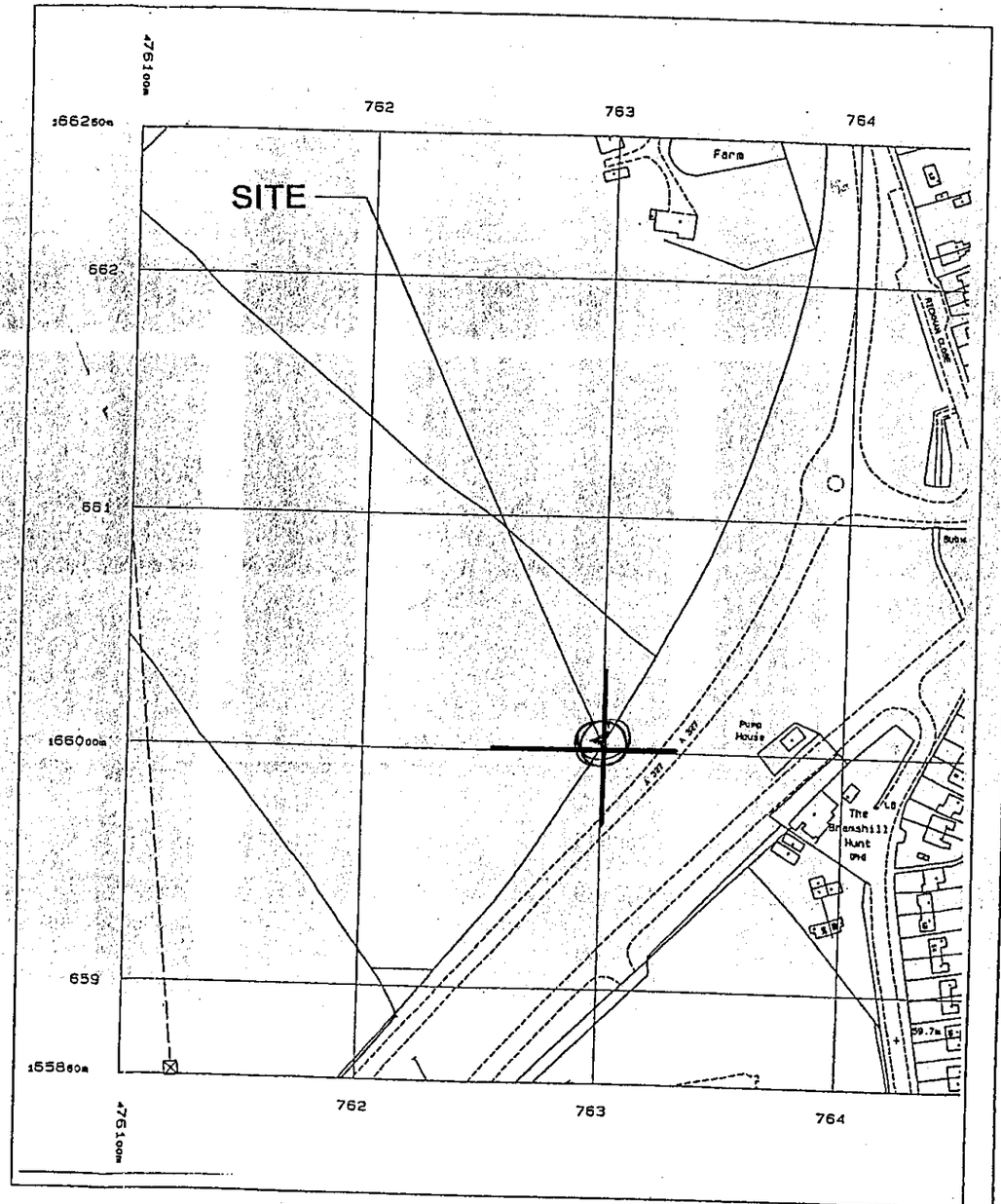

SITE MAP

REPRODUCED FROM OS SHEET NO.SU7666 1999 1:2500
WITH THE PERMISSION OF THE CONTROLLER, H.M.S.O. © CROWN COPYRIGHT.
CROWN CASTLE INTERNATIONAL LTD. LICENCE NO. AL 52065A0001.

0 10 20 30 40 50 60 70 80 90 100

CROWN CASTLE INTERNATIONAL

NOTES

1) DO NOT SCALE DIMENSIONS
2) ALL DIMENSIONS IN MILLIMETRES UNLESS OTHERWISE STATED

Iss	Revision	Date	Drn	App
1	Initial Issue	08.11.99	DCY	PL

© This drawing is the property of CROWN CASTLE UK LIMITED and may not be reproduced or disclosed to a third party in any form without written permission

Crown Castle International
PO Box 98
Warwick
CV34 6TN
TEL: 01926 416000 FAX: 01926 416600

DUCKS NEST FARM

AREA & SITE LOCATION MAPS

NGR: 476300166060

Scale: As shown Date: 03.10.99
Drn: DCY App: PL

Drg No 17446.2.04/1

A3

30.OCT.2000* 2624

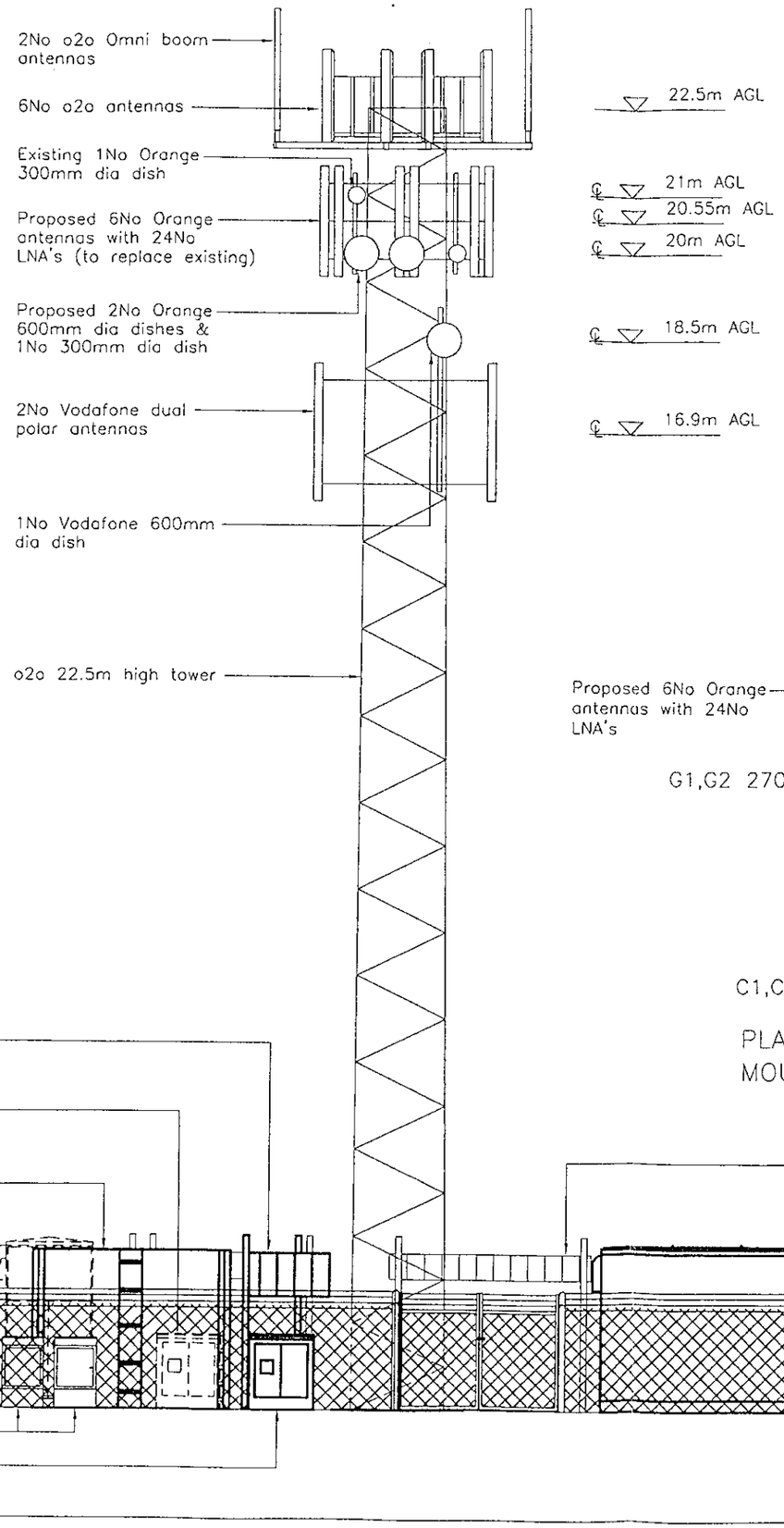

CELL No:	BRK119
SITE NAME	DUCKS NEST FARM
SITE ADDRESS	READING ROAD ARBORFIELD BERKSHIRE RG2 9PJ
NGR	476220/165900

ANTENNA DETAILS:

ITEM	FUNCTION	SECTOR	TYPE/SIZE	BRG	HT (MEAN)	TYPE OF FEEDER	LNA Y/N
A1/A2	Tx/Rx	A	85 SECTOR - DBDP	330°	20.55m	LDF5-50	Y
E1/E2	Tx/Rx	E	85 SECTOR - DBDP	30°	20.55m	LDF5-50	Y
B1/B2	Tx/Rx	B	85 SECTOR - DBDP	90°	20.55m	LDF5-50	Y
F1/F2	Tx/Rx	F	85 SECTOR - DBDP	150°	20.55m	LDF5-50	Y
C1/C2	Tx/Rx	C	85 SECTOR - DBDP	210°	20.55m	LDF5-50	Y
G1/G2	Tx/Rx	G	85 SECTOR - DBDP	270°	20.55m	LDF5-50	Y

DISH DETAILS:

DISH	SIZE	BEARING	HT (MEAN)	STATUS
D1	0.3m	TBA	21m	EXISTING
D2	0.3m	162.8°	20m	PROPOSED
D3	0.6m	67.8°	20m	PROPOSED
D4	0.6m	TBA	20m	PROPOSED

ALL BEARINGS MEASURED EAST OF GRID NORTH

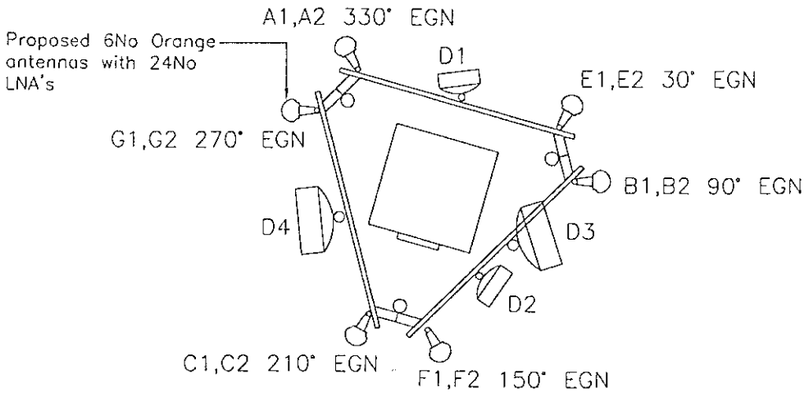

PLAN ON ORANGE ANTENNA/DISH MOUNTING CONCEPT @ 20.55m (NTS)

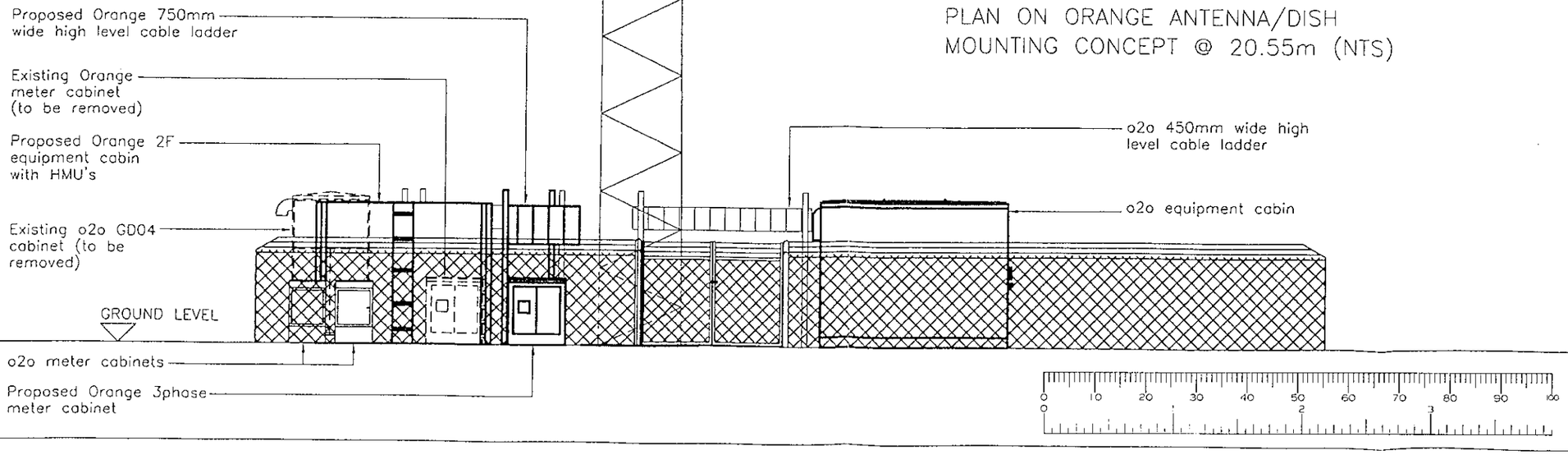

0 10 20 30 40 50 60 70 80 90 100

CROWN CASTLE INTERNATIONAL

NOTES

1) DO NOT SCALE DIMENSIONS

2) ALL DIMENSIONS IN MILLIMETRES UNLESS OTHERWISE STATED

SITE ADDRESS:
DUCKS NEST FARM
READING ROAD
ARBORFIELD
BERKSHIRE
RG2 9PJ

ONE2ONE REF:	91241
ORANGE REF:	BRK119

Iss	Revision	Date	Drn	App
5	Orange shown as 2F	05.10.00	LJ	
4	Orange upgraded	08.09.00	LJ	
3	Job No 2811/00	14.06.00	DS	CG
2	Initial Issue	23.05.00	DCY	CG
1	1st Issue	17.03.00	BJW	MP

© This drawing is the property of CROWN CASTLE UK LIMITED and may not be reproduced or disclosed to a third party in any form without written permission

A·P·T

DUCKS NEST FARM
BRK119

ORANGE INSTALLATION
SOUTH EAST ELEVATION

NGR: 476220/165900

Scale: 1/100 Date: 03.10.99
Drn: BJW App:

Drg No 17446.2.06/5

A3

THU OCT 12 17:13:29 2000 (TIM) UNCONTROLLED COPY