Door 'A'

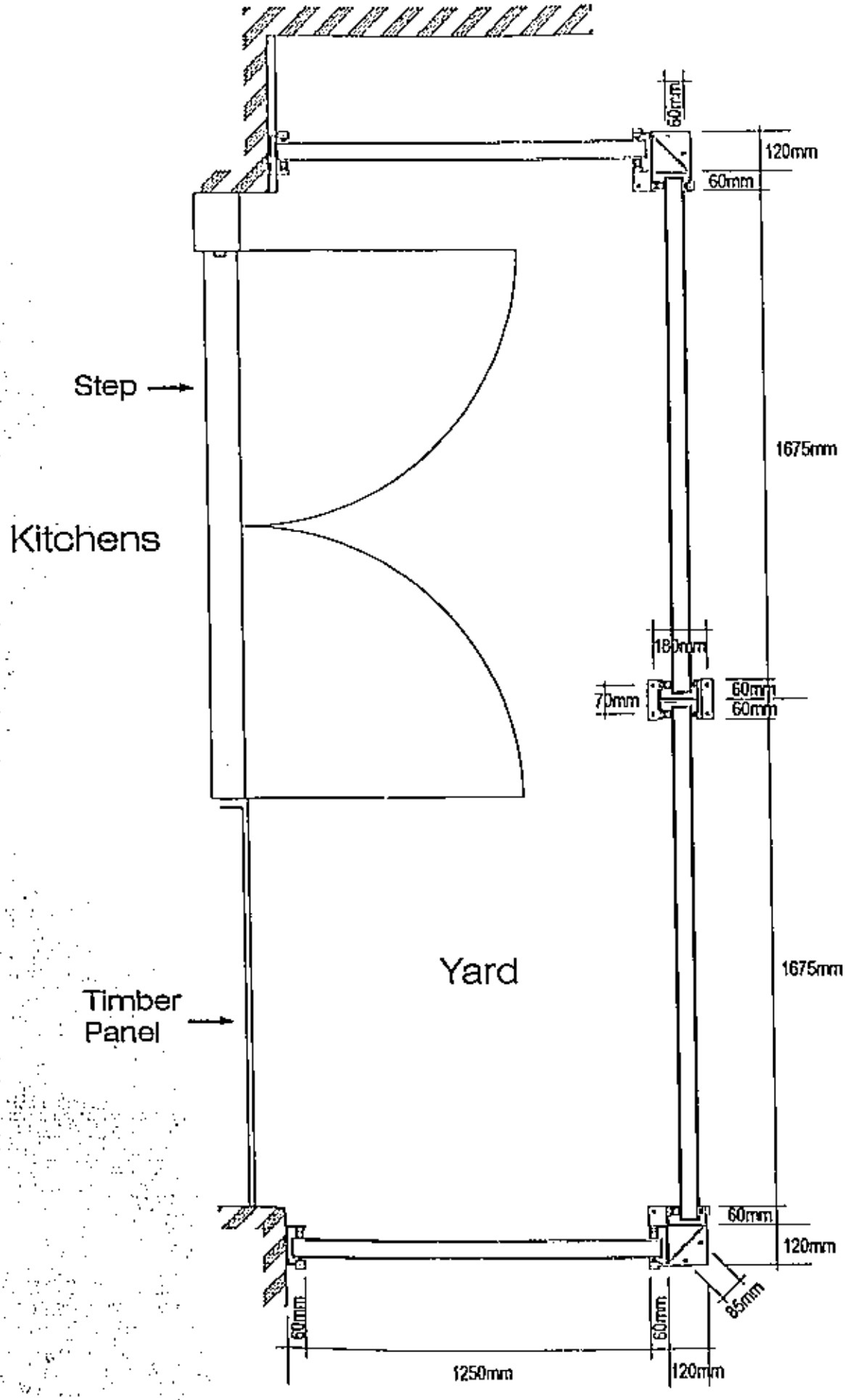

6000-1191/1

RECEIVED - 5 JUL 2002

01.AUG.2002 7079

Door 'A'

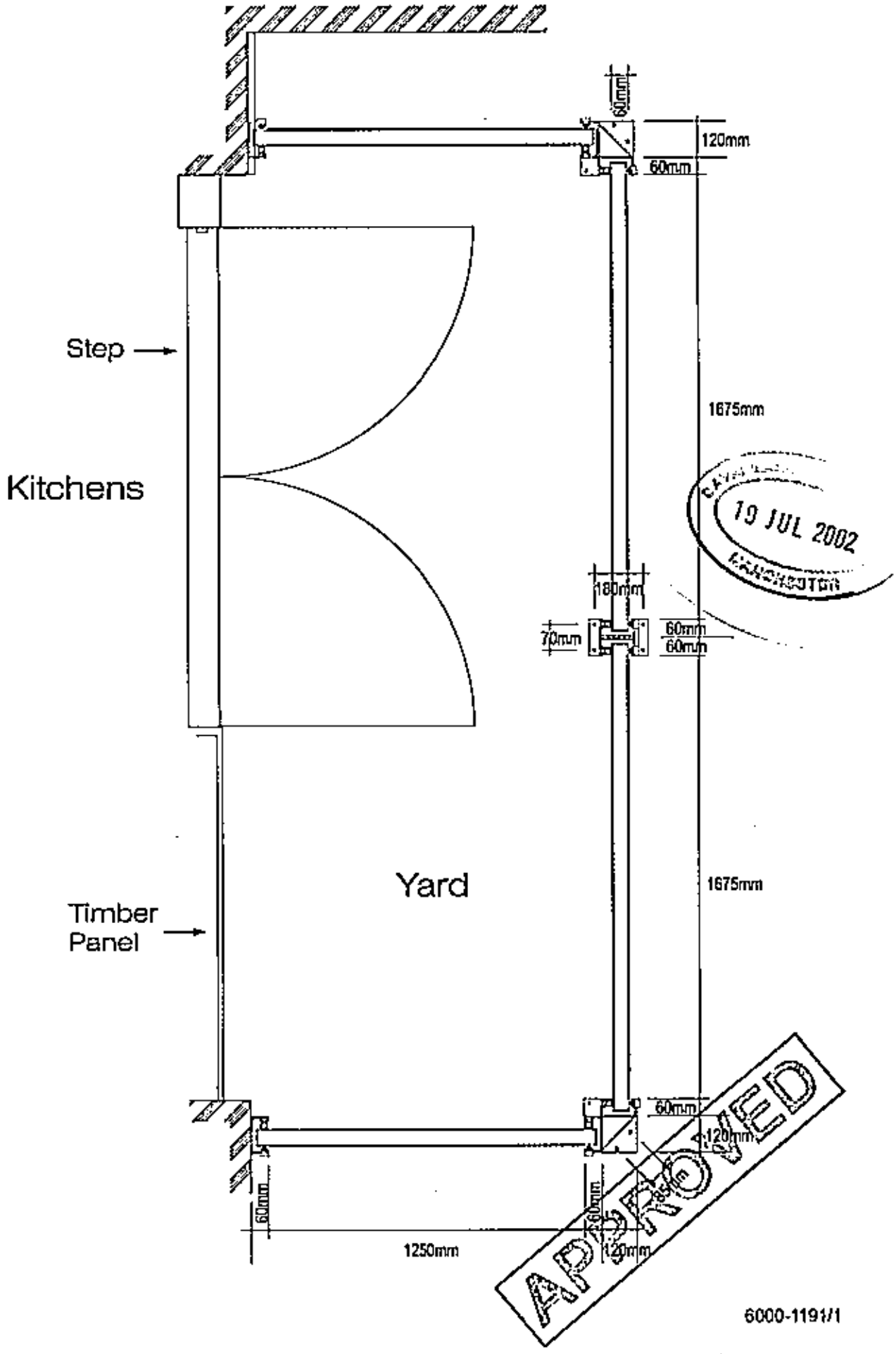

6000-1191/1

Door 'B'

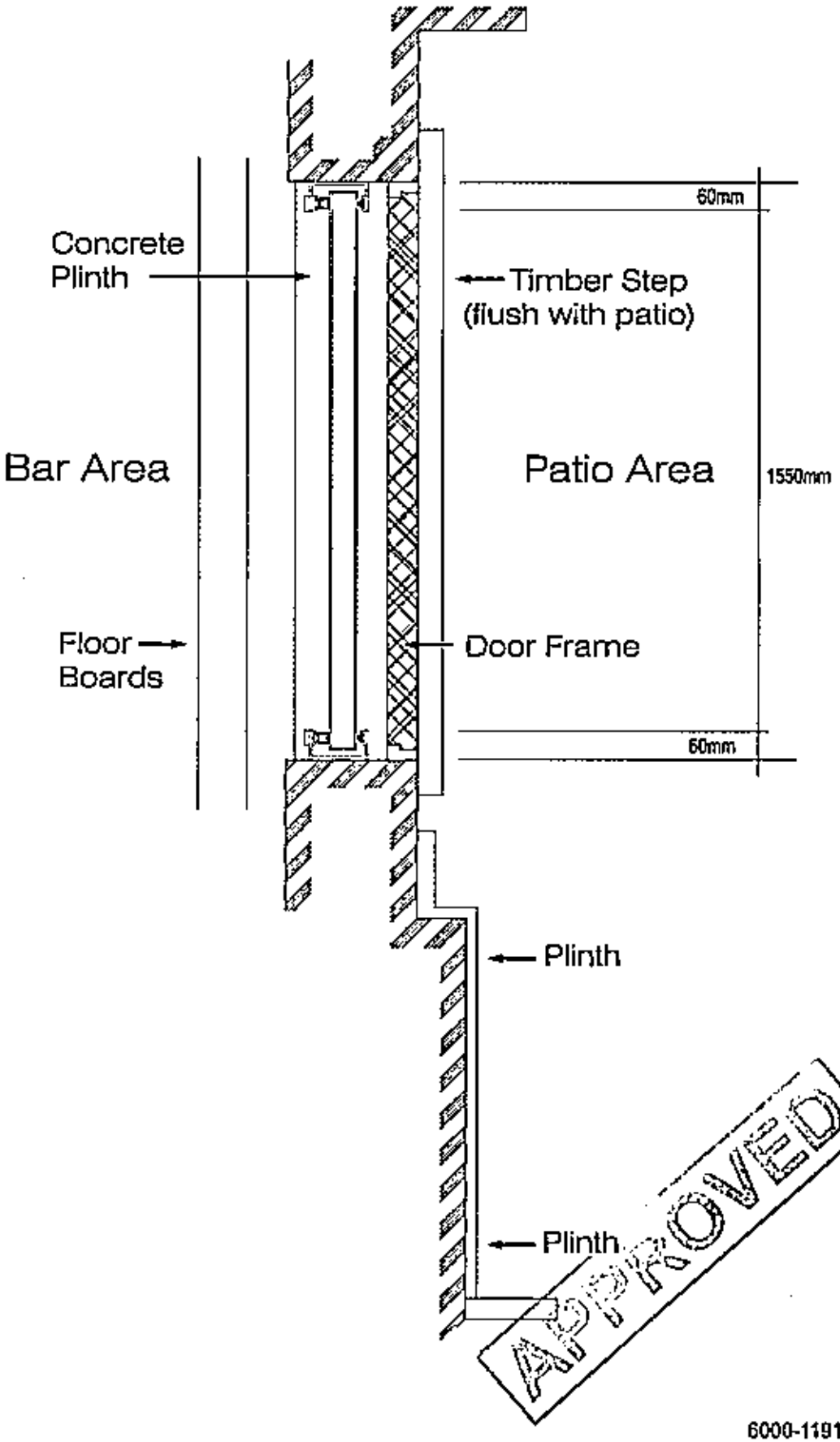

6000-1191/2

Door 'C'

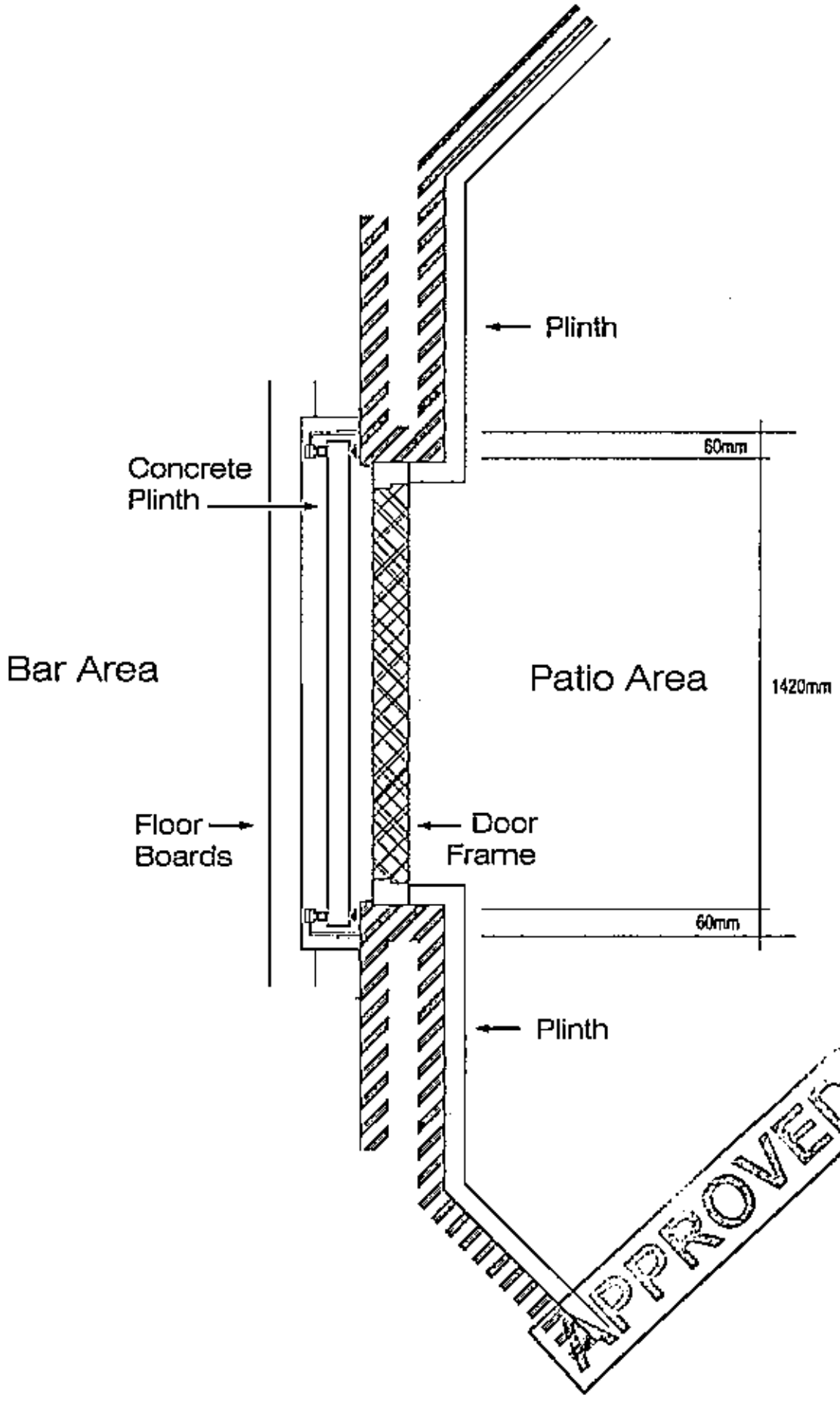

6000-1191/3

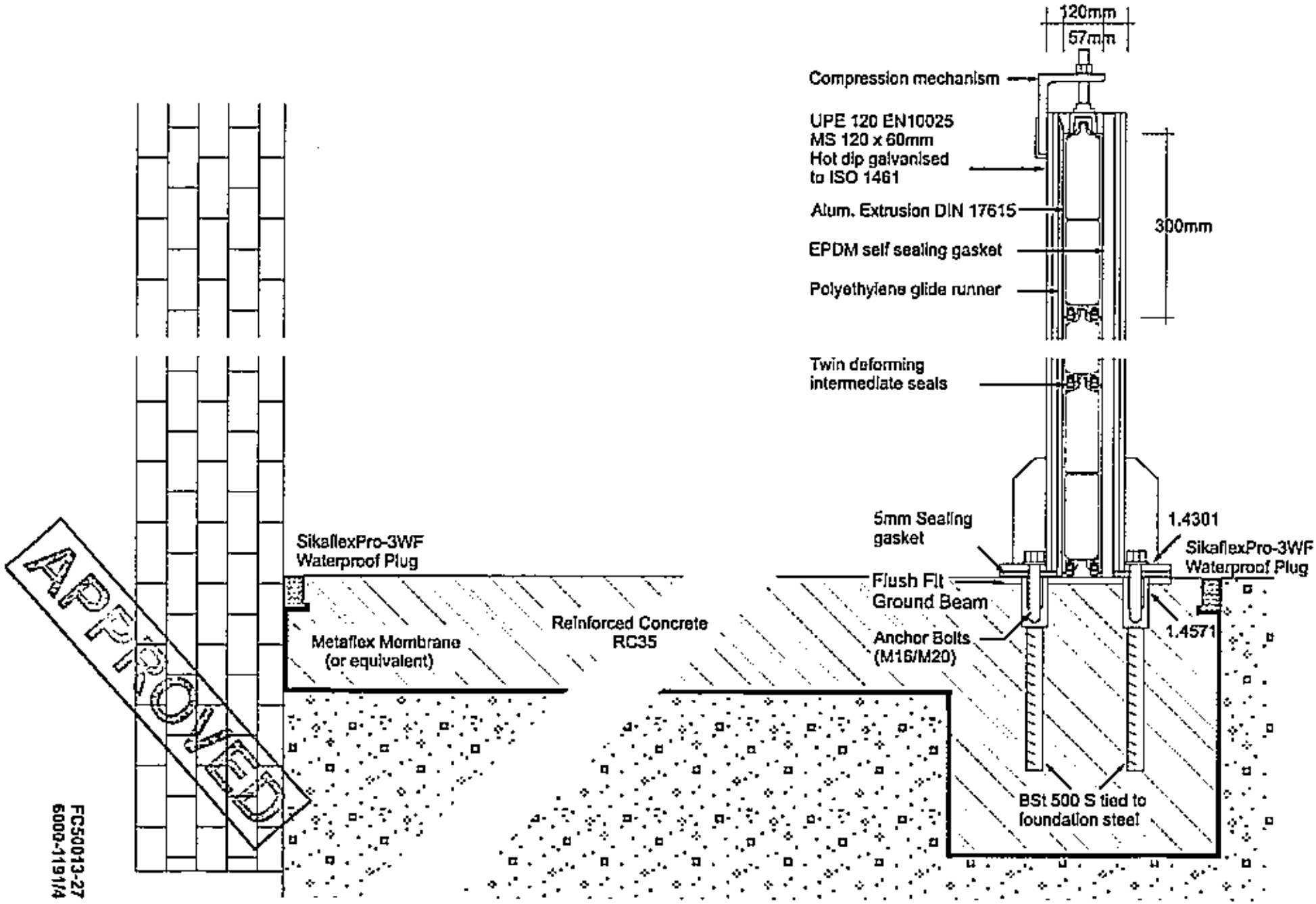

FC50013-27
6000-119/f4

Proposed Slab/Foundations/Removable Central Support - Poachers Inn

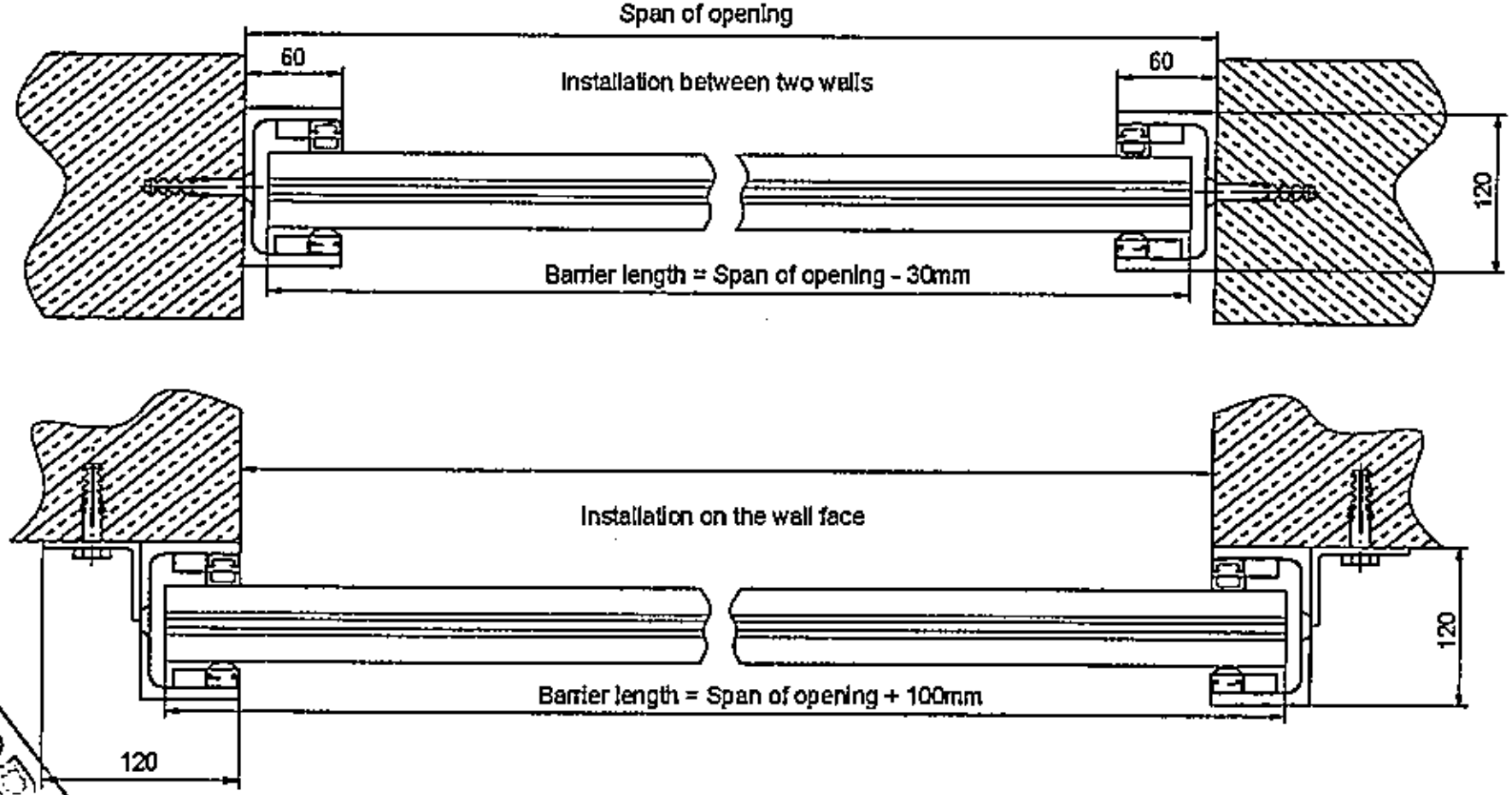

APPROVED

Usage Type: High Water Systems	Tolerance: ISO 2768-mk	Scale	Weight
		Basic Product, Semi-Manufactured / Raw Material / Model or Die: Installation Diagram	
1 Flood Guard	2001 Date Name	Name: Mounting options	
	Proc. 29.03 JAS		
	Cert.		
	Stand.		
		Drawing Number: 5008.09a	Format
Occ. Modification Date Nam	Original	© Flood Control Limited. All rights reserved.	

Single Airbrick Cover

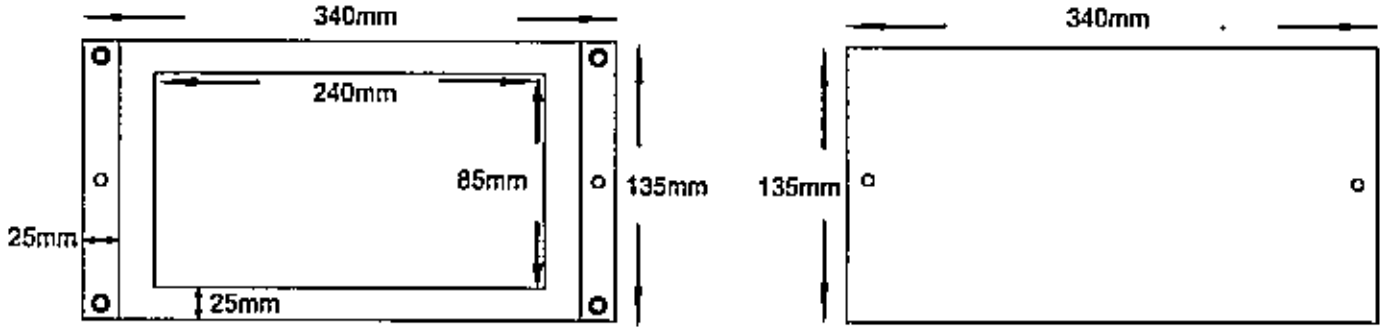

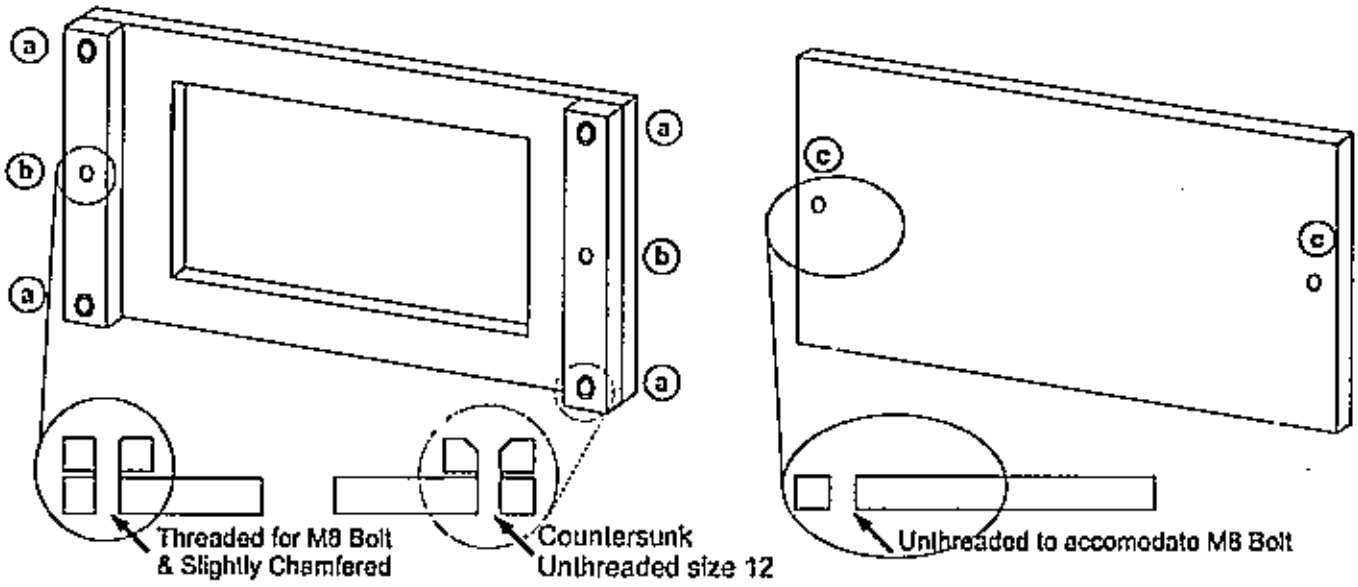

(a) Unthreaded countersunk for size 12 screws..

(b) Threaded Holes for M8 bolt - Slightly Chamfered.

(c) Unthreaded for size M8 bolts.

Usage Type: High Water Systems		Tolerance: ISO 2768-mk		Scale: Not to Scale	Weight:
				Basic Product, Semi-Manufactured Raw Material Model or Die: Single brick	
1 Flood Seal		1999	Date / Name	Name: Single Air Brick Cover Dimensions	
		Proc.	11.01 / RS		
		Cert.			
		Stand.			
Occ.	Modification / Date / Name	Original		Drawing Number: 4000.23c	Format:

APPROVED

© Flood Control Limited. All rights reserved. Not to be reproduced without permission.

SU7670SE

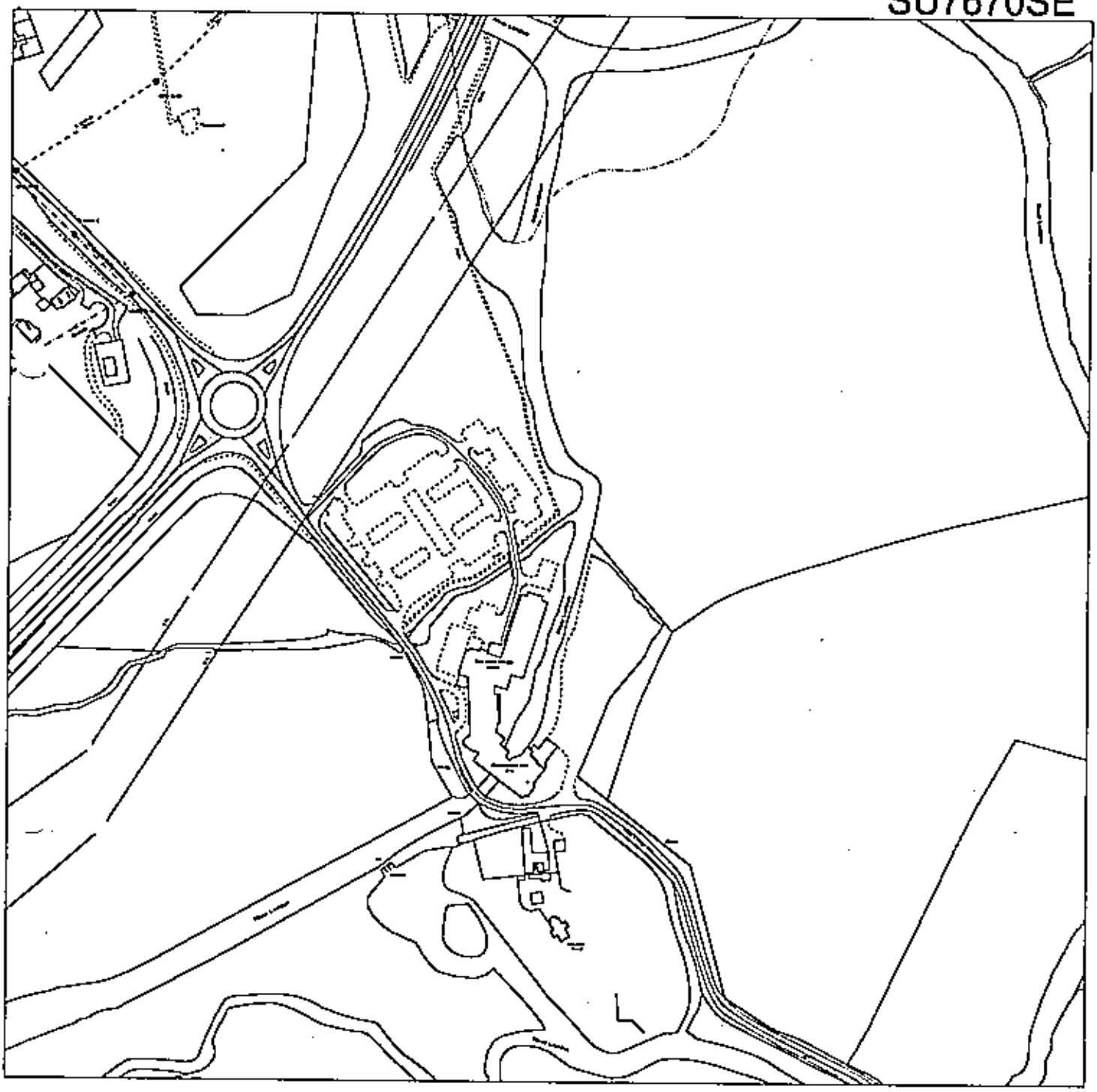

SEWERAGE ASSET ABBREVIATIONS

MANHOLES:
- COMBINED
- FOUL
- SURFACE
- PROPOSED
- JOINT
- BACKDROP
- OTHER / UNKNOWN MANHOLE
- ABANDONED

SEWERS:
- PRIVATE COMBINED
- PRIVATE FOUL
- PRIVATE SURFACE
- PUBLIC COMBINED
- PUBLIC FOUL
- PUBLIC SURFACE
- TRUNK COMBINED
- TRUNK FOUL
- TRUNK SURFACE
- RISING COMBINED
- RISING FOUL
- RISING SURFACE
- RISING SLUDGE
- STORM OVERFLOW
- HIGHWAY DRAIN/GULLEY
- GALLERY
- TRADE EFFLUENT
- BIO-SOLIDS (SLUDGE)
- CULVERTED WATERCOURSE
- VENT PIPE
- ABANDONED
- PROPOSED
- UNKNOWN / OTHER SEWER

NOTE:
1. ALL LEVELS ARE TO ORDNANCE DATUM NEWLYN
2. ALL MEASUREMENTS ARE METRIC.
3. ARROWS OR FLECKS INDICATE DIRECTION OF FLOW.
4. "A" OR "ABANDONED" INDICATE ABANDONED ASSET.

Issued in compliance with Statutory requirement.
Copyright © Thames Water 2000.
This map and its contents are protected by copyright and may not be copied or sold.

Thames Water Utilities
Rose Kiln Court
Rose Kiln Lane
Reading Berks RG1 8DB

PLEASE DIRECT QUERIES TO (PLEASE CONTACT)
Technical Information Center
Thames Water Court
Rose Kiln Lane
Reading
Berkshire
RG
Tel: 0118 9281434

MAP CENTRE
EAST 478787
NORTH 170449
SCALE 1:1250

THE POSITION OF APPARATUS SHOWN ON THIS PLAN IS GIVEN SOLELY TO BE CONSIDERED AT THE TIME OF PREPARATION, BUT ALL WARRANTIES EXPRESS OR IMPLIED ARE EXCLUDED. THE ACTUAL POSITIONS OF STRUCTURES, SERVICE AND PRIVATE CONNECTIONS, MAINS AND ANY ASHTANK MUST BE SATISFIED ON SITE.

BASED ON THE ORDNANCE SURVEY MAP WITH THE PERMISSION OF THE CONTROLLER OF H.M. STATIONERY OFFICE. LICENCE NUMBER WU268547

COPYRIGHT UNAUTHORISED REPRODUCTION PROHIBITED

ISSUE DATE
23/05/02 08:11

ISSUED BY
rogjoh

SU7670SE

Door 'A'

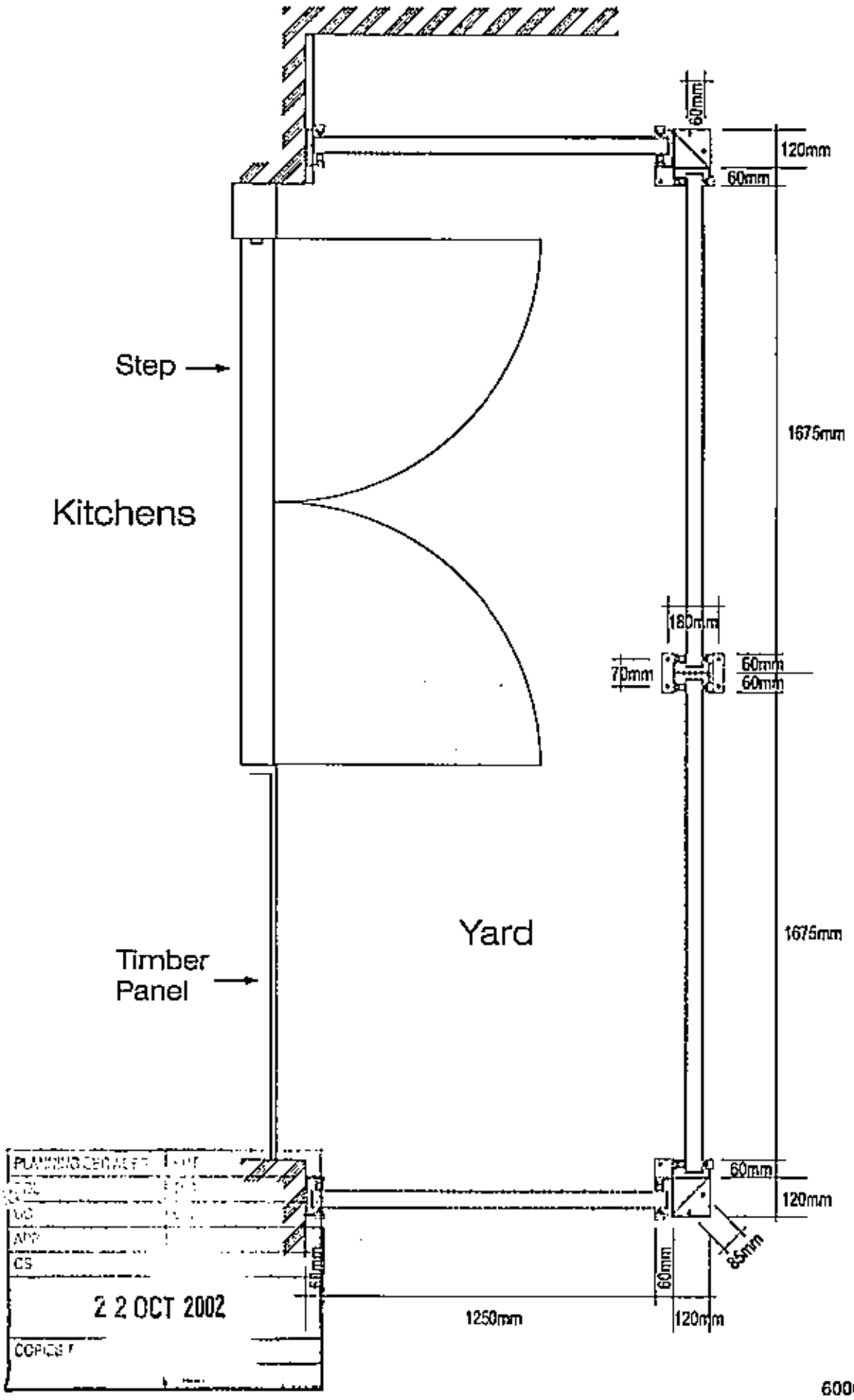

6000-1191/1

Door 'B'

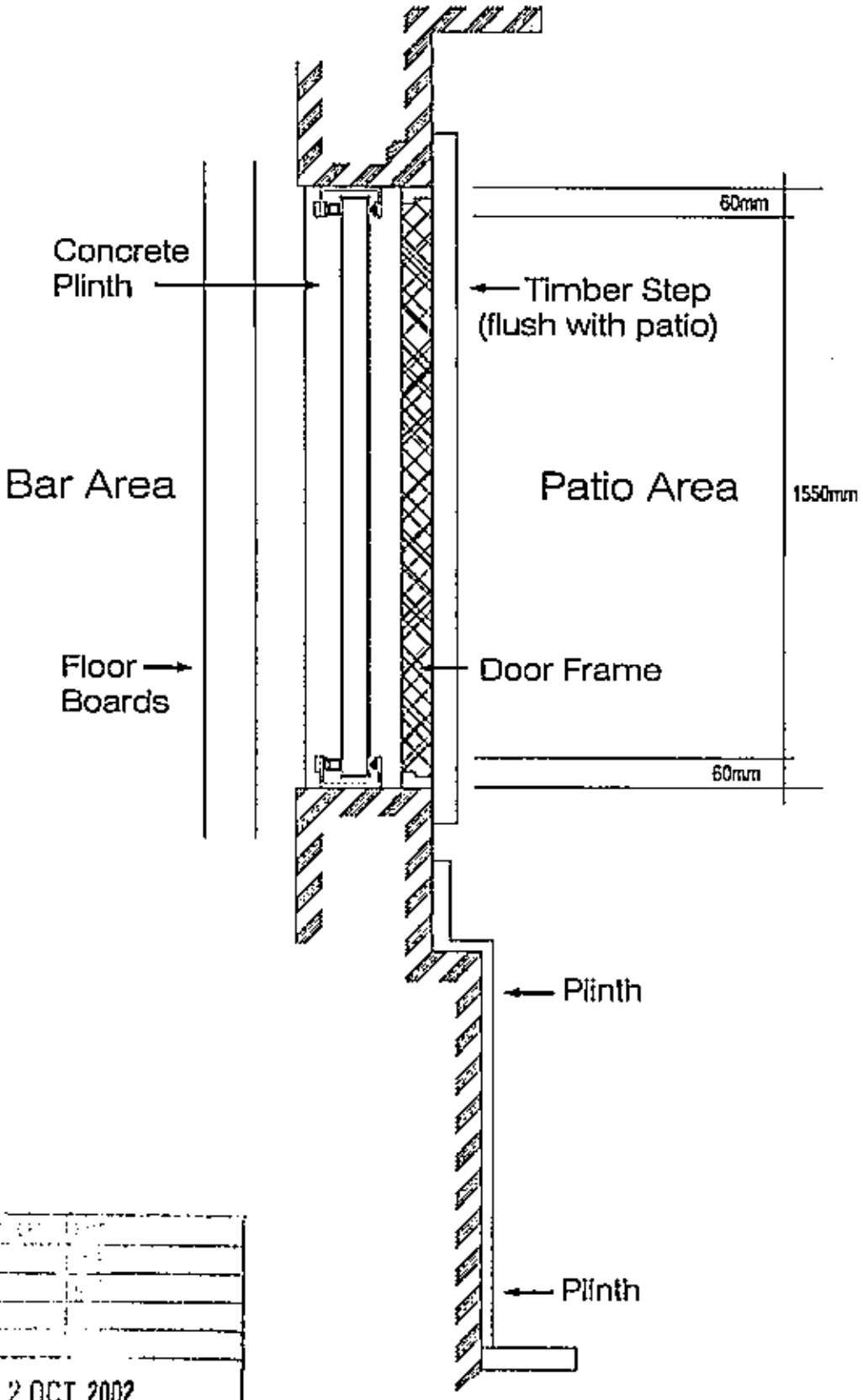

22 OCT 2002

COPIES TO:

6000-1191/2

Door 'C'

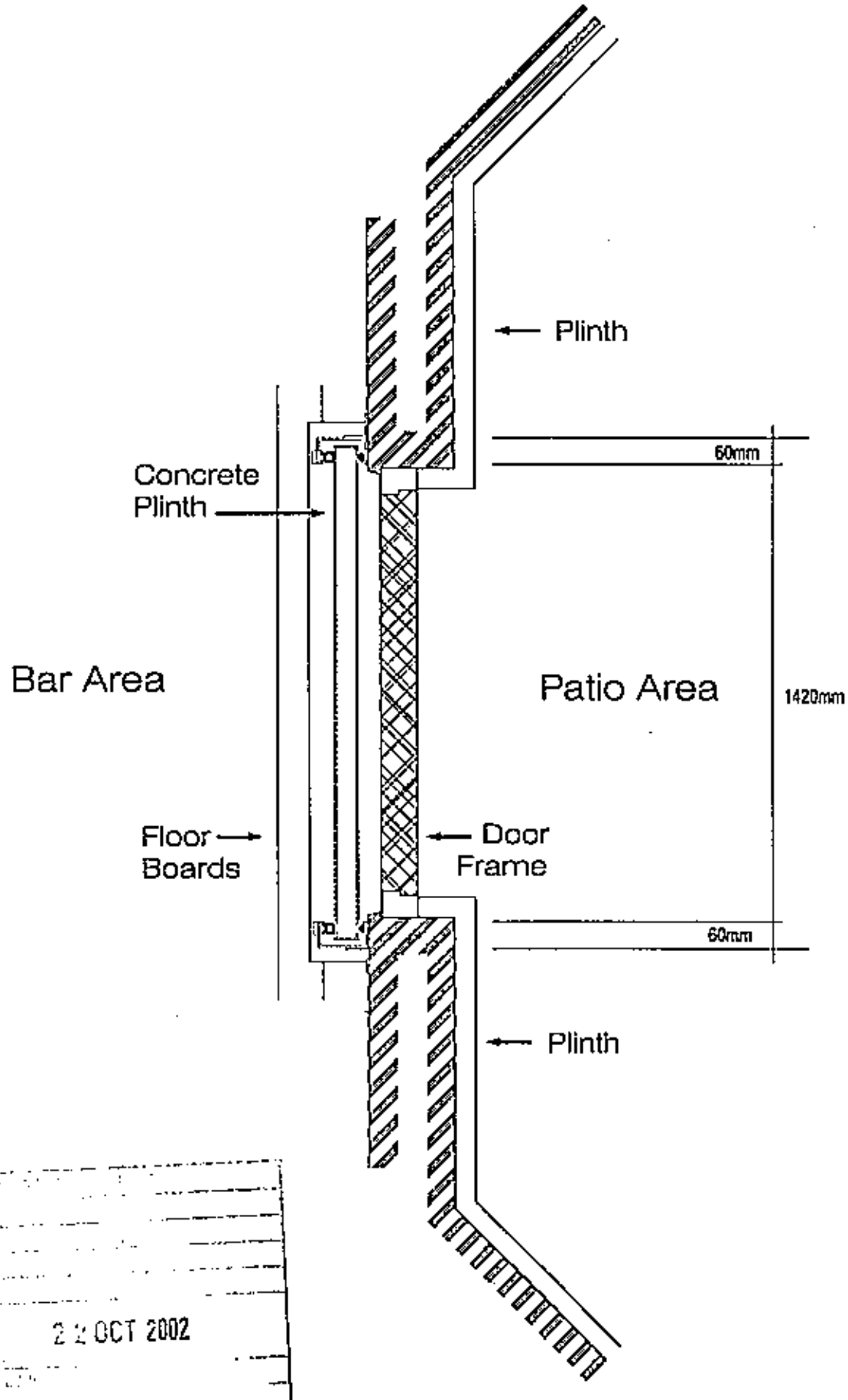

22 OCT 2002

6000-1191/3

Door 'B'

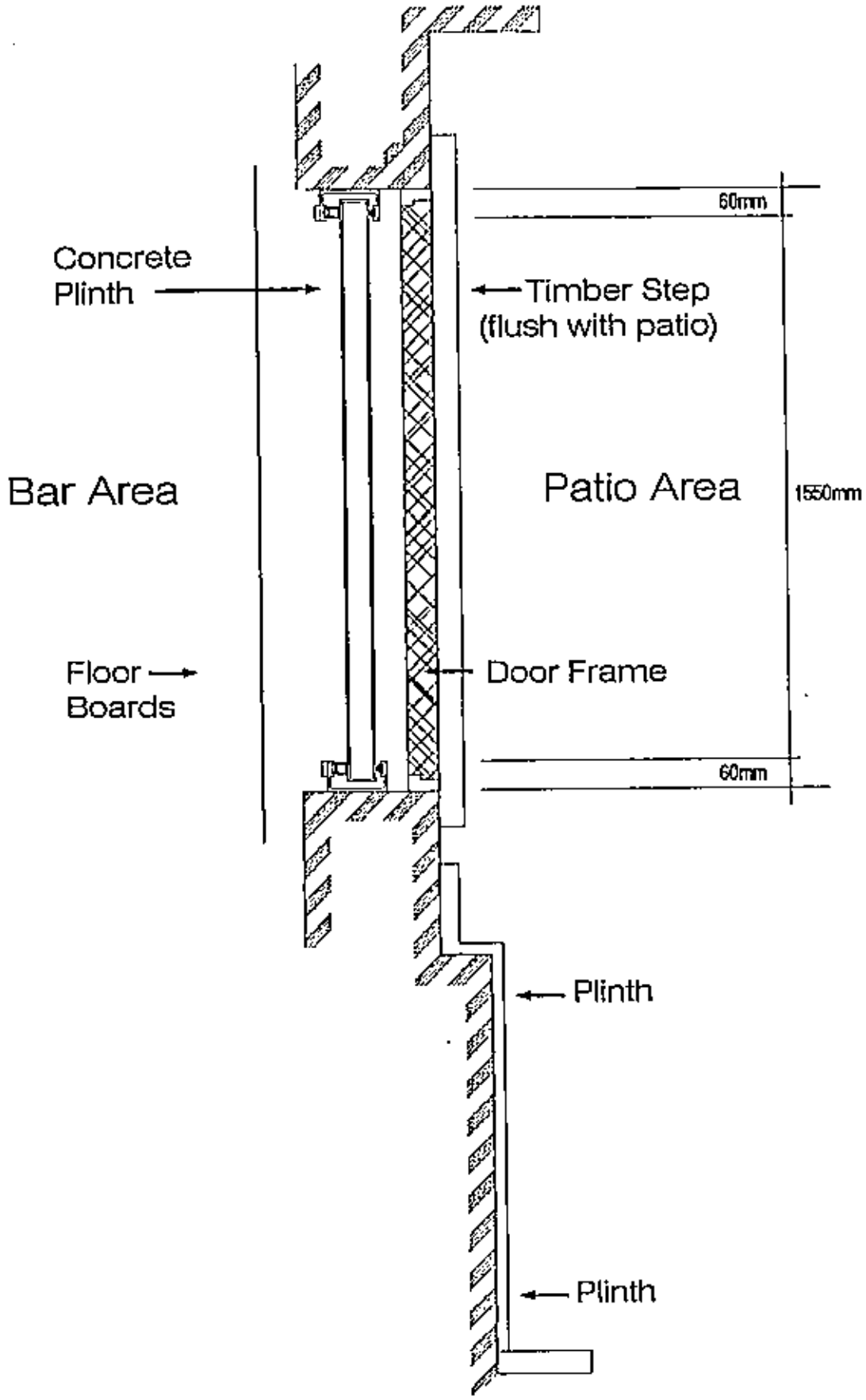

6000-1191/2

Proposed Slab/Foundations/Removable Contral Support - Poachers Inn

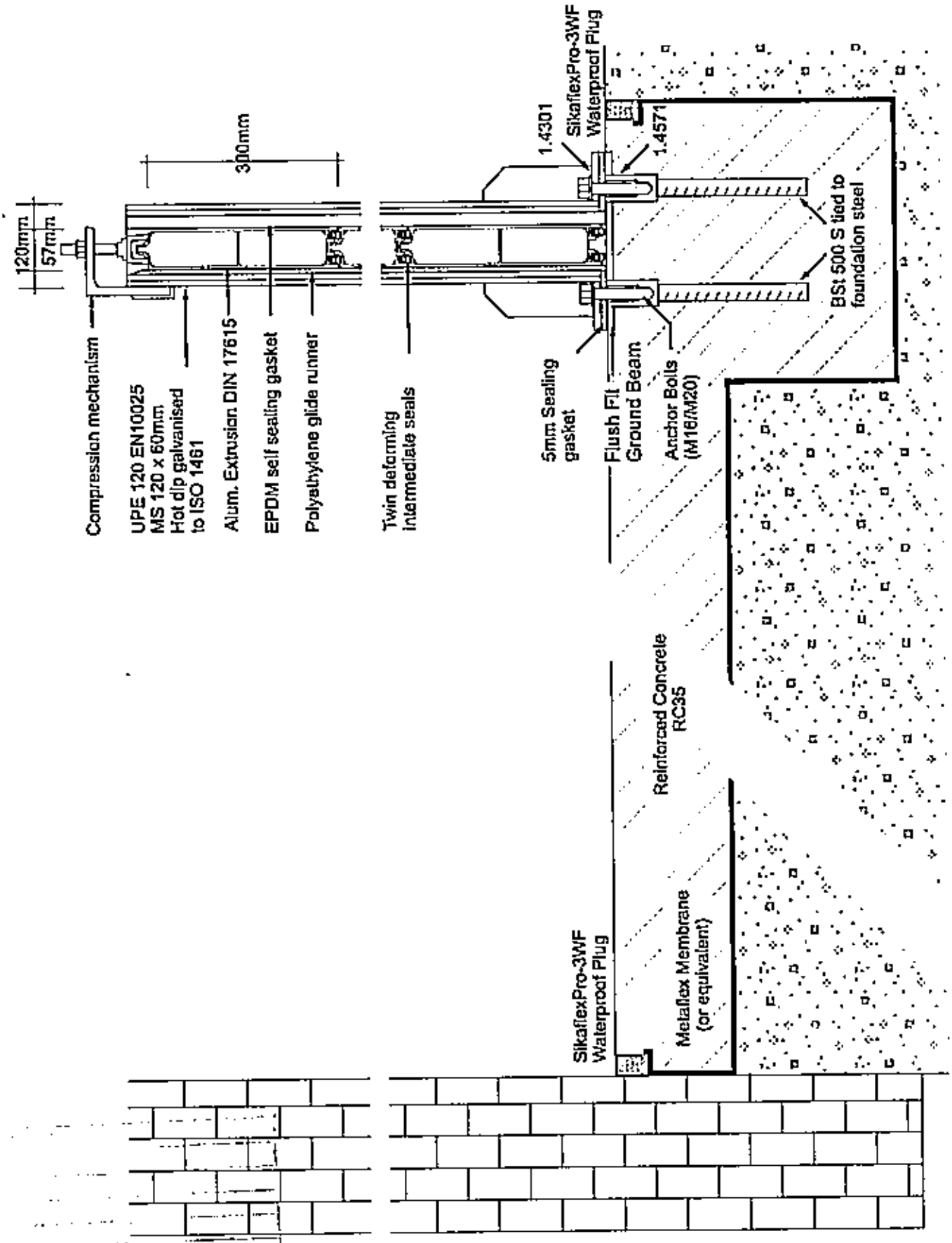

22 OCT 2002

FC50013-27
6000-1191/4

Poachers Inn - Door 'A' Kitchen

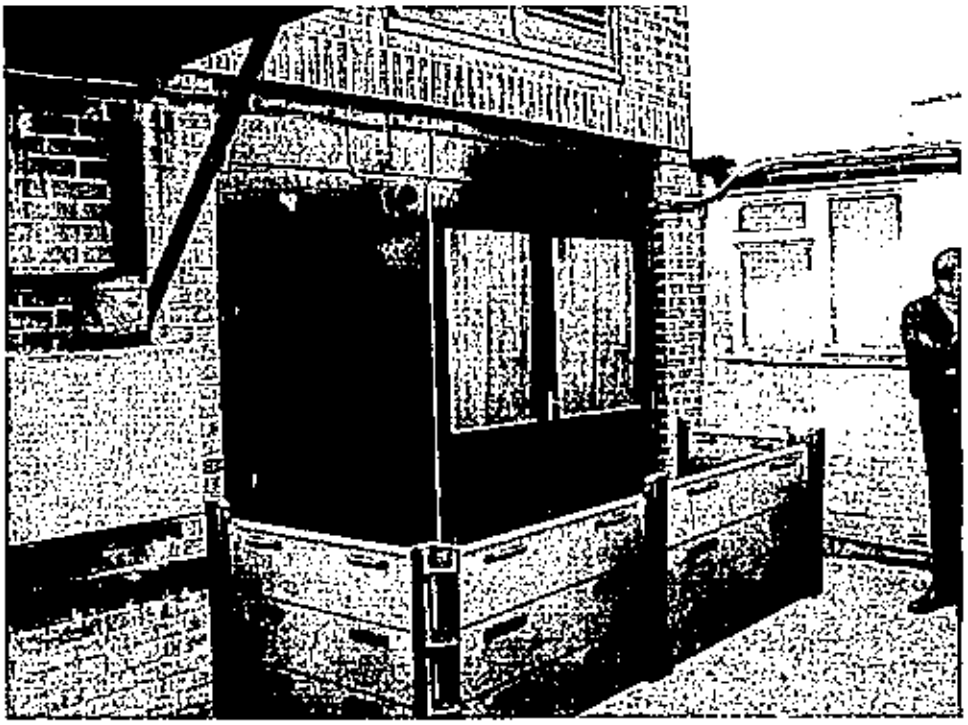

Flood Guards - flood conditions

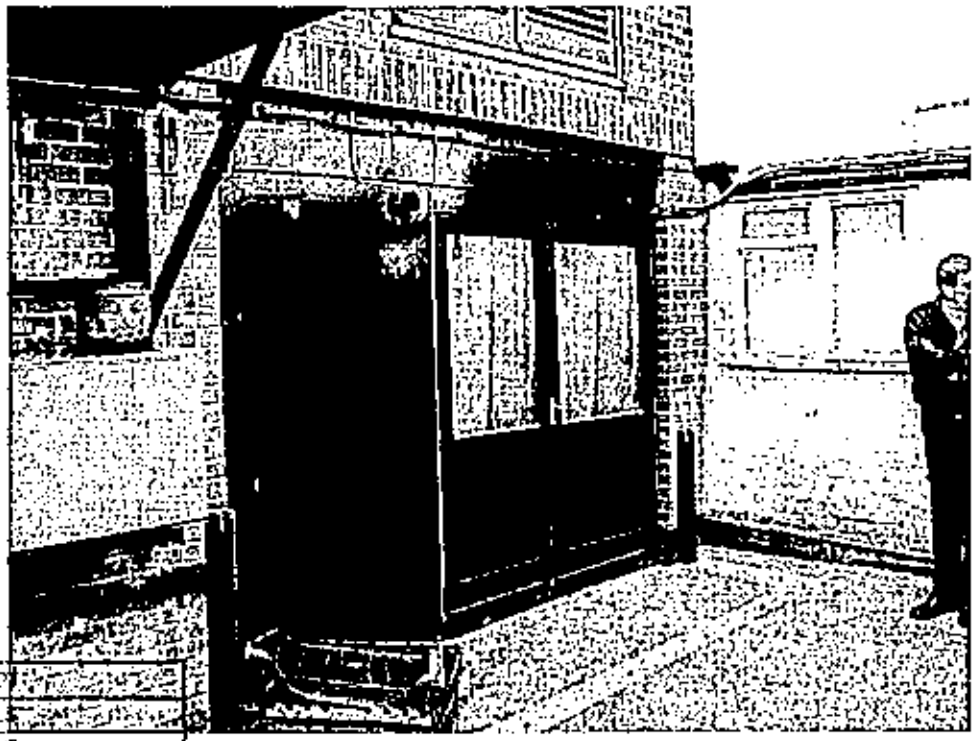

Flood Guards - normal conditions

PLANNING SERVICES
22 OCT 2002

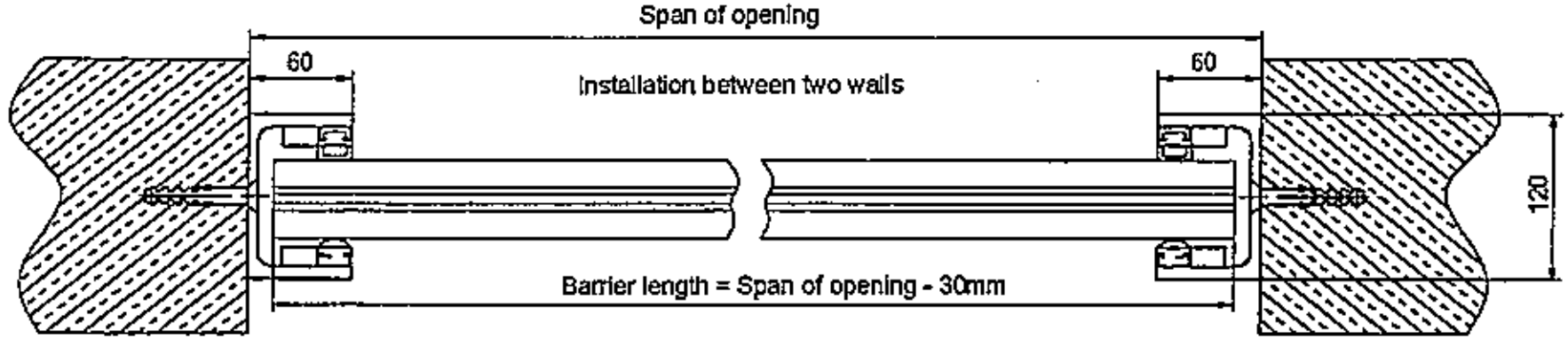

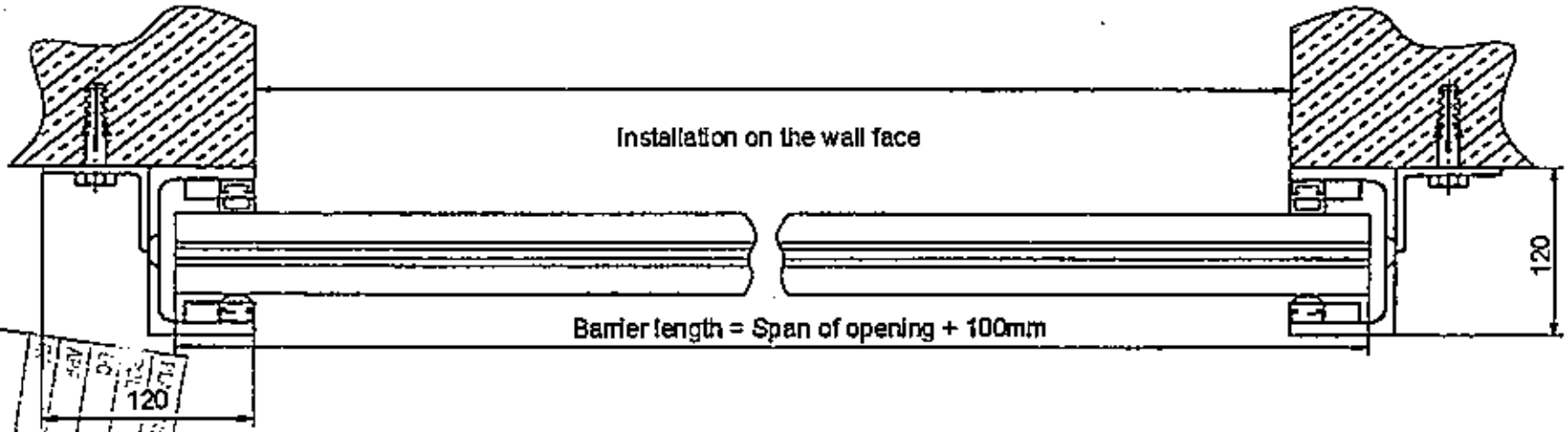

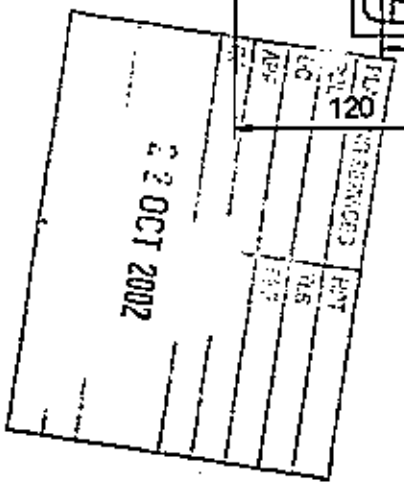

Usage Type: High Water Systems	Tolerance: ISO 2768-mk	Scale	Weight
		Basic Product, Semi-Manufactured / Raw Material / Model or Die	Installation Diagram
1 Flood Guard	2001 Date Name	Name	Mounting options
	Proc. 29.03 JAS		
	Cert.		
	Stand.	Drawing Number	Format
		5008.09a	
Occ. Modification Date Nam Original		© Flood Control Limited. All rights reserved.	

Single Airbrick Cover

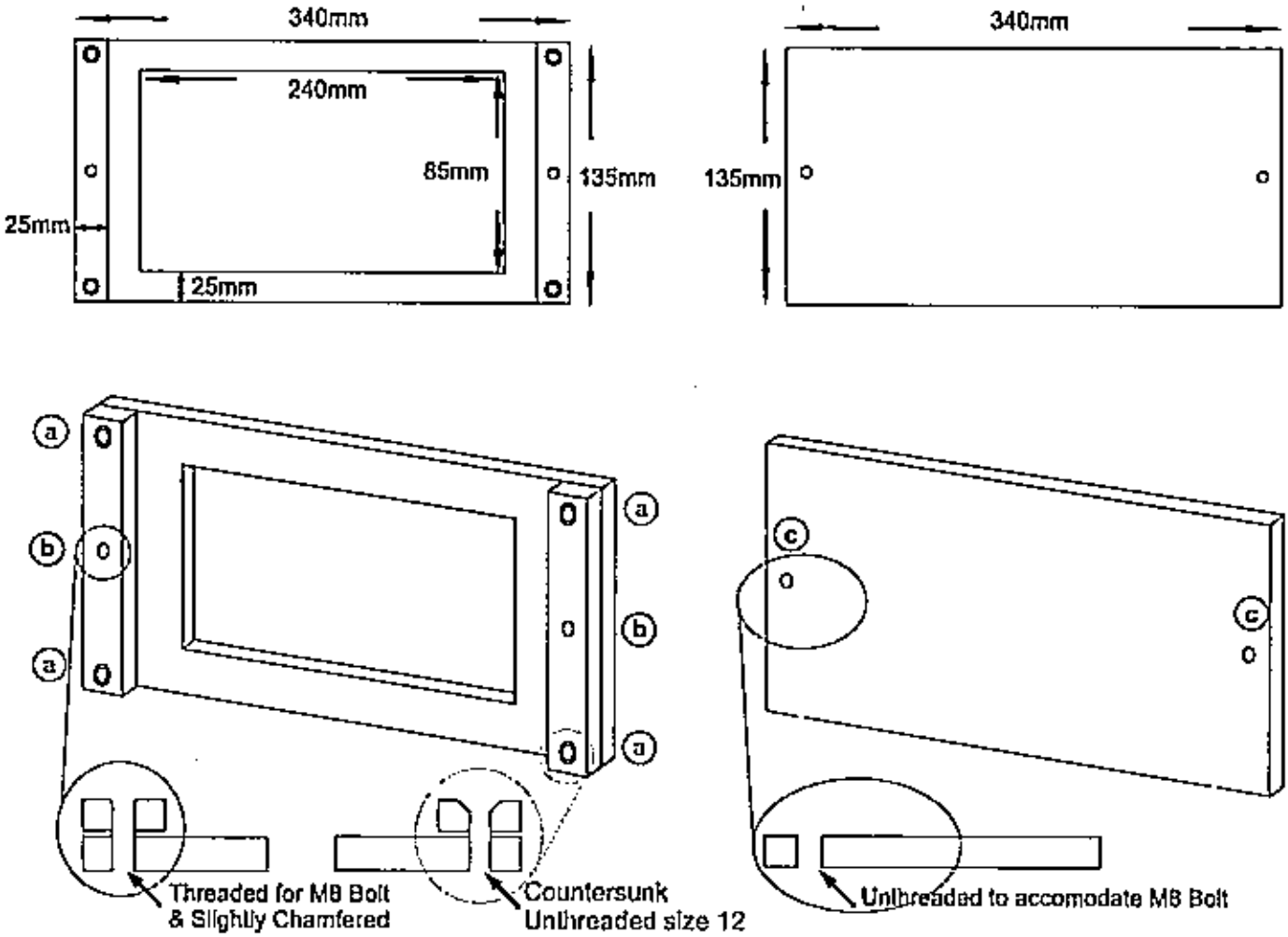

(a) Unthreaded countersunk for size 12 screws..

(b) Threaded Holes for M8 bolt - Slightly Chamfered.

(c) Unthreaded for size M8 bolts.

PLANNING SERVICES	HPF
CCL	TLS
GC	ENF
APF	
22 OCT 2002	

Usage Type	Tolerance			Scale Not to Scale Weight
High Water Systems	ISO 2768-mk			Basic Product, Semi-Manufactured Raw Material Model or Die Single brick
1 Flood Seal		1999	Date	Name
		Proc.	11.01	RS
		Cert.		Name Single Air Brick Cover Dimensions
		Stand.		
				Drawing Number 4000.23c Format
Occ. Modification	Date	Nam	Original	

© Flood Control Limited. All rights reserved. Not to be reproduced without permission.

Waiver:

This data sheet is for guidance only and must not be used for proper working drawings. Please contact Stannah Lifts for particular details before proceeding. Owing to our policy of continual improvement we reserve the right to alter specifications and dimensions without prior notice.

For guidance only

MIDILIFT PX

Wheelchair
Vertical Lifting Platform 1100 x 1400 (Up to 4m Travel)
Through and Same Side Entry/Exit

Stannah Lifts

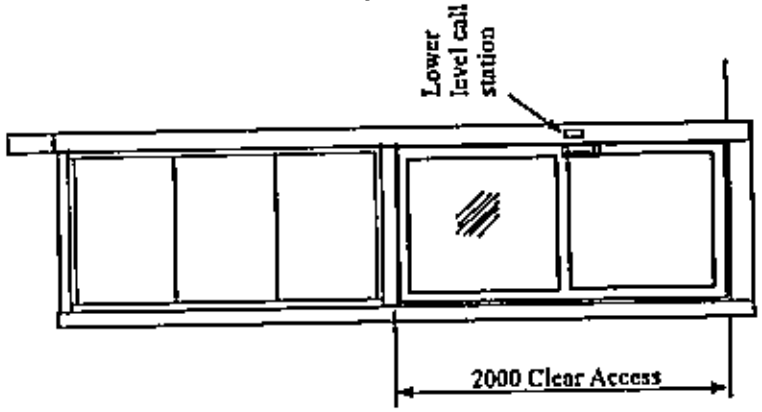

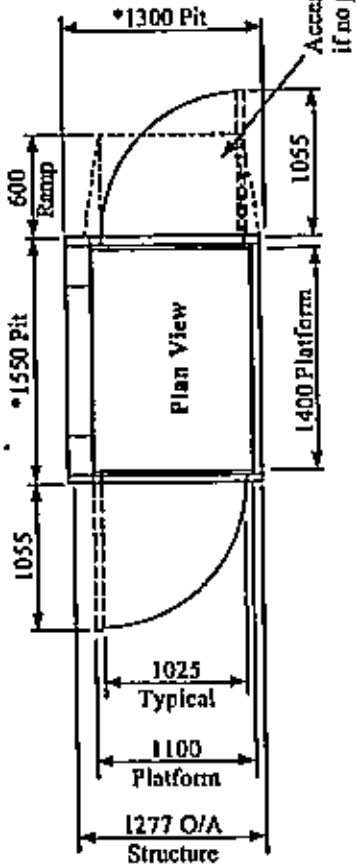

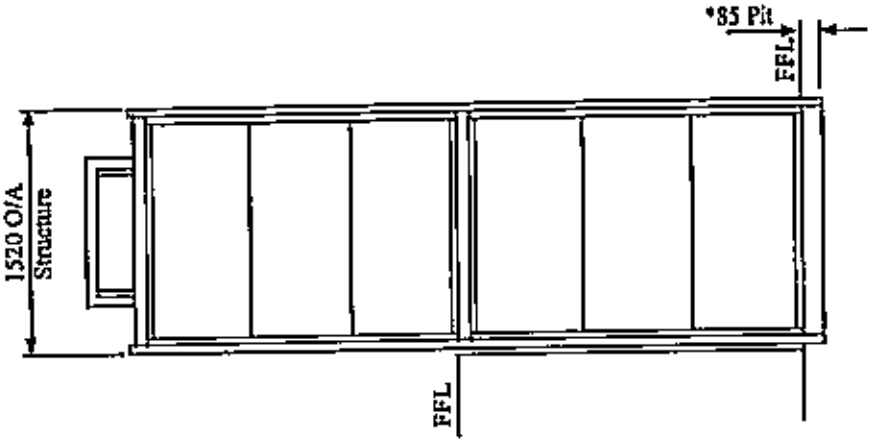

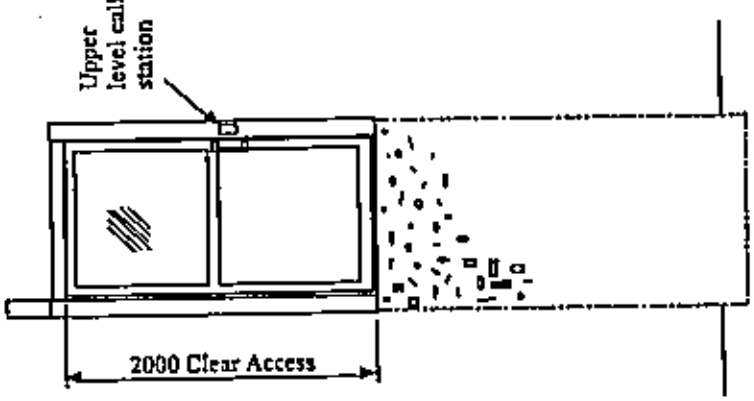

PLAN	[illegible]	[illegible]
[illegible]		
[illegible]		
[illegible]		
[illegible]		

Control Equipment
The drive unit and electrical control equipment are housed in an enclosure (600mm high by 800mm wide by 300mm deep) which should be wall mounted at a minimum height of 1200mm and can be located up to 5 metres away from the lift.

Vertical Lifting Platform Specification
Complies with BS 6440

Load:	300Kg
Drive:	Single speed electro-hydraulic
Speed:	0.1m/sec nominal
Travel:	Up to 4m maximum Note: Wall fixings required on guides side for all travel measurements.
Handing:	Optional right or left.
Site:	Internal only
Power supply:	Dedicated 240v single phase AC (13A switched fused spur)

*A pit is optional. It eliminates a ramp at the lower level.

INFORMATION SHEET
No. AVL 440
02.04.02

Data sheet

This data sheet is for guidance only and must not be used for proper working drawings. Please contact Stannah Lifts for particular details before proceeding. Owing to our policy of continual improvement we reserve the right to alter specifications and dimensions without prior notice.

For guidance only

THE STANNAH MIDILIFT PX

Wheelchair Vertical Platform 1100 x 1400
Loadings for Travel Above 2m & Upto 4m

Stannah Lifts

LOADINGS DETAIL
VERTICAL LIFT TYPE AVL ('MIDILIFT')

PLATFORM 1100mm x 1400mm
CONTRACT LOAD 300kg

NOTE:
LOADINGS GIVEN APPLY TO APPLICATIONS WITH TRAVEL ABOVE 2m & UPTO 4m

SECTIONAL PLAN ON BASE OF LIFT ENCLOSURE

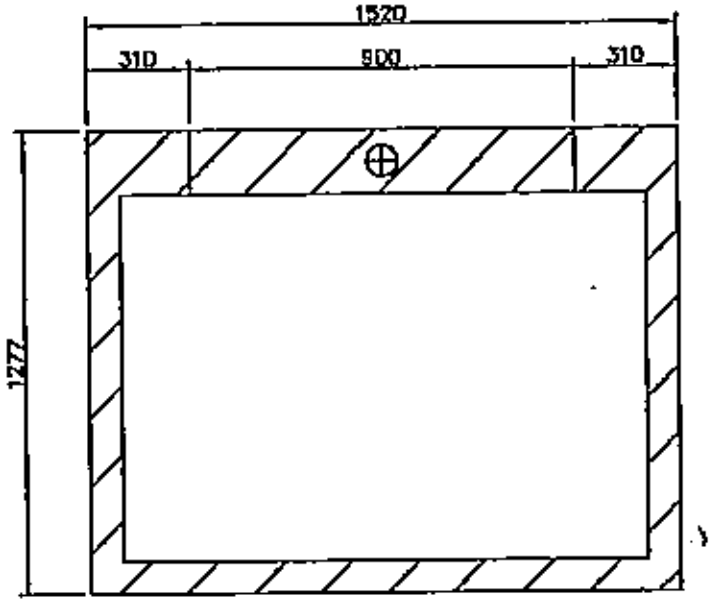

VERTICAL LOADS:
1. MASS OF ENCLOSURE = 540kg DISTRIBUTED OVER SURFACE AREA OF STRUCTURE AS HATCHED (0.343m²)
2. 1040kgf POINT (DEAD) LOAD AT ⊕ DUE TO PLATFORM OPERATION & CONTRACT LOAD.*
(BASE PLATE 900mm x 100mm x 9mm THICK.) *STATIC LOAD CALCULATED AT TWICE LIVE LOAD.

WALL FIXINGS:
2 OFF BELOW UPPER THRESHOLD – 40kgf PULL-OUT EACH. (NOTE: THESE ARE FITTED ONLY TO STEADY STRUCTURE)
1 PAIR OF GUIDE FIXINGS, 1000mm HORIZONTAL PITCH – 100kgf PULL-OUT, 750mm FROM TOP OF GUIDES (GUIDES HEIGHT DEPENDANT ON TRAVEL).

NOTE: FIXING POSITIONS FOR GUIDANCE ONLY – EXACT POSITIONS WILL BE SHOWN ON DRAWINGS, BASED ON TRAVEL & INDIVIDUAL INSTALLATION

22 OCT 2002

COPIED

INFORMATION SHEET
No. AVL 486
04.04.02

Waiver:

This data sheet is for guidance only and must not be used for proper working drawings. Please contact Stannah Lifts for particular details before proceeding. Owing to our policy of continual improvement we reserve the right to alter specifications and dimensions without prior notice.

For guidance only

MIDILIFT PX

Wheelchair
Vertical Lifting Platform

General Fixing Details

Stannah Lifts

Enclosure Size	Platform Size	Travel	Fixing Groups	Remarks
STD-1077 x 1374	1250x900	Up to 2000mm	A & D	Free Standing
STD-1077 x 1374	1250x900	Over 2000mm	(*B or C) & D	
LARGE-1277 x 1524	1400x1524	Up to 2000mm	A, D & C	
LARGE-1277 x 1524	1400x1100	Over 2000mm	C & D	

Notes:
Fixing descriptions
A = Fixing method required for enclosures with travel under 2000mm (through car and adjacent entry only).
*B = Fixing method shall only be applicable if no suitable load bearing wall or structure is available.
C = Fixings shall be required as standard on all large platform applications where available.
D = This fixing is available and is applied to all enclosures.

OCT 2002

INFORMATION SHEET AVL-489
02.04.02

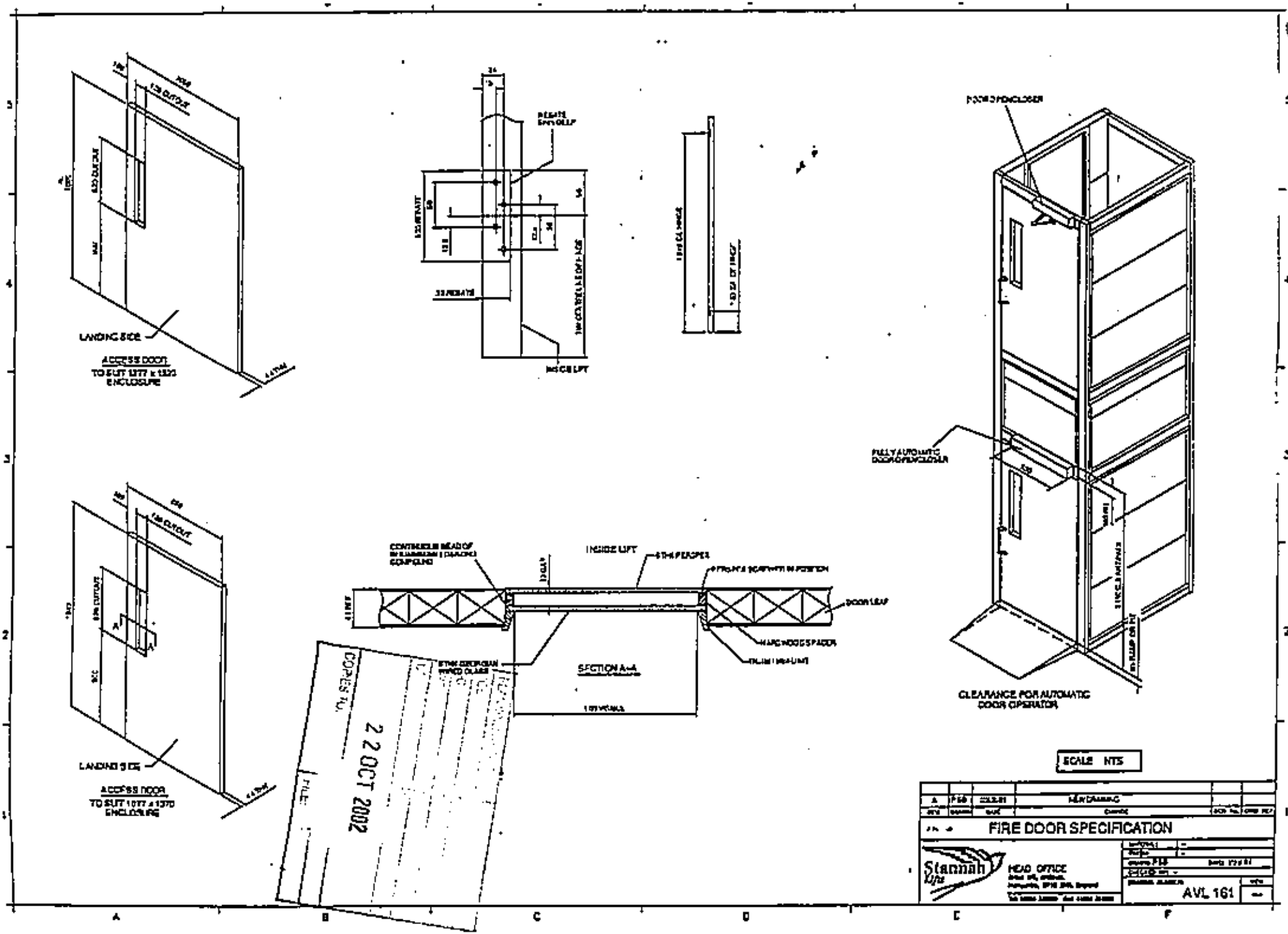
LANDING SIDE
ACCESS DOOR
TO SUIT 1377 x 1320
ENCLOSURE
INSIDE LIFT
DOOR OPENCLOSER
FULLY AUTOMATIC
DOOR OPENCLOSER
CLEARANCE FOR AUTOMATIC
DOOR OPERATOR
INSIDE LIFT
DOOR LEAF
SECTION A-A
LANDING SIDE
ACCESS DOOR
TO SUIT 1377 x 1370
ENCLOSURE
SCALE NTS
FIRE DOOR SPECIFICATION
Stannah Lifts
HEAD OFFICE
AVL 161
COPIES TO
22 OCT 2002
FILE

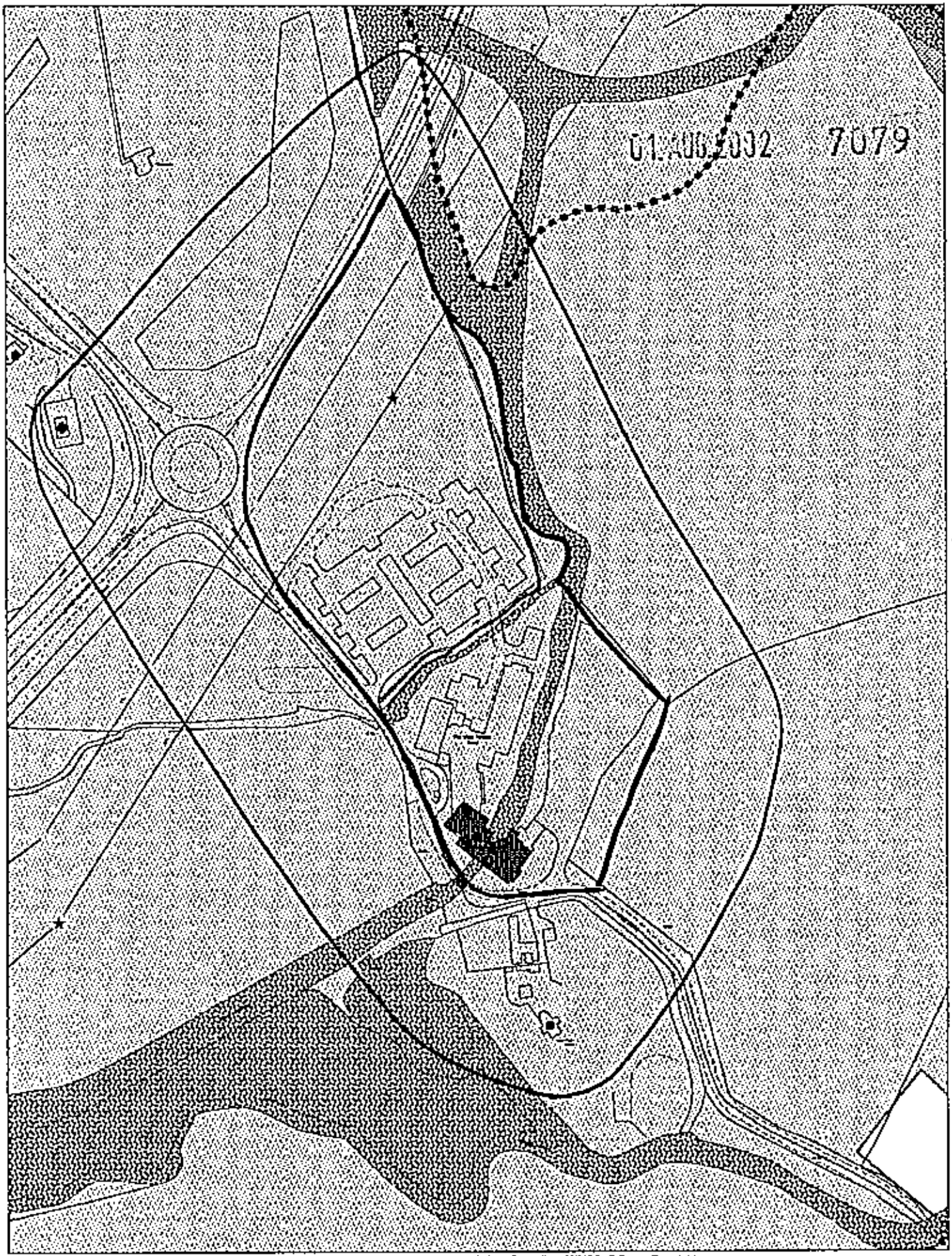

This map is based upon Ordnance Survey material with the permission of Ordnance Survey on behalf of the Controller of HMSO. © Crown Copyright.
Unauthorised reproduction infringes Crown Copyright and may lead to prosecution or civil proceedings.Wokingham District Council Licence LA086134

Development Control Section, Environmental Services, Wokingham District Council.
16 July 2002
Scale: 1 : 2500

NOTES

1. Refer to drawing 201033/03 for notes.

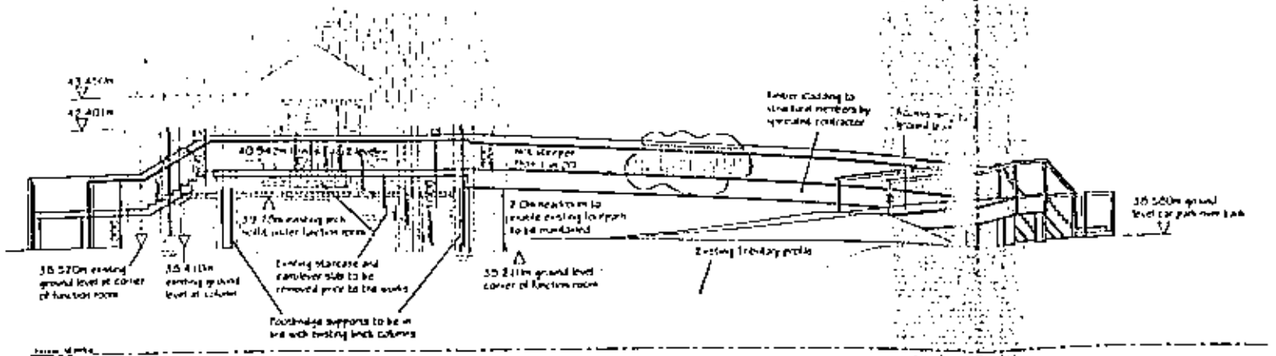

Elevation of Main Span and Emergency Exit

Scale 1:100

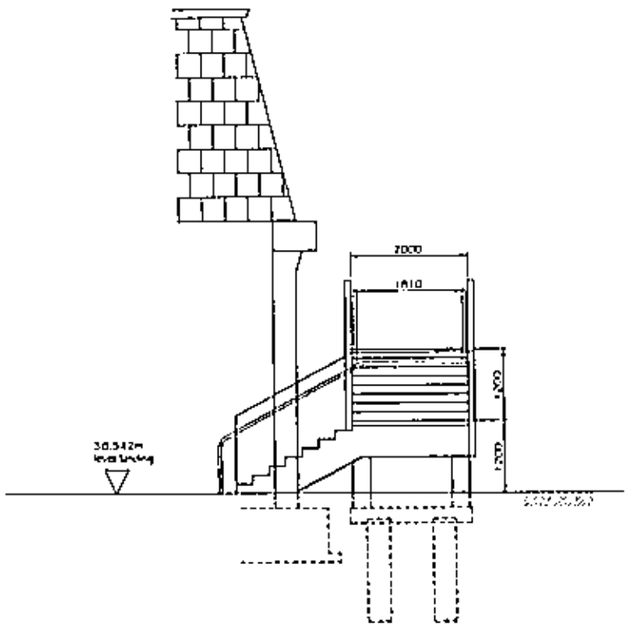

Elevation of Steps near Hotel Entrance

Scale 1:50

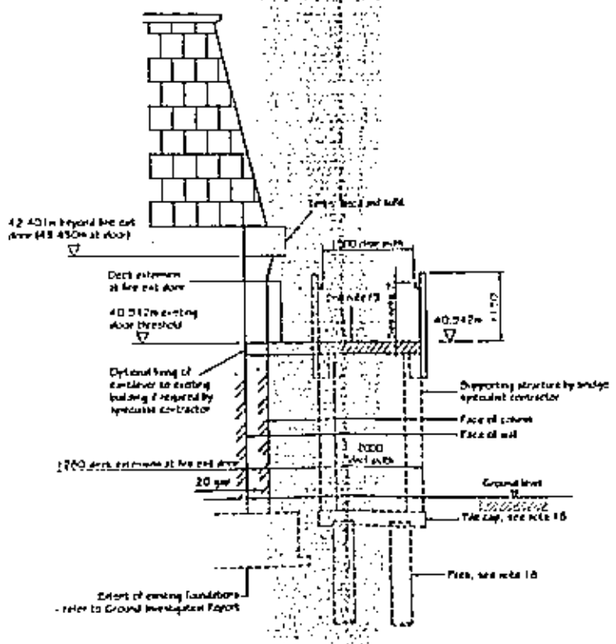

Indicative Cross Section A-A at Fire Exit Door

Scale 1:50

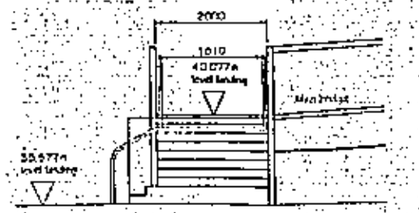

Elevation of steps on River Bank

Scale 1:50

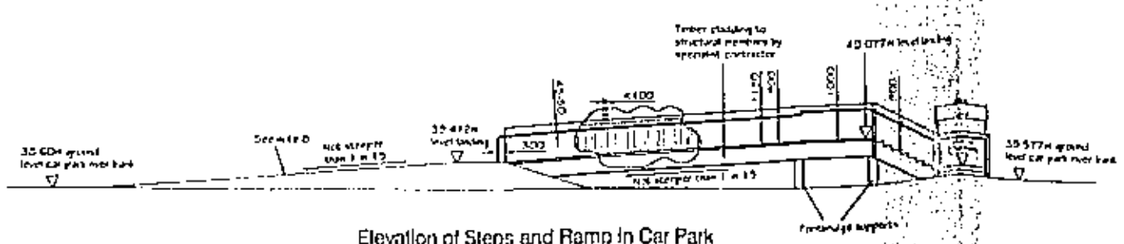

Elevation of Steps and Ramp in Car Park

Scale 1:100

P1	Initial	TU		
Rev	Description	Dr	Ch	Date

Client: Queens Moat Houses

Project: Queens Moat House - Reading
Proposed Footbridge and Flood Mitigation Measures

Title: Indicative Details of Footbridge
Plan 2

Hannah Reed
Unit 1 Broad House, Fulbourn, Cambridge, CB21 5HS
Tel: 01223 881 888 Fax: 01223 881 889

Issued Size	A1
Drawn	TU
Checked	JFX
Approved	
Scale	Refer to drawing
Drawing Number	201033/04
Rev	P1

© The drawing is the copyright of Hannah Reed & Associates Limited and shall not be reproduced without permission.

Door 'C'

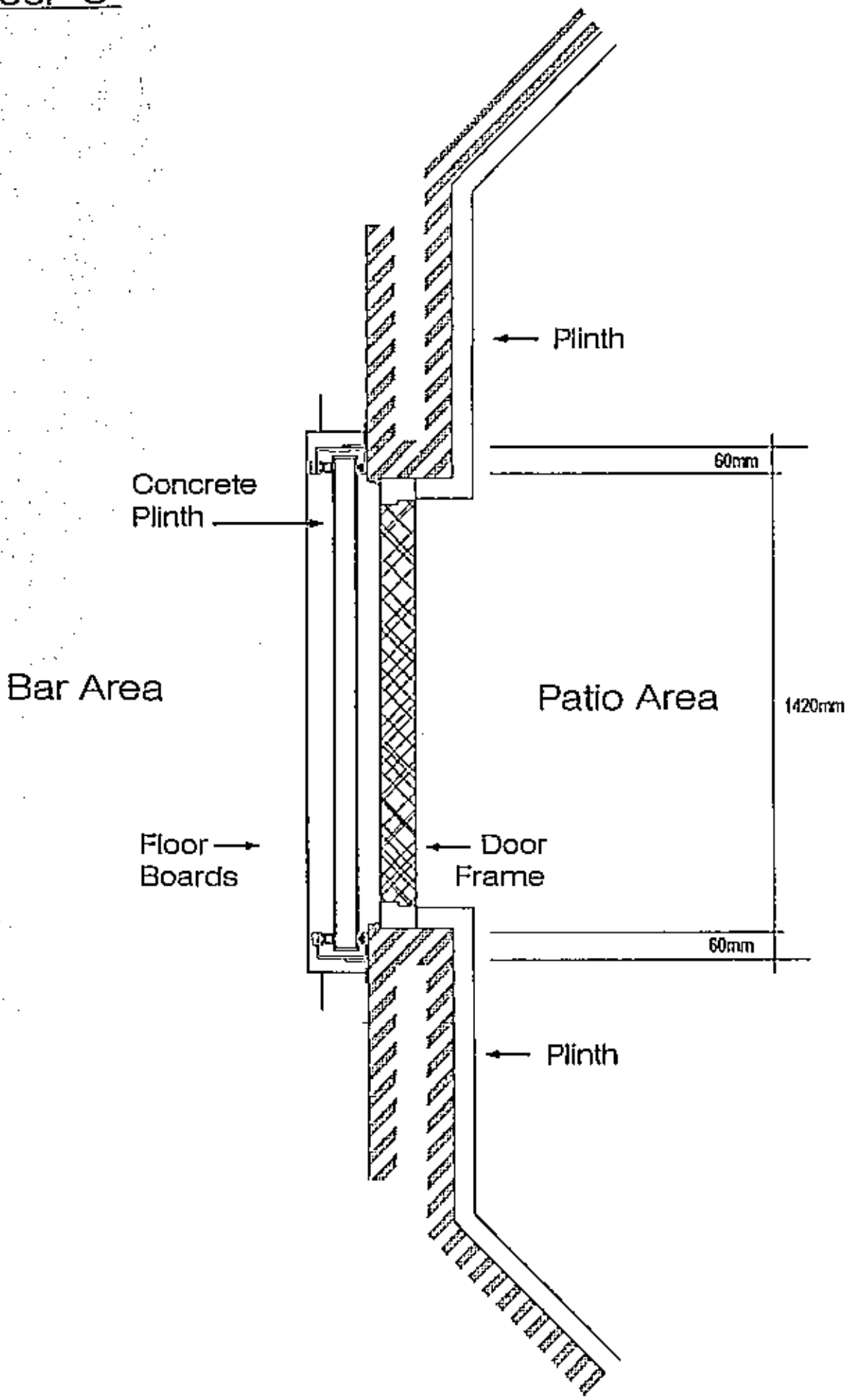

6000-1191/3

NOTES

1. DO NOT SCALE - Use figured dimensions only.
2. All dimensions are in millimetres unless otherwise stated.
3. The Contractor is to verify all dimensions on site before commencing work or preparing shop drawings.
4. This drawing is to be read in conjunction with all Engineers and Architects drawings and specification.
5. Steel to receive factory paint system applied in accordance with the manufacturer's instructions. Colour to be agreed.
6. All steps to have contrasting colour nosings. Colour and product to be approved by Town Centre Manager.
7. Handrail/rail is accessible to the Building Regulations Document M, Diagram 5. Diameter is to be 50-60mm diameter with a 75mm clear zone between handrail and wall. Handrail to be positioned 900mm above the pitch line of a flight of steps, and 1000mm above the surface of a landing.
8. Footpath construction: 150mm depth of Sentinel type 1 material between reinforced concrete edging boards. Edging boards to be 50mm wide x 200mm high, dressed to a smooth finish. Boards to be fixed with 50mm x 50mm timber pegs at 1.0m centres. Pegs to be driven to a depth of 150mm below the top of the boards. Boards to be set to a gradient of 1:20 to allow surface water to run off. Boards to be left in place after completion of the footpath. Footpath to be laid to a gradient of 1:20 to allow surface water to run off. Footpath to be laid to a gradient of 1:20 to allow surface water to run off. Footpath to be laid to a gradient of 1:20 to allow surface water to run off.
9. Footpath to be laid to a gradient of 1:20 to allow surface water to run off. Footpath to be laid to a gradient of 1:20 to allow surface water to run off. Footpath to be laid to a gradient of 1:20 to allow surface water to run off.
10. Max. step rise/height = 150mm
11. Min. step going/depth = 250mm
12. Handrail to extend 300mm beyond top and bottom end of steps or ramp in accordance with Building Regulations Document M, Diagram 4.
13. Parapet/balustrade 100mm sphere must be unable to pass through any openings in railings.
14. Parapet/balustrade railing must be suitable to climb (panels (i.e. no central horizontal members etc.)
15. Provision to be made for footbridge lighting - details to be confirmed.
16. All footbridge elements, including supporting members to be Class hardwood or timber clad galvanised steel.
17. Footpath to be constructed in C25 air entrained concrete in 70mm deep pale grey GRC cement. Path to be 100mm thick reinforced over 100mm thick compacted granular type 1 material. The surface shall be stamped finish with 100mm wide grooves finish along the edges and joints.
18. Kerbs and pits are to be designed, located and detailed by piling specialist contractor in accordance with section 03S of specification and the Ground Investigation Report.
19. Deck surface to have a non-slip textured finish without any applied finishes.

Key

40.000 — Denotes finished level to bridge, ramp or stairs

Rev	Description	By	Chk	Date
P5	Path from steps to car park on river bank removed	TU	RCB	29.07.02
P4	Steps re-moved to dwg 201033/0004. Steps on river bank removed	TU	JFK	26.07.02
P3	Concrete footpath added, Note added to drawing. Dimensions added to cross section, Note 8 and 19 amended. Note 16, 18 & 19 added. Foundation details added to [illegible]	RJ	JFK	02.07.02
P2	Major Alterations and Additions	TU	JFK	20.06.02
P1	Initial Issue	TU	JFK	14.06.02

Client: Queens Moat Houses

Project: Queens Moat House - Reading
Proposed Footbridge and Flood Mitigation Measures

Title: Indicative Details of Footbridge
Plan 1

Hannah Reed

Sheet Size	A1
Scale	1:100 and 1:50
Drawn	TU
Checked	JFK
Approved	
Drawing Number	201033/03
Rev	P5

© The drawing and the copyright of Hannah Reed & Associates Limited and may not be reproduced or used except as permitted by

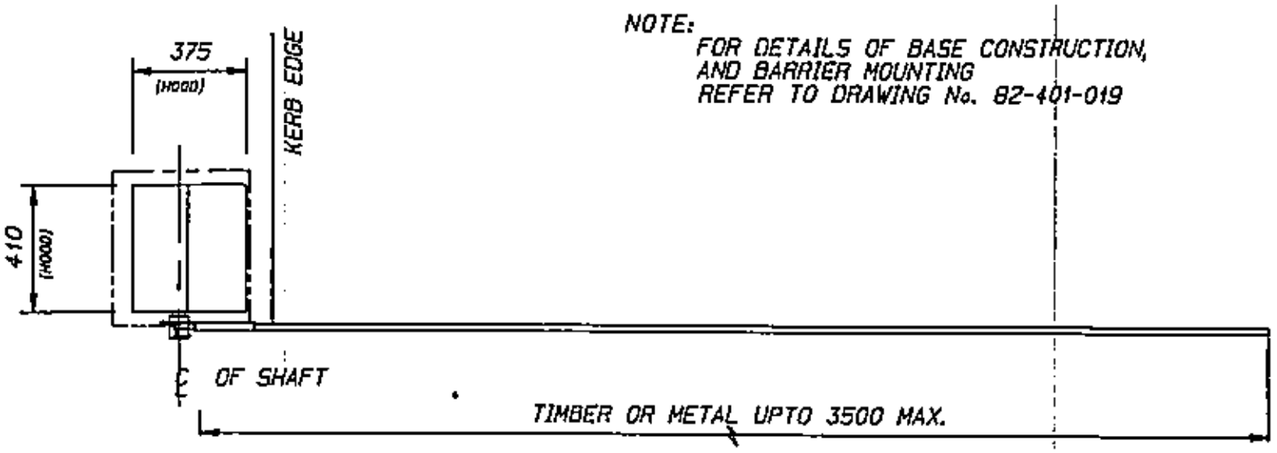

NOTE:
FOR DETAILS OF BASE CONSTRUCTION, AND BARRIER MOUNTING REFER TO DRAWING No. 82-401-019

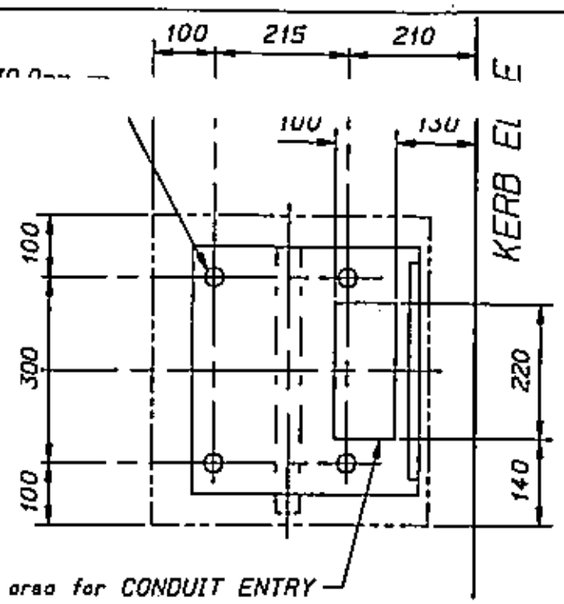

SECTION 'A'-'A'

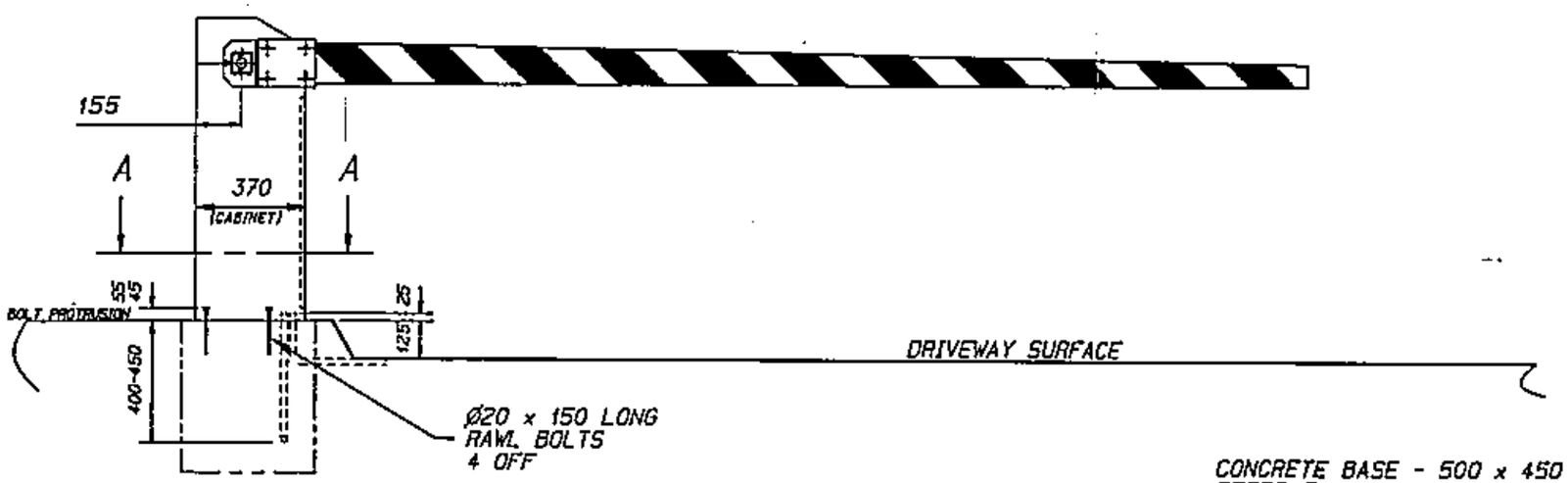

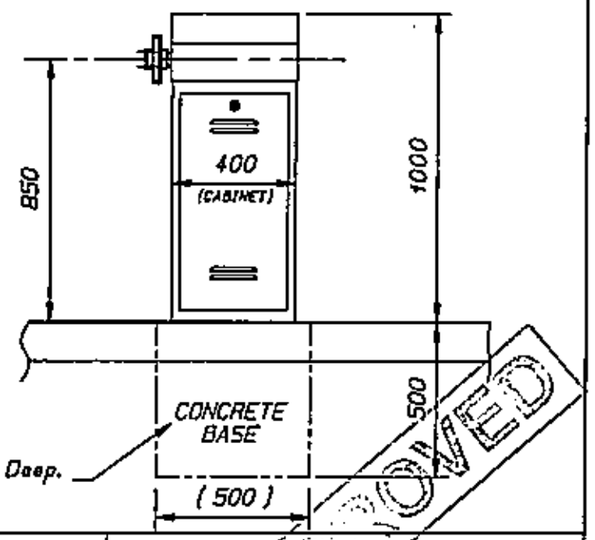

CONCRETE BASE - 500 x 450 x 500 Deep.
REFER TO DRAWING No. 82-401-19

THIRD ANGLE PROJECTION

APPROVED

SCALE: 1:10 & 1:20	DIMS. IN: mm.	ISS	ECR No	DATE	BY	REVISIONS	MATERIAL:
DO NOT SCALE DRAWING	COPYRIGHT OF THIS DRAWING IS OWNED BY APT CONTROLS LTD., AND MAY NOT BE COPIED IN WHOLE OR IN PART OR USED IN ANY MANNER WHATSOEVER WITHOUT PRIOR WRITTEN APPROVAL.	1		24.10.94	DM.	INITIAL ISSUE.	
DRAWN BY: D.MISTRY.		2	0408	13.01.95	DM.	CABINET & CONDUIT ENTRY HOLE INCREASED BY 20mm.	FINISH:
APPROVED BY: BKBELLS.		3	0465	23/10/96	JG.	REF. TO DRAWING No. 82-401-019 ADDED.	
		4	0475	04/04/97	DM.	METAL POLE LENGTH WAS 3000 MAXIMUM.	TOLERANCES:
		5	0516	27.02.97	DM.	BASE FRONT MTNG. HOLES MOVED; CONDUIT ENTRY AREA ENLARGED.	UNLESS OTHERWISE STATED

JOB TITLE: MC - REVENUE BARRIER

DRAWING TITLE: INSTALLATION DETAILS [LEFT HAND]

APT CONTROLS LTD.

DRAWING No. 82-301-077

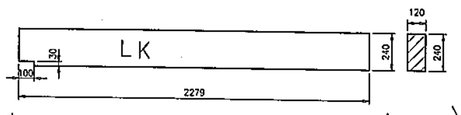

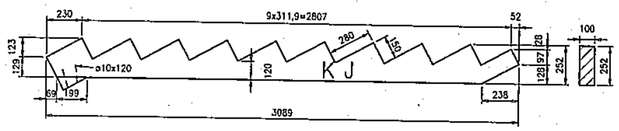

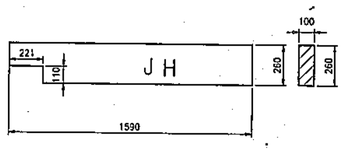

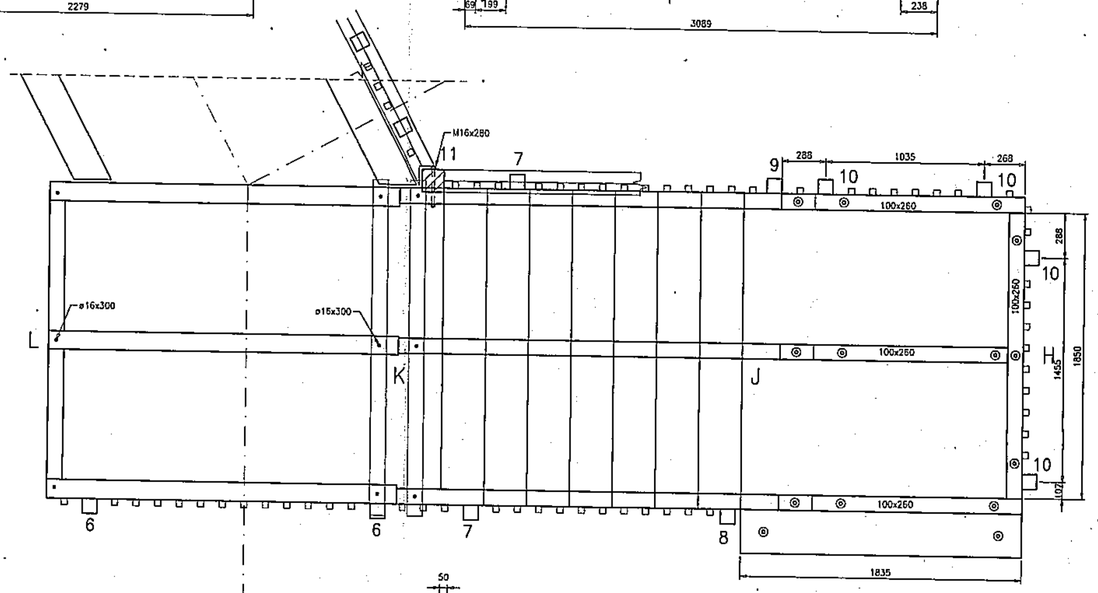

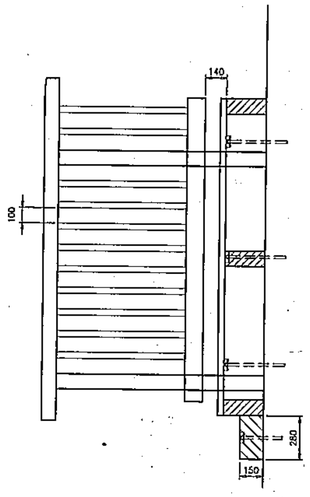

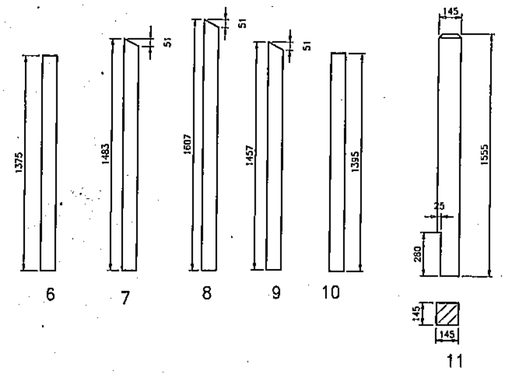

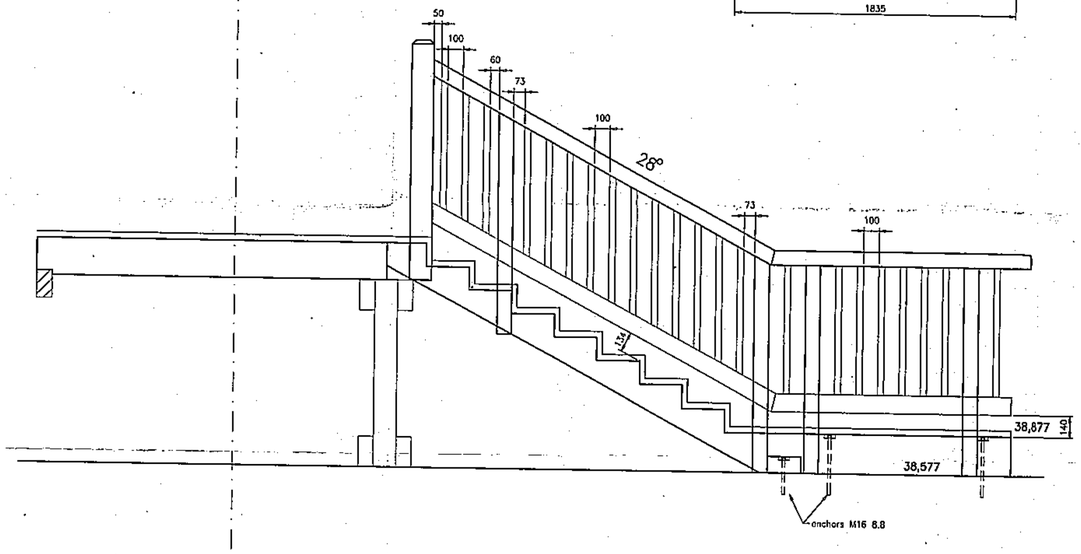

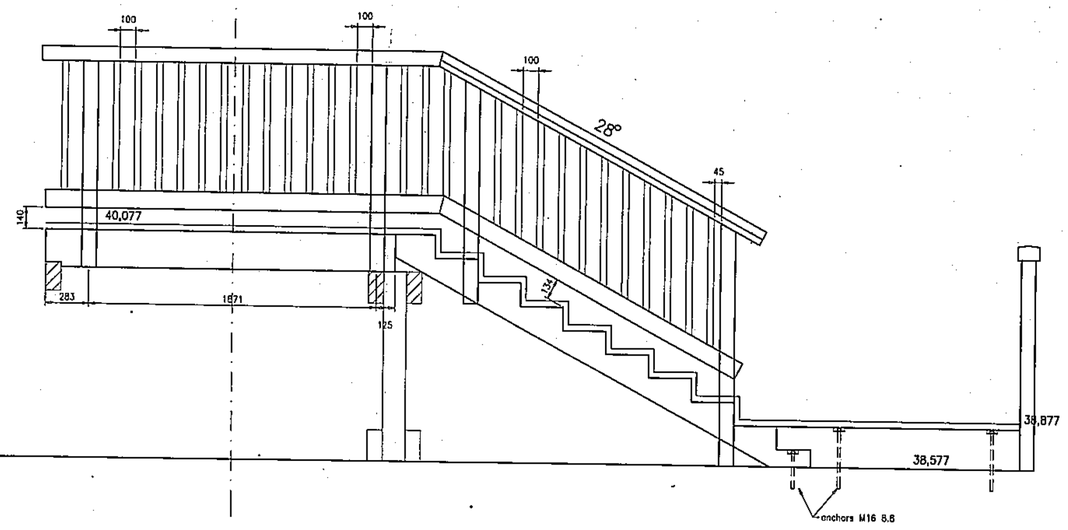

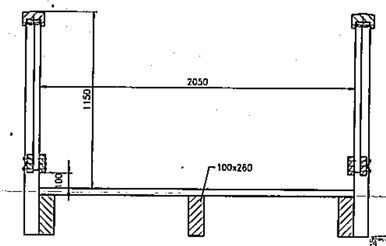

Cross–section JK 1:20

OCT 2002
14 OCT 2002
RECEIVED

Nr.	Date issue	Design	Drawn	Checked	Description revision/addition

Principal: Queens Moat Houses

Date approval:

Date issue: 10–10–2002

Name structure: Moat House Hotel footbridge

Design: BE

Drawn: BE

Part structure: Part H–J–K–L

Checked:

Scale: 1:20

Drawingnr. – part: E2940/7

Sarum Hardwood Structures Limited
124/126 Stockbridge Road
Winchester, Hampshire, SO22 6RN
Tel.: 01962 863677
Fax: 01962 842292

Sheet: Tek7

PREFAZO® Type 1

22 OCT 2002
COPIES TO:
FILE:

"This document contains information proprietary to GROOT CONSULTANTS B.V. Any disclosure or use of the proprietary information or reproduction of this document is expressly prohibited except as GROOT CONSULTANTS B.V. may otherwise agree in writing"

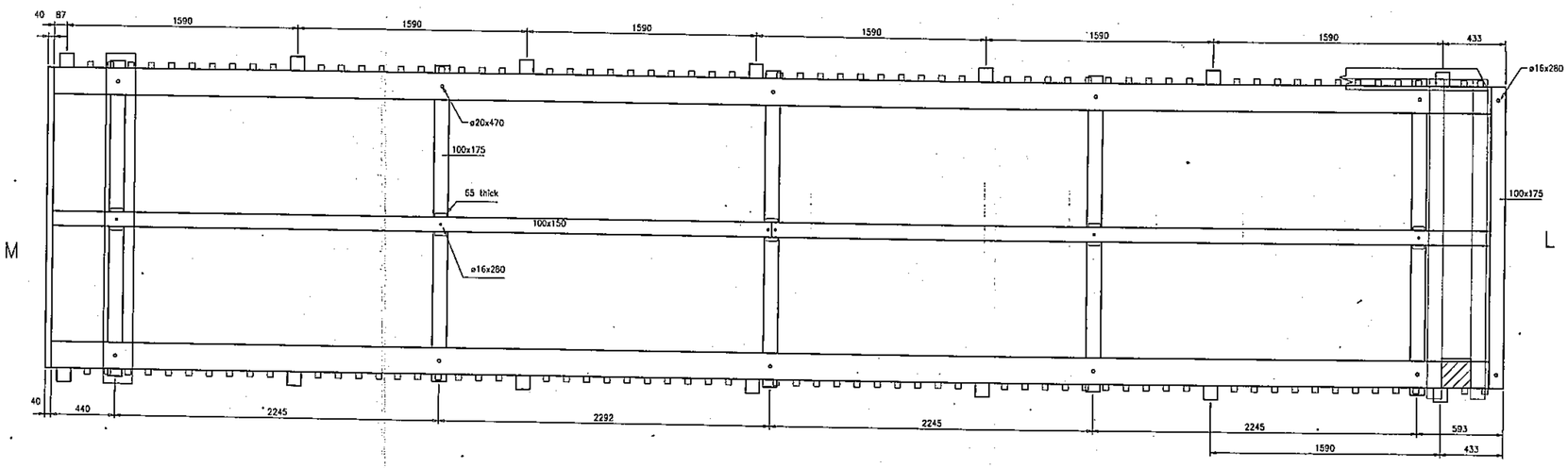

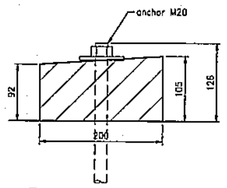

Bearer in M 1:5

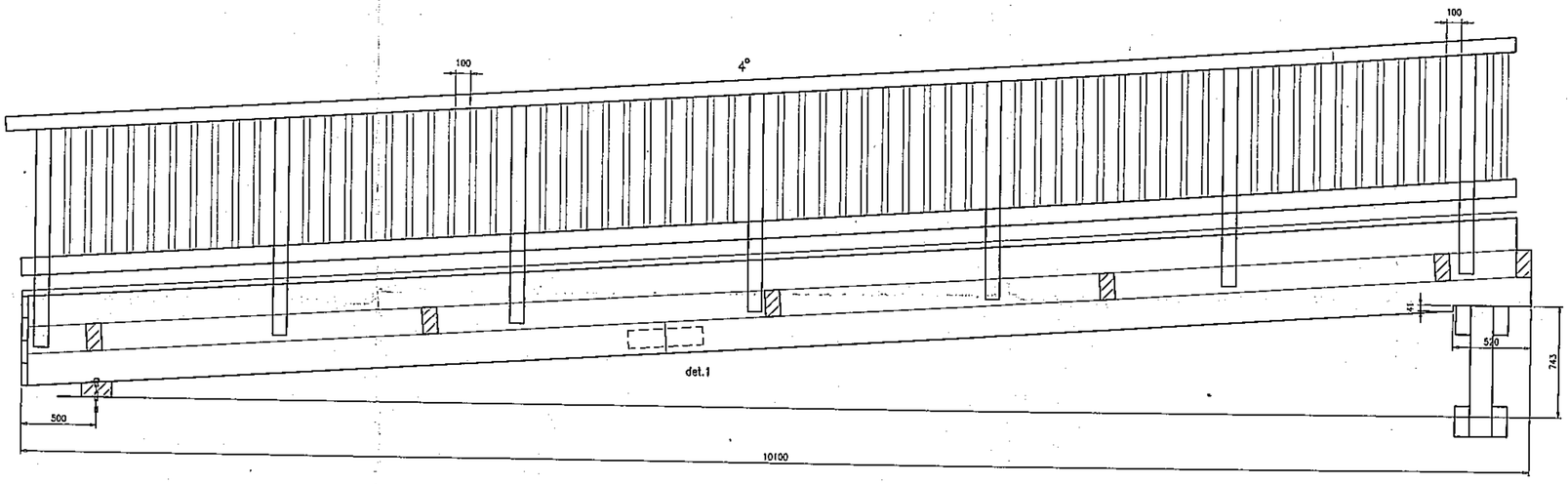

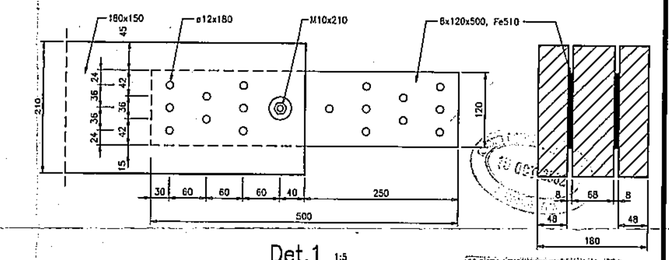

Det.1 1:5

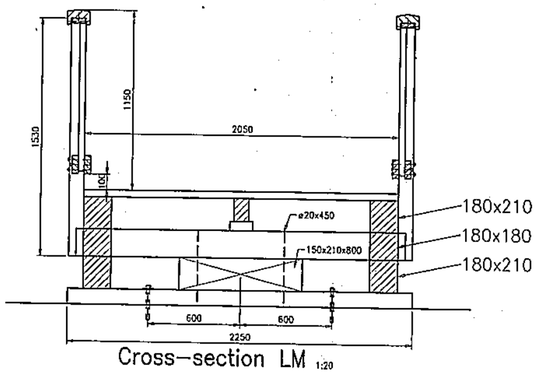

Cross-section LM 1:20

RECEIVED
14 OCT 2002

Nr.	Date issue	Design	Drawn	Checked	Description revision/addition

Principal: Queens Moat Houses	Date approval: , Date issue: 10-10-2002
Name structure: Moat House Hotel footbridge	Design: BE, Drawn: BE
Part structure: Part L–M	Checked: , Scale: 1:20
SHS Sarum Hardwood Structures Limited	Drawingnr. – part: E2940/6
124/126 Stockbridge Road, Winchester, Hampshire, SO22 6RN — Tel.: 01962 863677, Fax: 01962 842282	Sheet: Tek5, PREFAZO® Type 2

ENGINEERING	DPT.
RVL	
CG	
JPP	
GS	

22 OCT 2002

COPIES TO

"This document contains information proprietary to GROOT CONSULTANTS B.V. Any disclosure or use of the proprietary information or reproduction of this document is expressly prohibited except as GROOT CONSULTANTS B.V. may otherwise agree in writing"

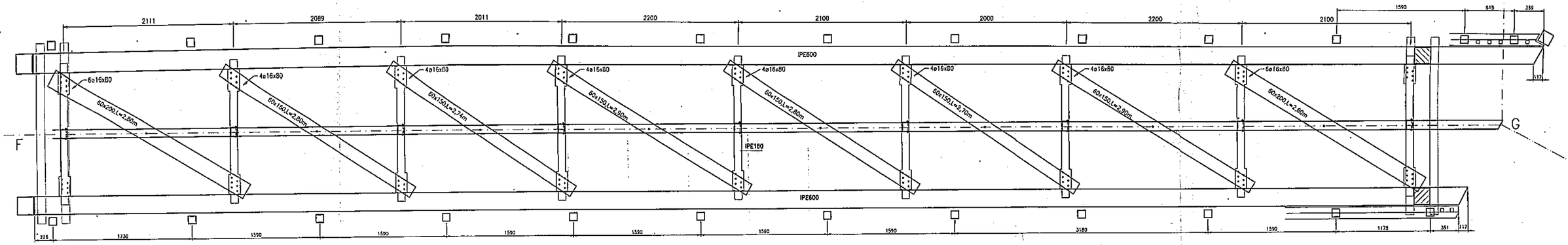

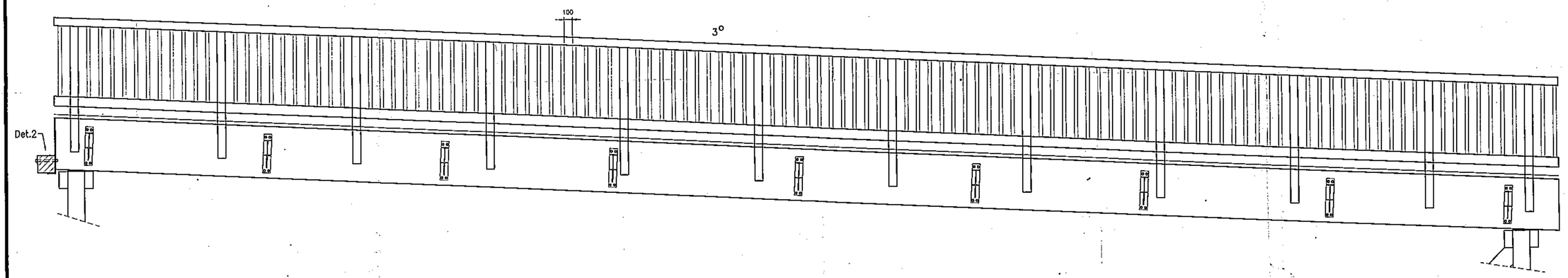

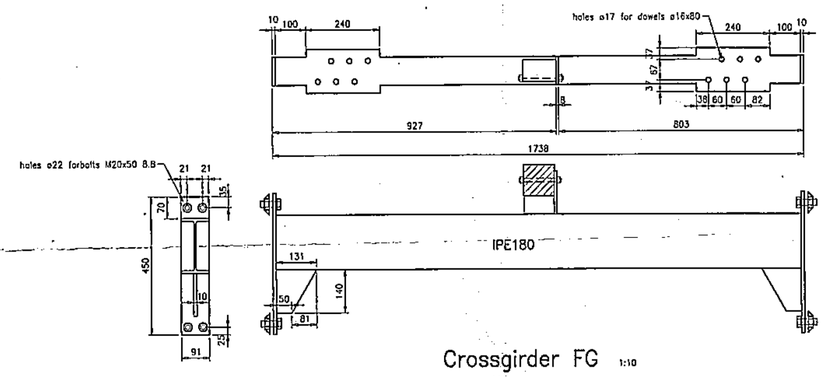

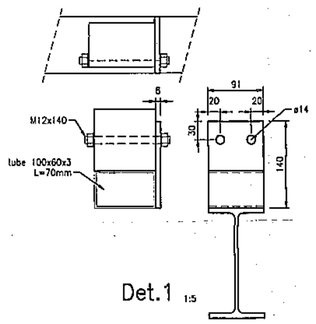

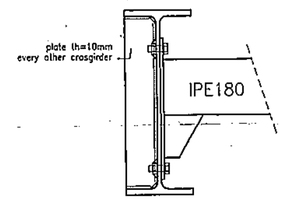

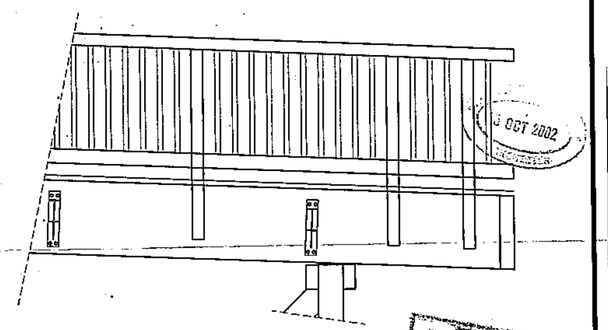

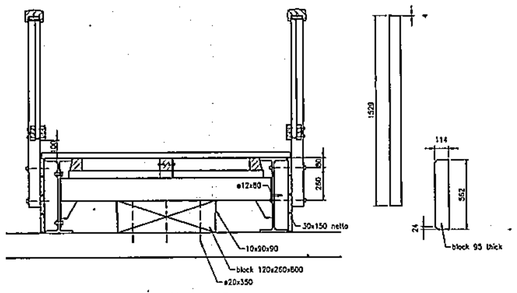

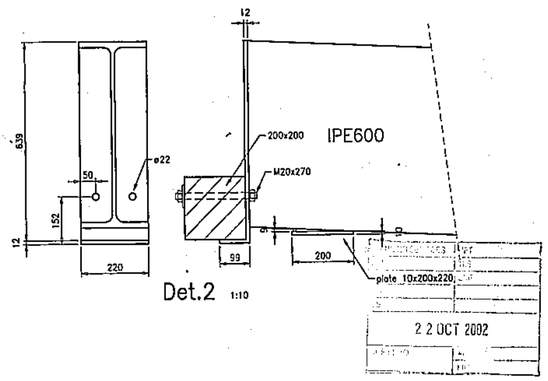

RECEIVED
22 OCT 2002

Nr.	Date issue	Design	Drawn	Checked	Description revision/addition

Principal: Queens Moat Houses

Date approval:

Date issue: 10-10-2002

Name structure: Moat House Hotel footbridge

Design: BE

Drawn: BE

Part structure: part F-G

Checked:

Scale: 1:25

Drawingnr. - part: E2940/5

Sheet: Tek5

PREFAZO® Type 1

Sarum Hardwood Structures Limited
124/126 Stockbridge Road
Winchester, Hampshire, SO22 6RN
Tel.: 01962 863677
Fax: 01962 842292

"This document contains information proprietary to GROOT CONSULTANTS B.V. Any disclosure or use of the proprietary information or reproduction of this document is expressly prohibited except as GROOT CONSULTANTS B.V. may otherwise agree in writing"

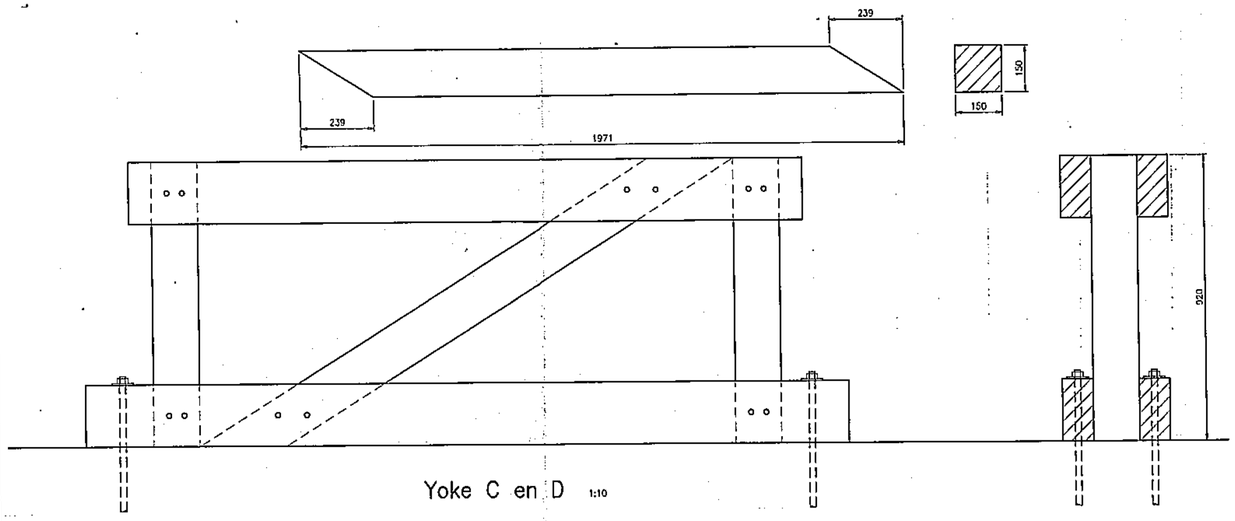

Yoke C en D 1:10

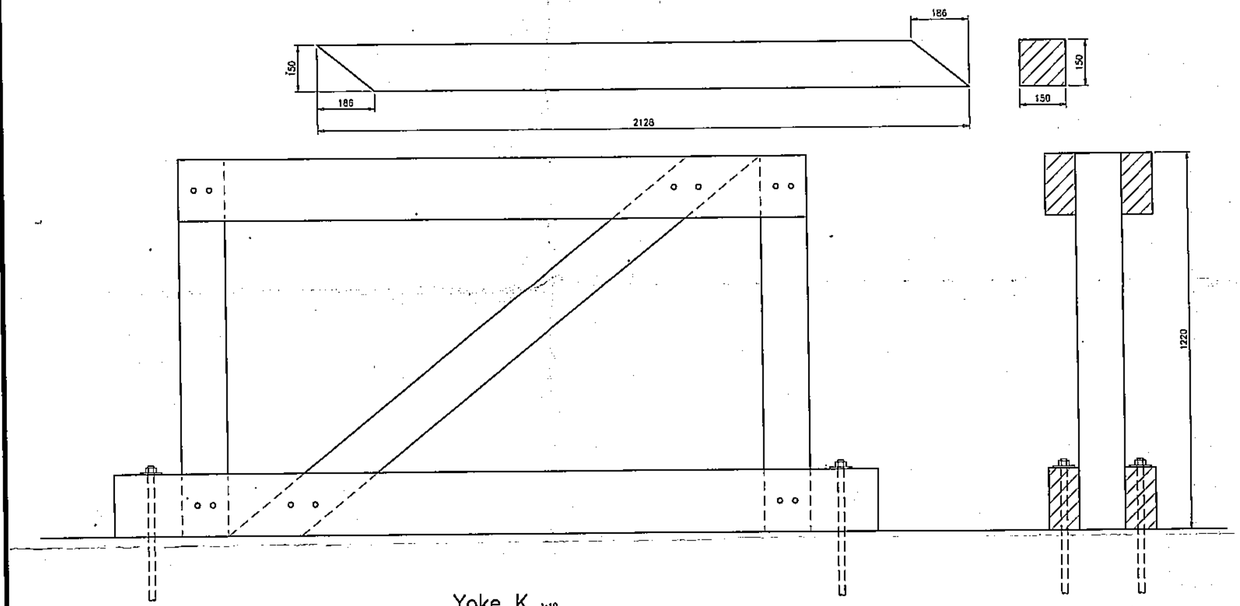

Yoke K 1:10

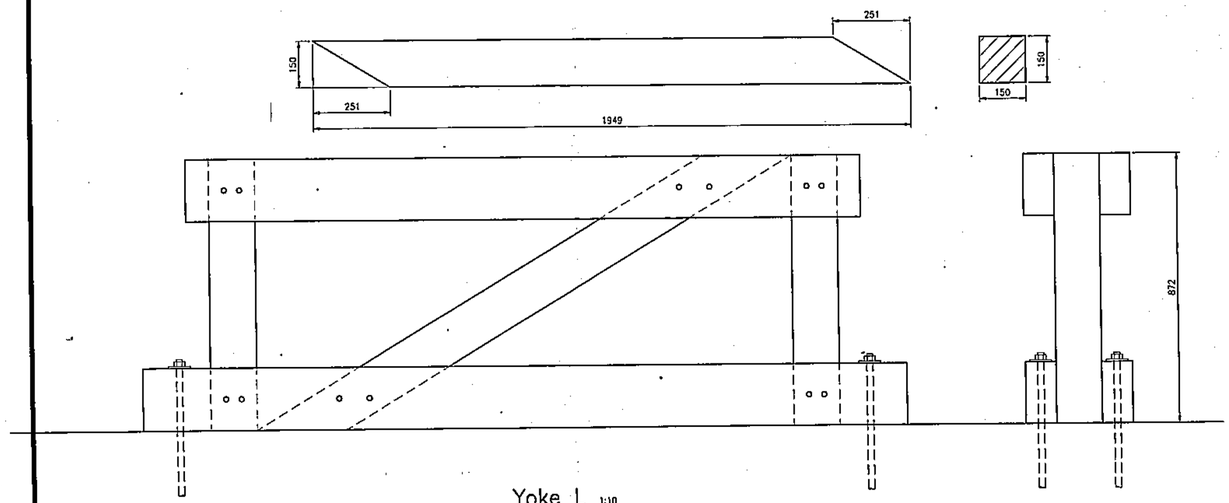

Yoke L 1:10

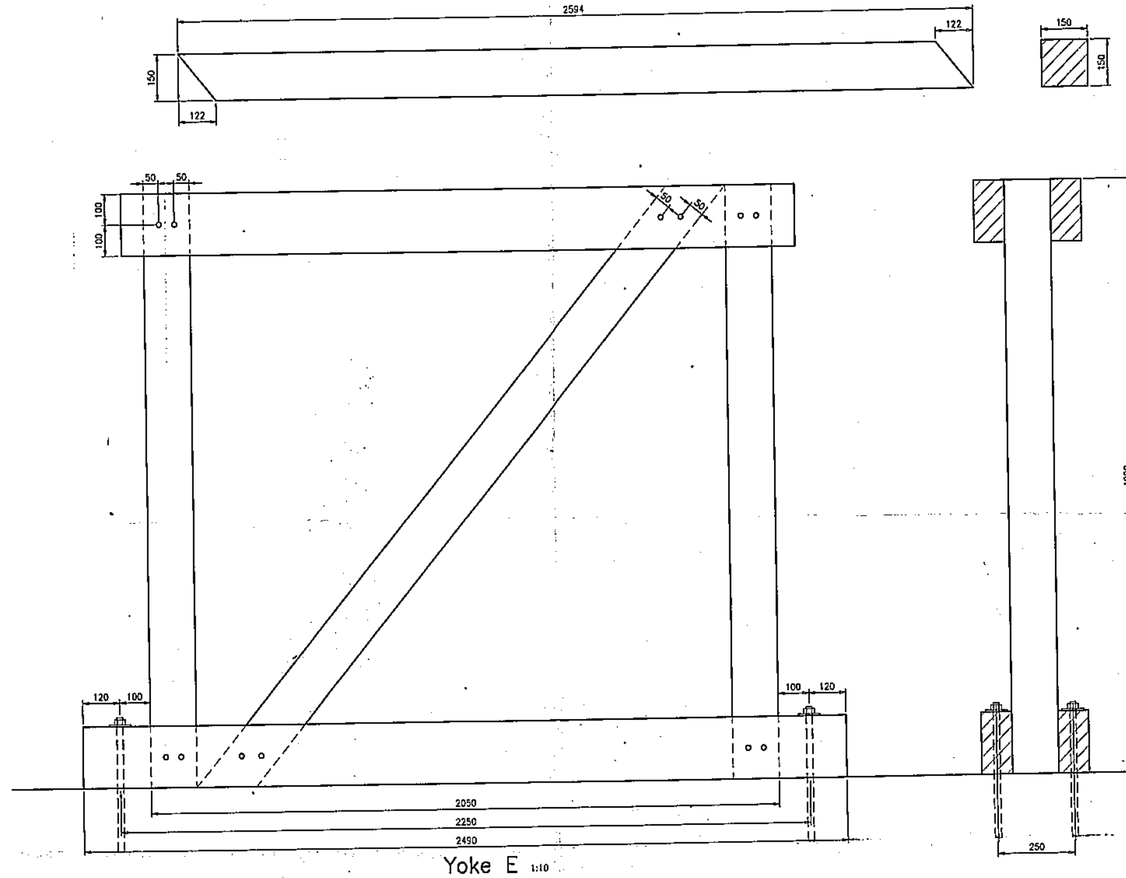

Yoke E 1:10

dowels ø16x350
anchorbolts M20 8.8
piles 150x150
ties 100x200
dimensions see yoke E

Nr.	Date issue	Design	Drawn	Checked	Description revision/addition

Principal: Queens Moat Houses

Date approval:

Date issue: 10-10-2002

Name structure: Moat House Hotel footbridge

Design: BE

Drawn: BE

Part structure: Yokes

Checked:

Scale: 1:20

Drawingnr. – part: E2940/1

Sheet: Tek1

PREFAZO® Type

SHS Sarum Hardwood Structures Limited
124/128 Stockbridge Road
Winchester, Hampshire, SO22 6RN
Tel.: 01962 863577
Fax: 01962 842292

This document contains information proprietary to GROOT CONSULTANTS B.V. Any disclosure or use of the proprietary information or reproduction of this document is expressly prohibited except as GROOT CONSULTANTS B.V. may otherwise agree in writing

15 OCT 2002
14 OCT 2002
RECEIVED
22 OCT 2002

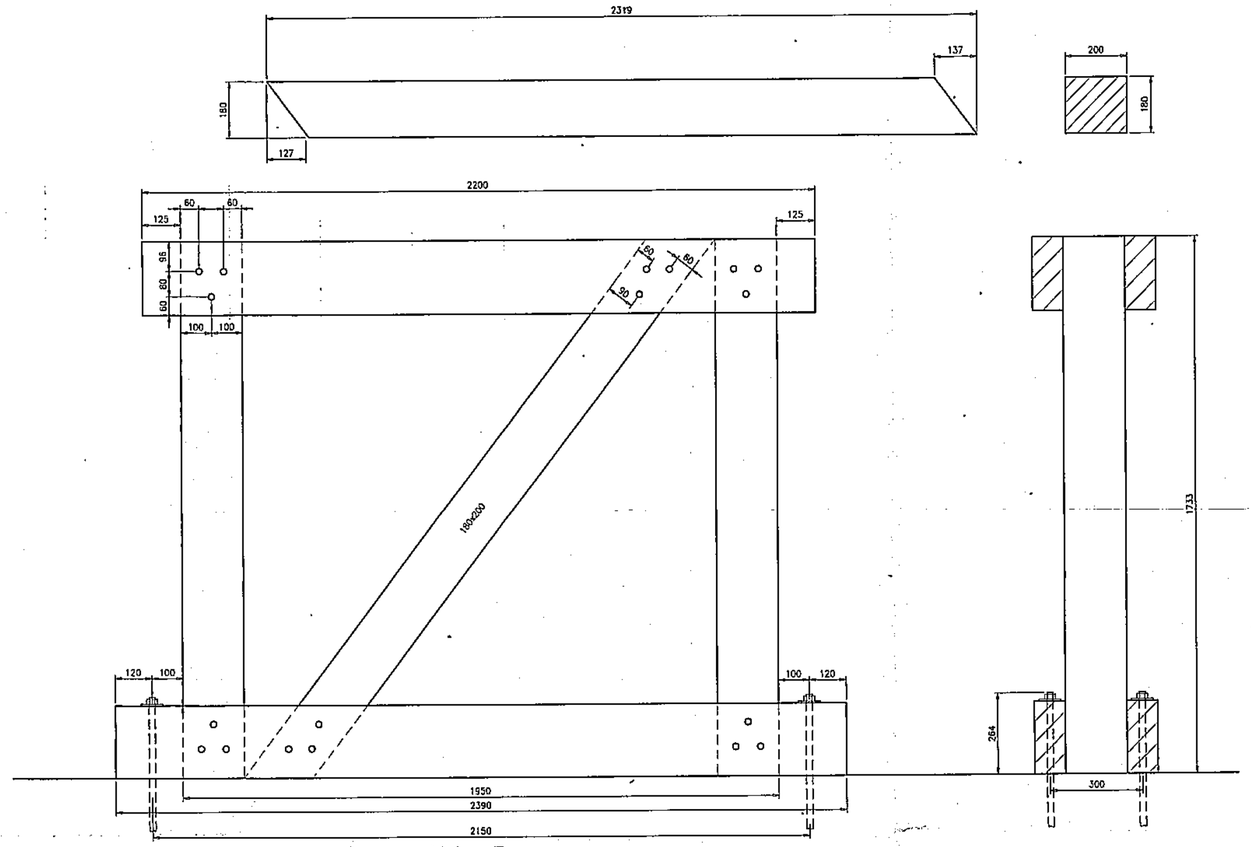

Yoke F 1:10

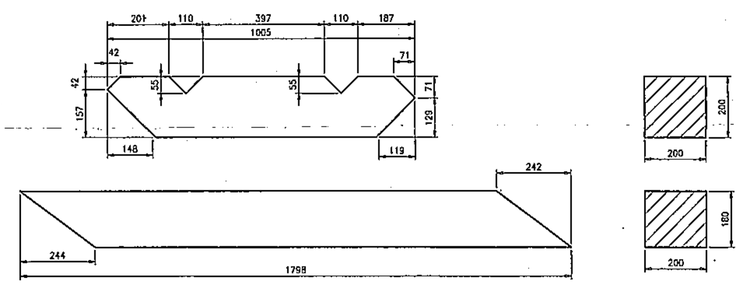

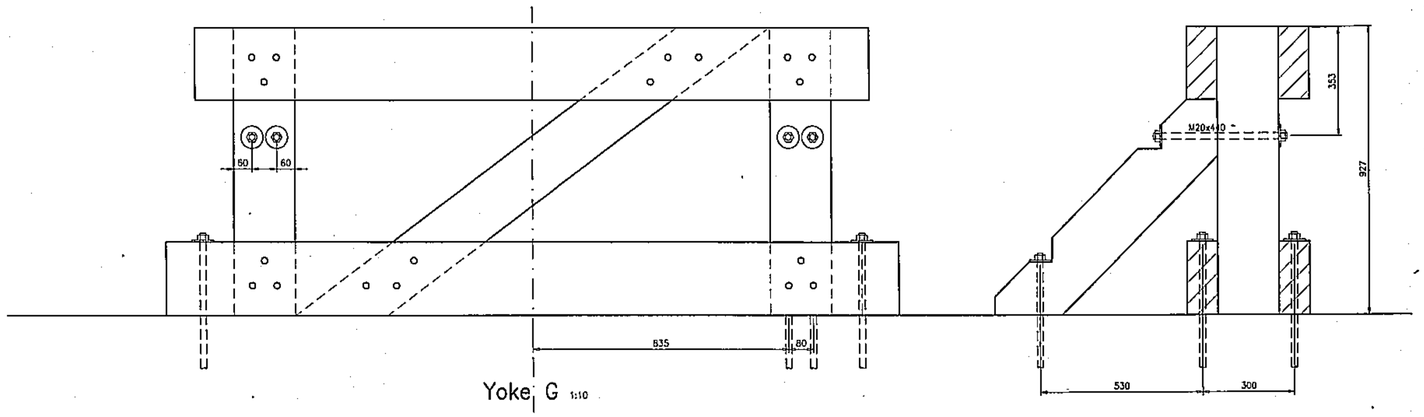

Yoke G 1:10

dowels ø20x400
anchorbolts M20 8.8
piles 200x200
ties 100x236
dimensions see yoke F

14 OCT 2002
RECEIVED
12 OCT 2002

Nr.	Date issue	Design	Drawn	Checked	Description revision/addition

Principal:
Queens Moat Houses

Date approval:

Date issue:
10-10-2002

Name structure:
Moat House Hotel footbridge

Design:
BE

Drawn:
BE

Part structure:
Yokes

Checked:

Scale:
1:20

Drawingnr. - part:
E2940/2

Sheet:
Tek2

PREFAZ0[9] Type

Sarum Hardwood Structures Limited
124/126 Stockbridge Road
Winchester, Hampshire, SO22 6RN
Tel.: 01962 863677
Fax: 01962 842292

"This document contains information proprietary to GROOT CONSULTANTS B.V. Any disclosure or use of the proprietary information or reproduction of this document is expressly prohibited except as GROOT CONSULTANTS B.V. may otherwise agree in writing"

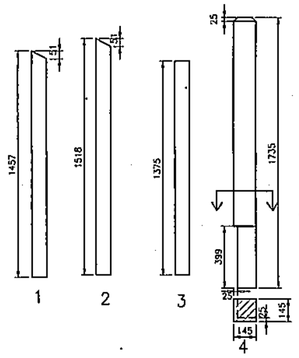

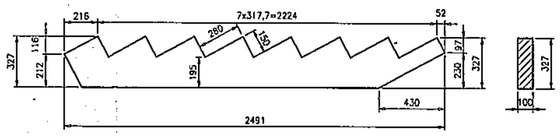

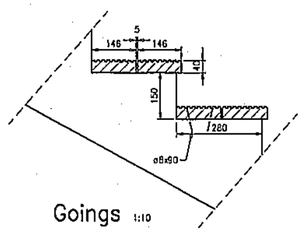

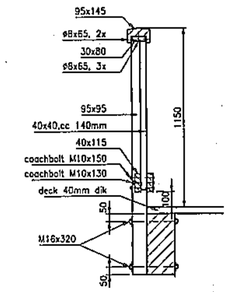

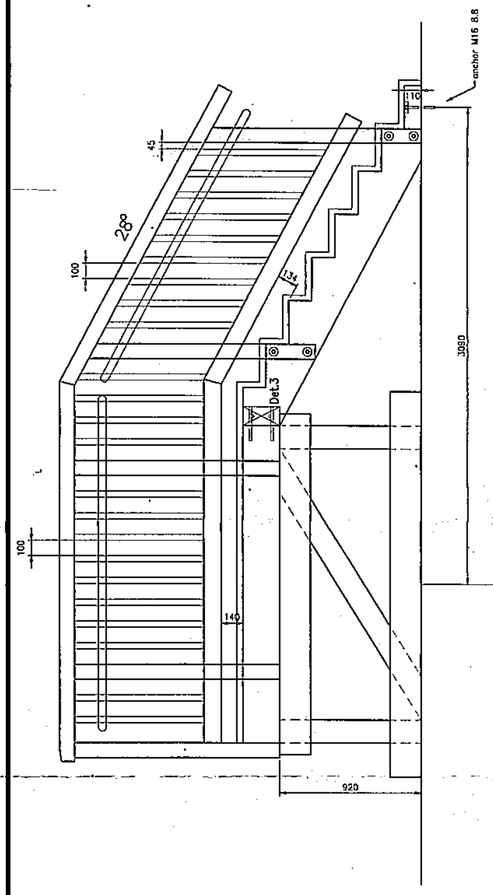

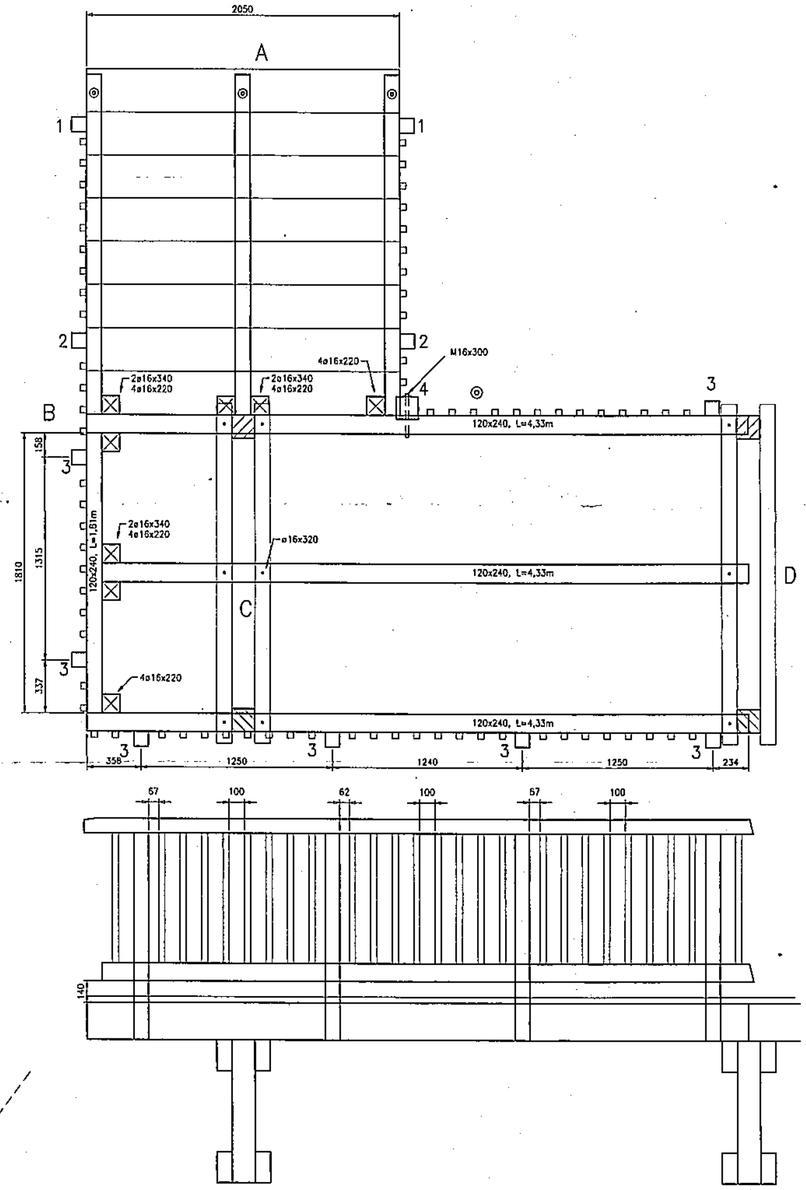

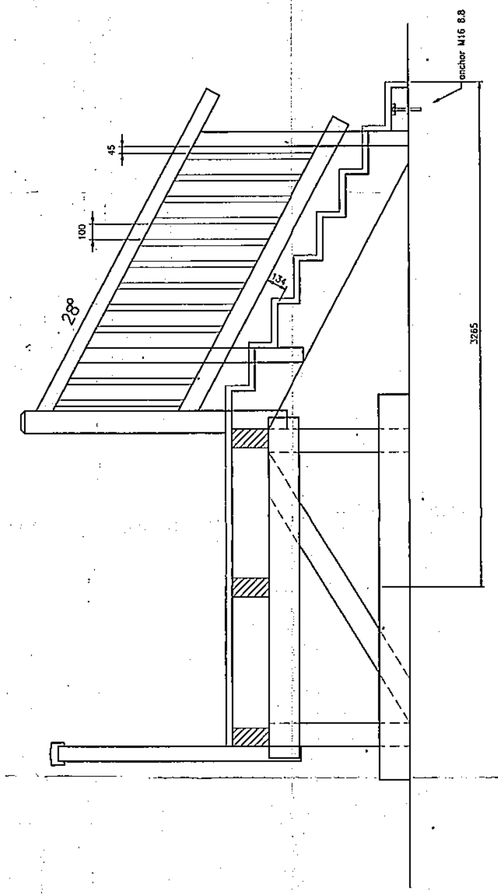

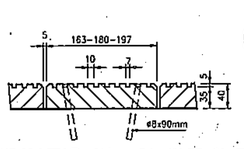

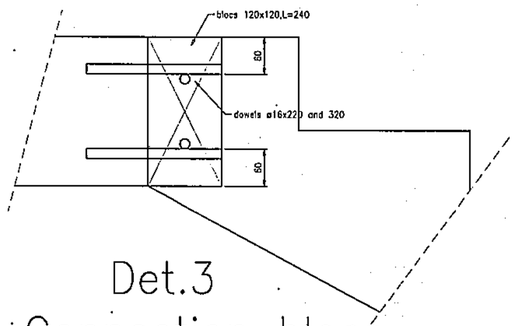

15 OCT 2002
14 OCT 2002
RECEIVED

Nr.	Date issue	Design	Drawn	Checked	Description revision/addition

Principal: Queens Moat Houses

Date approval:

Date issue: 10-10-2002

Name structure: Moat House Hotel footbridge

Design: BE

Drawn: BE

Part structure: Parts A-B-C-D

Checked:

Scale: 1:20

Drawingnr. - part: E2940/3

SHS Sarum Hardwood Structures Limited
124/126 Stockbridge Road
Winchester, Hampshire, SO22 6RN
Tel.: 01962 863677
Fax: 01962 842292

Sheet: Tek3

PREFAZO® Type 1

"This document contains information proprietary to GROOT CONSULTANTS B.V. Any disclosure or use of the proprietary information or reproduction of this document is expressly prohibited except as GROOT CONSULTANTS B.V. may otherwise agree in writing"

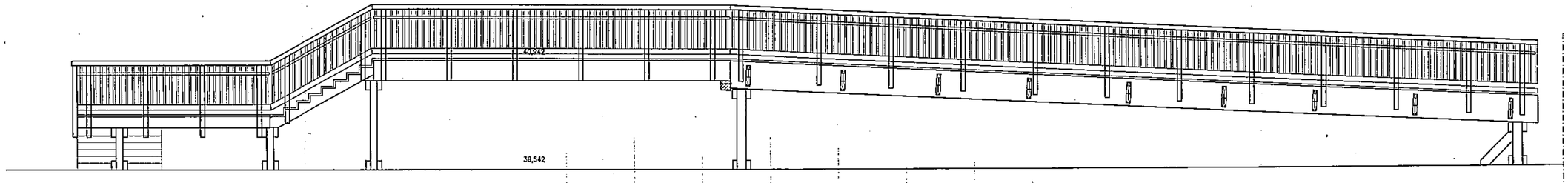

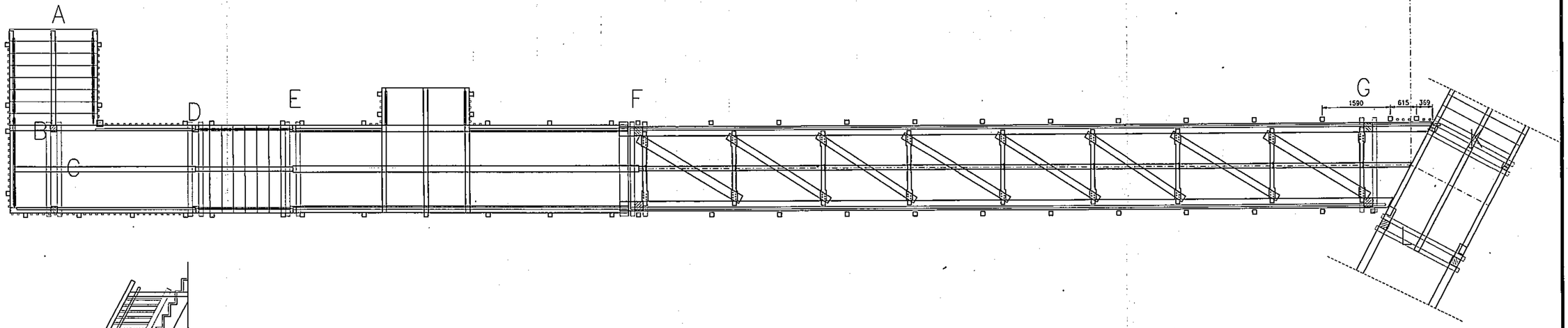

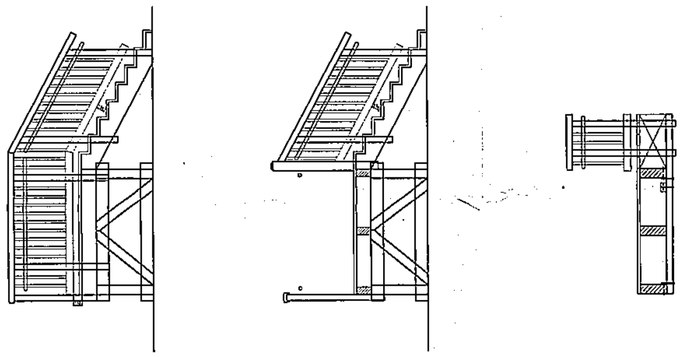

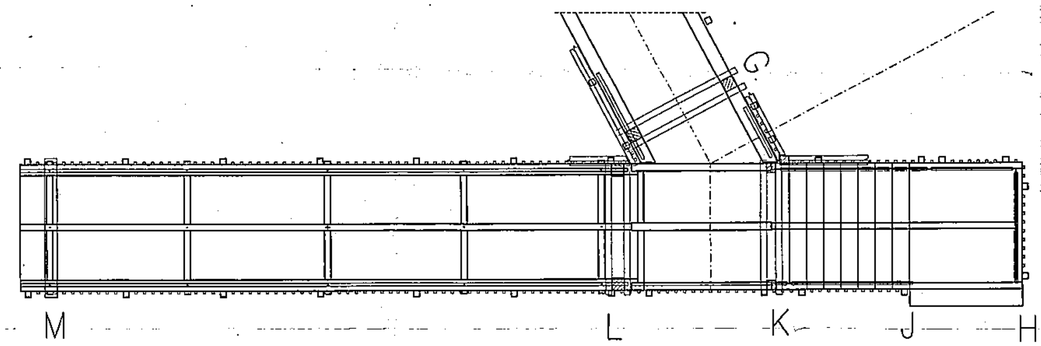

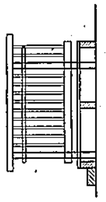

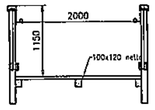

Cross–section stairs

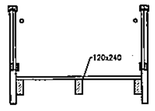

Cross–section CD

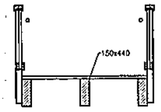

Cross–section EF

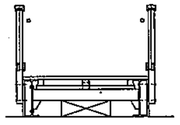

Cross–section FG

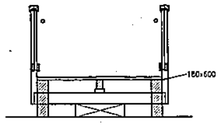

Cross–section LM

Cross–sections 1:50

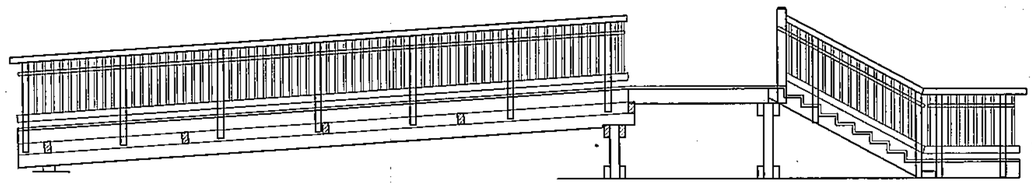

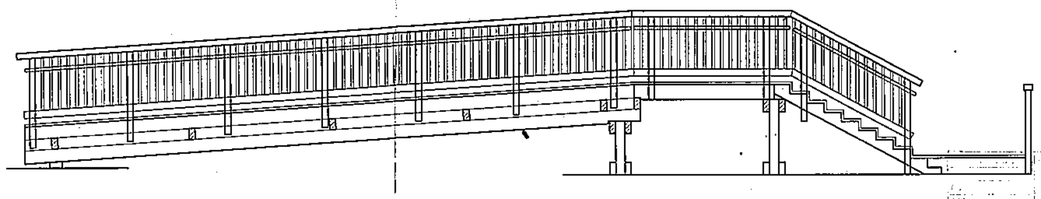

RECEIVED
14 OCT 2002
RECEIVED
15 OCT 2002

Nr.	Date issue	Design	Drawn	Checked	Description revision/addition

Principal: Queens Moat Houses

Date approval:

Date issue: 10-Okt 2002

Name structure: Moat House Hotel footbridge

Design: 1:50

Drawn: 1:50

Part structure: General arrangement

Checked:

Scale: 1:50

Drawingnr. – part: E2940/g.a.

Sheet: Tekpar

PREFAZO[3] Type

SHS Sarum Hardwood Structures Limited
124/126 Stockbridge Road
Winchester, Hampshire, SO22 6RN
Tel.: 01962 863577
Fax: 01962 842202

"This document contains information proprietary to GROOT CONSULTANTS B.V. Any disclosure or use of the proprietary information or reproduction of this document is expressly prohibited except as GROOT CONSULTANTS B.V. may otherwise agree in writing"

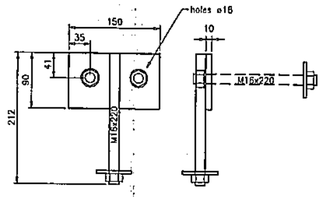

bracket Det.4 1:5

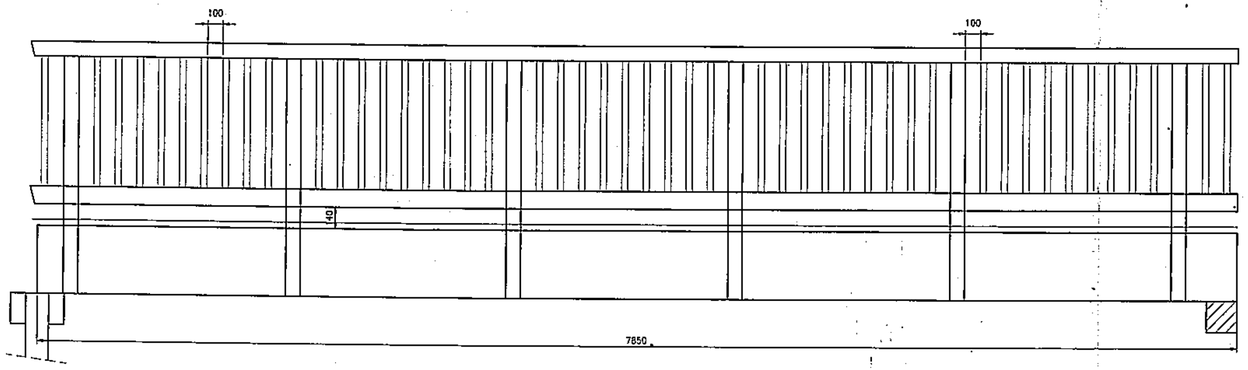

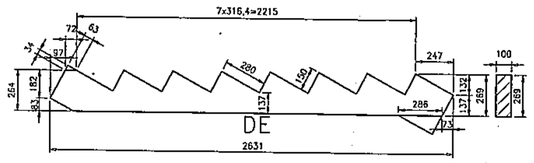

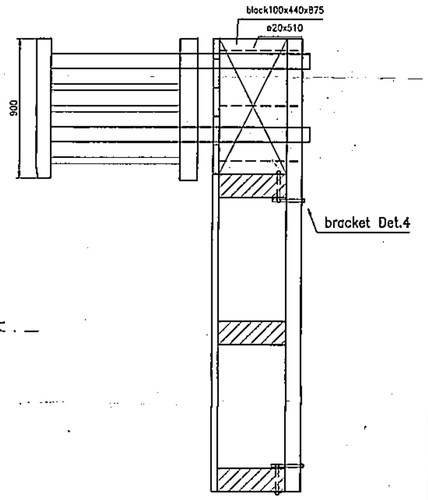

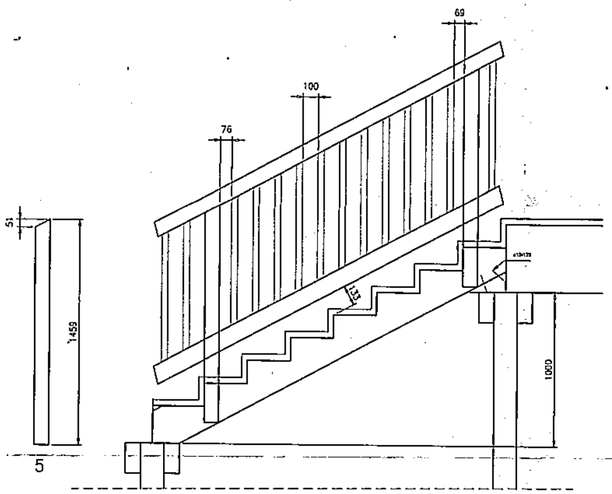

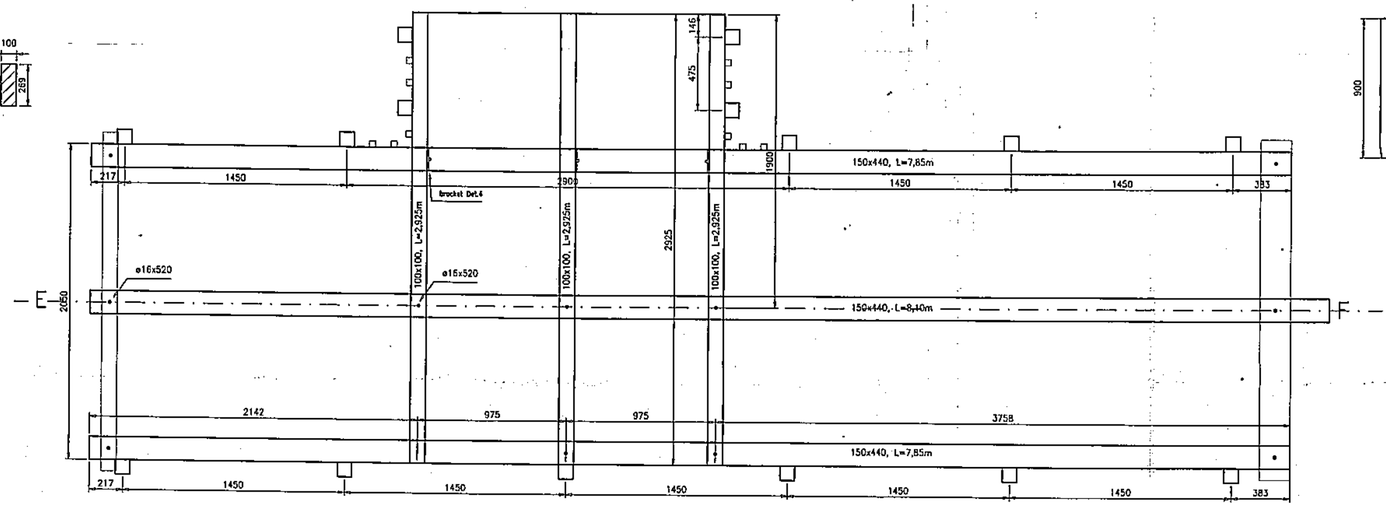

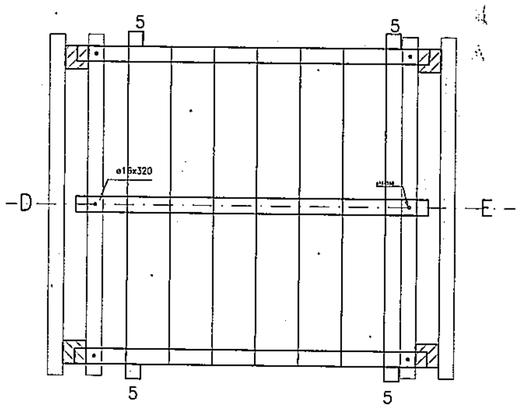

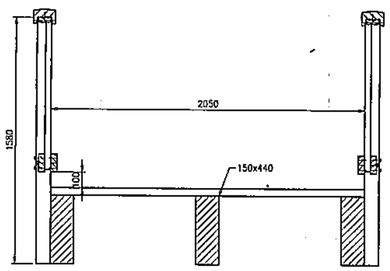

Cross–section EF 1:20

13 OCT 2002
SHS
14 OCT 2002
RECEIVED

Nr.	Date issue	Design	Drawn	Checked	Description revision/addition

Principal:
Queens Moat Houses

Date approval:

Date issue:
10–10–2002

Name structure:
Moat House Hotel footbridge

Design:
BE

Drawn:
BE

Part structure:
Parts D–E–F

Checked:

Scale:
1:20

Drawingnr. – part:
E2940/4

SHS Sarum Hardwood Structures Limited
124/126 Stockbridge Road
Winchester, Hampshire, SO22 6RN
Tel.: 01962 883677
Fax: 01962 842292

Sheet:
Tek4

PREFAZO® Type 1

"This document contains information proprietary to GROOT CONSULTANTS B.V. Any disclosure or use of the proprietary information or reproduction of this document is expressly prohibited except as GROOT CONSULTANTS B.V. may otherwise agree in writing"

Proposed Slab/Foundations/Removable Central Supp[illegible]t - Poachers Inn

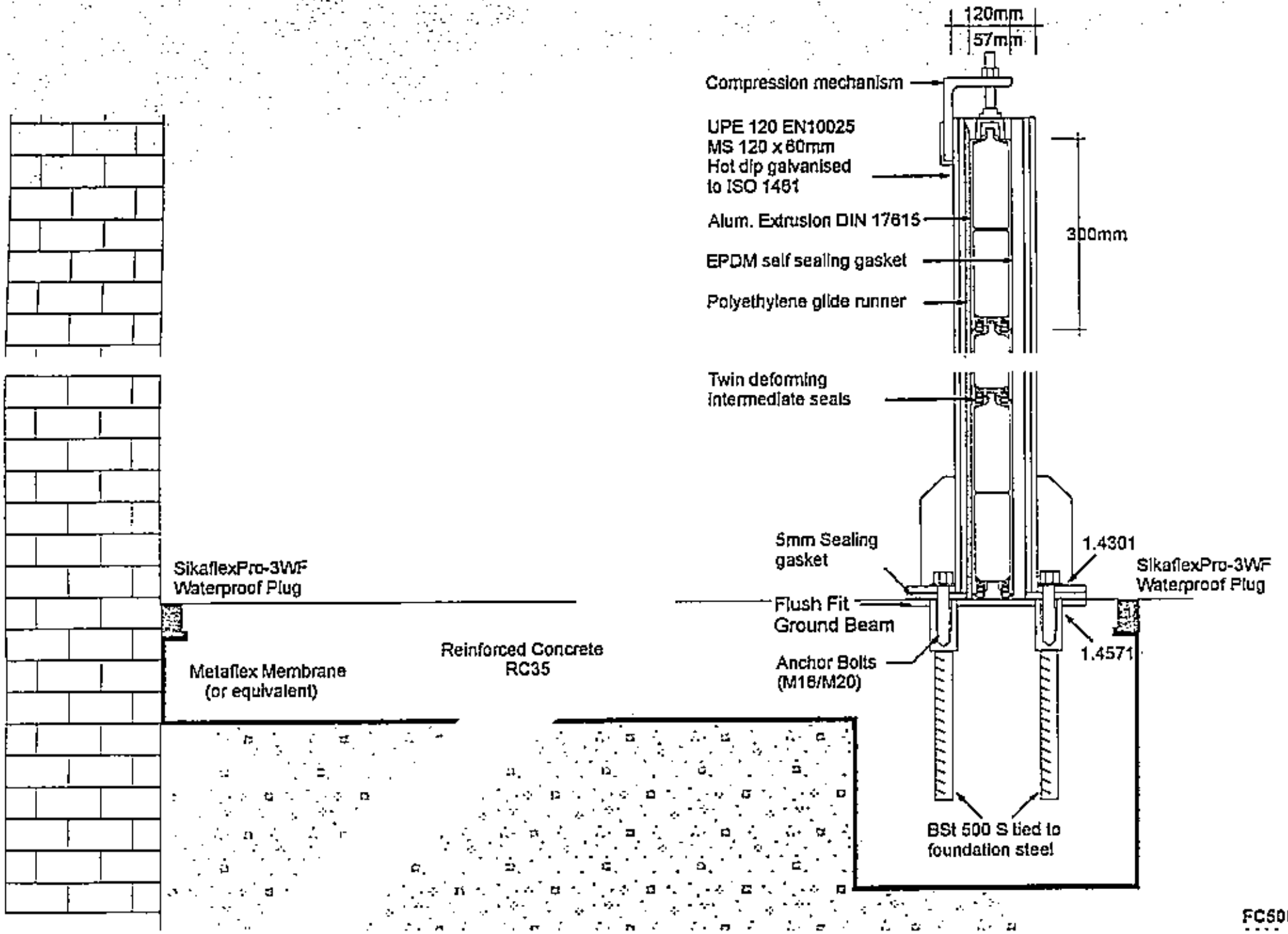

FC60013-

NOTES

1. Refer to the latest revision of drawing 201033/03 for notes.

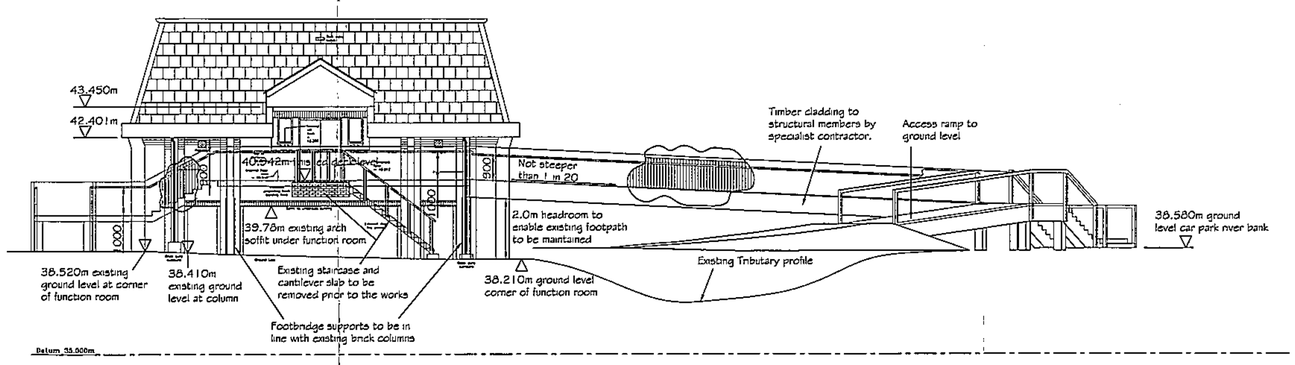

Elevation of Main Span and Emergency Exit

Scale 1:100

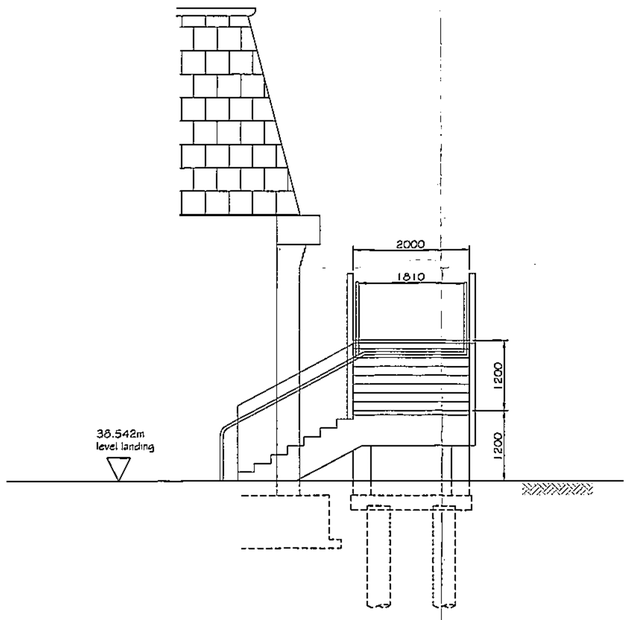

Elevation of Steps near Hotel Entrance

Scale 1:50

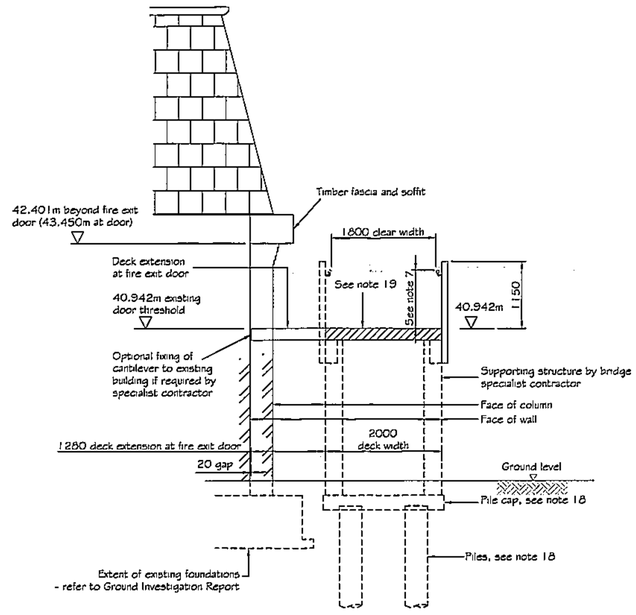

Indicative Cross Section A-A at Fire Exit Door

Scale 1:50



Elevation of steps on River Bank

Scale 1:50

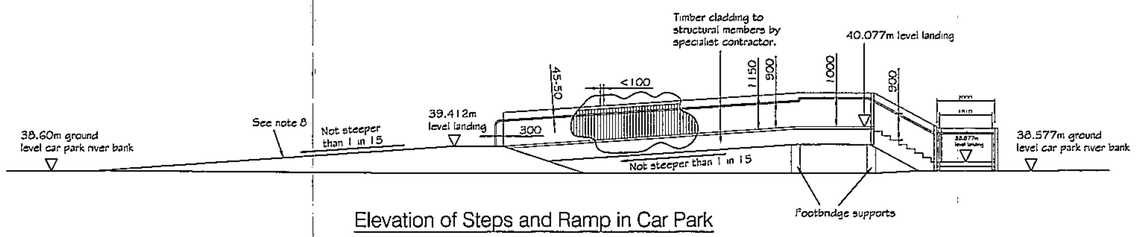

Elevation of Steps and Ramp in Car Park

Scale 1:100

APPROVED

Rev	Description	Dr	Ch	Date
P1	Initial Issue	TU	...	...

Client: Queens Moat Houses

Project: Queens Moat House - Reading
Proposed Footbridge and Flood Mitigation Measures

Title: Indicative Details of Footbridge
Plan 2

Hannah · Reed
Telford House, Fulbourn, Cambridge, CB1 5HB
Telephone 01223 882000
Fax 01223 881888
e-mail cambridge@hannah-reed.co.uk

Sheet Size	A1
Drawn	TU
Checked	JFX
Approved	
Scale	Refer to drawing
Drawing Number	201033/04
Rev	P1

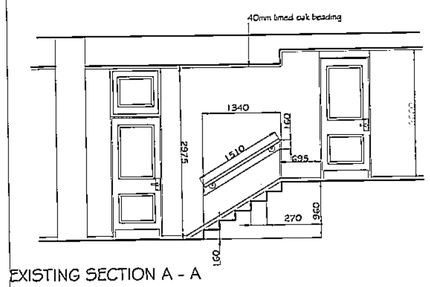

EXISTING SECTION A - A

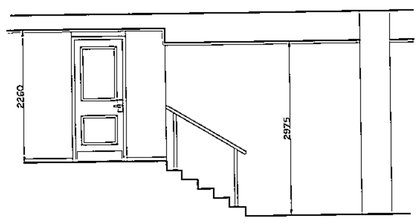

EXISTING SECTION B - B

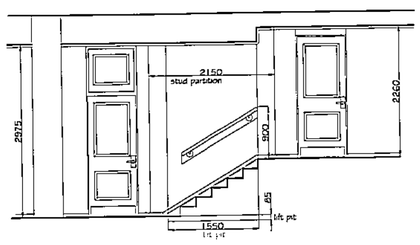

PROPOSED SECTION A - A

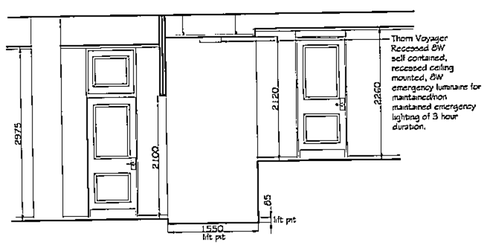

PROPOSED SECTION THROUGH LIFT SHAFT C - C

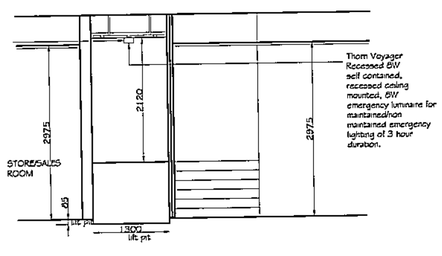

PROPOSED SECTION THROUGH LIFT SHAFT D -D

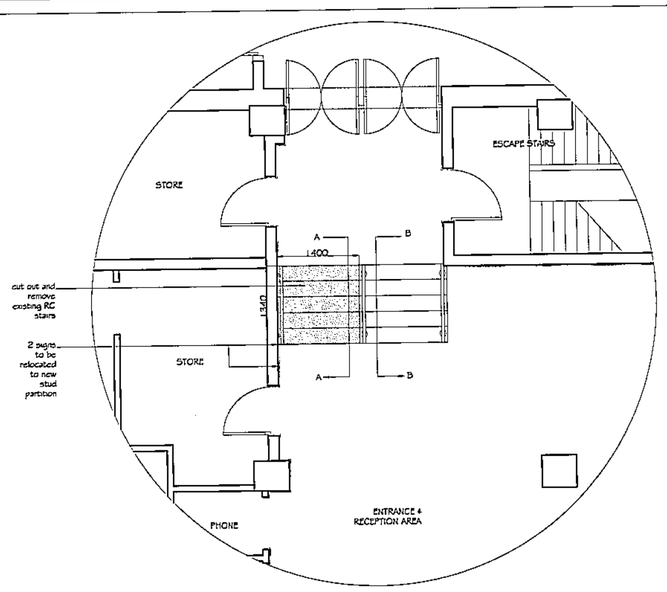

EXISTING FLOOR PLAN - PLATFORM LIFT TO RECEPTION

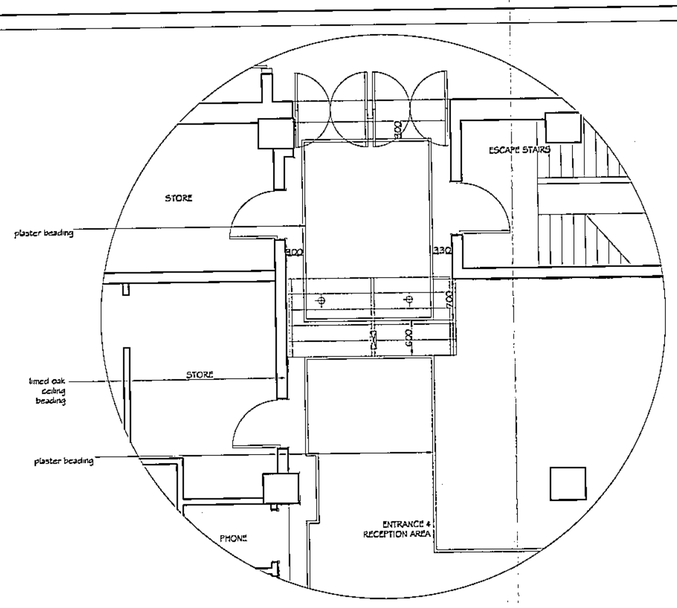

EXISTING CEILING PLAN

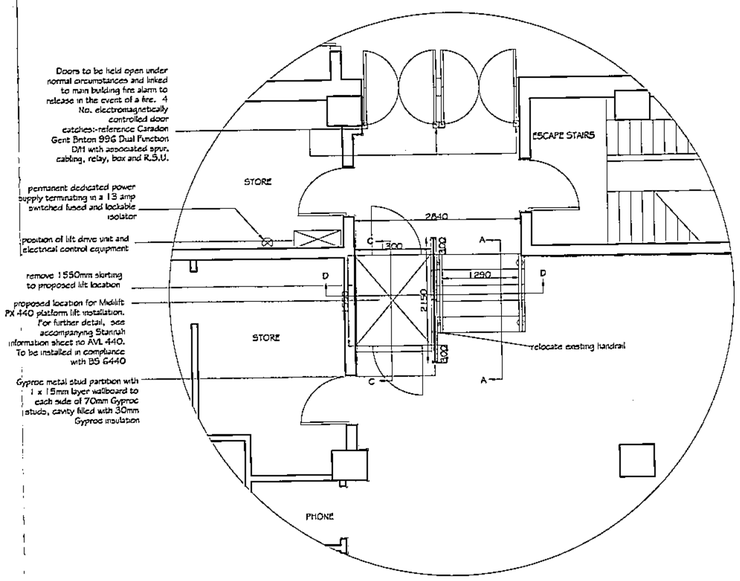

PROPOSED FLOOR PLAN - PLATFORM LIFT TO RECEPTION

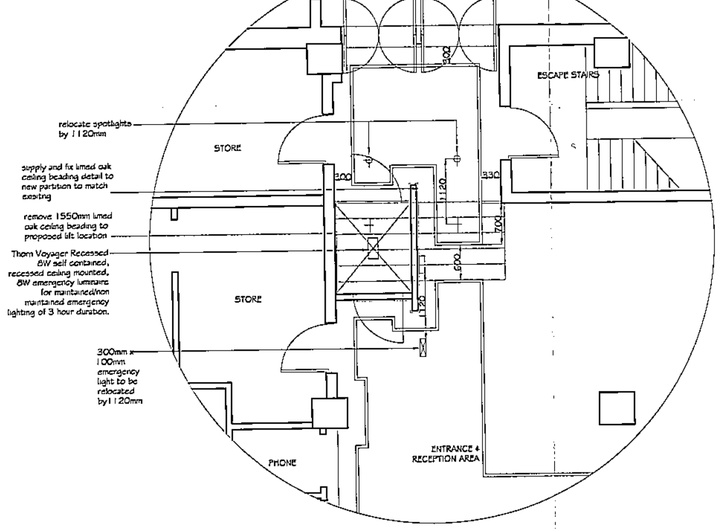

PROPOSED CEILING PLAN

PROPOSED LIFT DOORS EXTERNAL/ RECEPTION FACE

scale 1:20

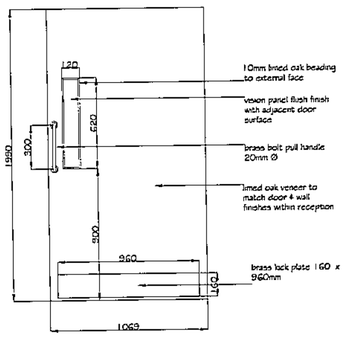

PROPOSED LIFT DOORS INTERNAL FACE

scale 1:20

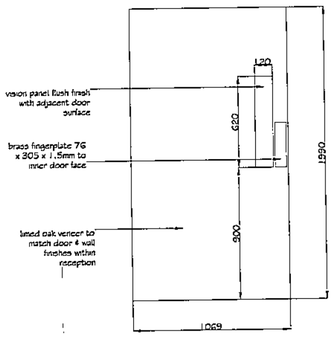

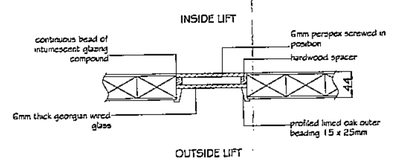

SECTION THROUGH DOOR

GENERAL NOTES

DO NOT SCALE FROM THIS DRAWING
All dimensions in millimetres (mm) unless noted otherwise.

This drawing is to be read in conjunction with any/all other documents issued by Davis Langdon & Everest for this project.

PLANNING SERVICES DEPT
REV
DATE
BY
13 SEP 2002
REPLACED BY
REPLACES

ADDITIONAL PLAN

7051 rev 02

7079 rev 1

APPROVED

DAVIS LANGDON & EVEREST
Clarence House, Riverside, New Bailey Street
Manchester M3 5AG
Telephone: 0161 819 7600
Fax No: 0161 819 1818

Client:
QMH

Project
QMH

Job
READING MOAT HOUSE
FLOOD MITIGATION WORKS

Title
PROPOSED PLAN:- ENTRANCE FOYER

Job No	File Name
24460	RMH 2GOG02
Drg No	Rev
24460/RMH/07	1
Date	Drawn by
26_06_02	ASB
Scale	Checked by
1:50	AGP

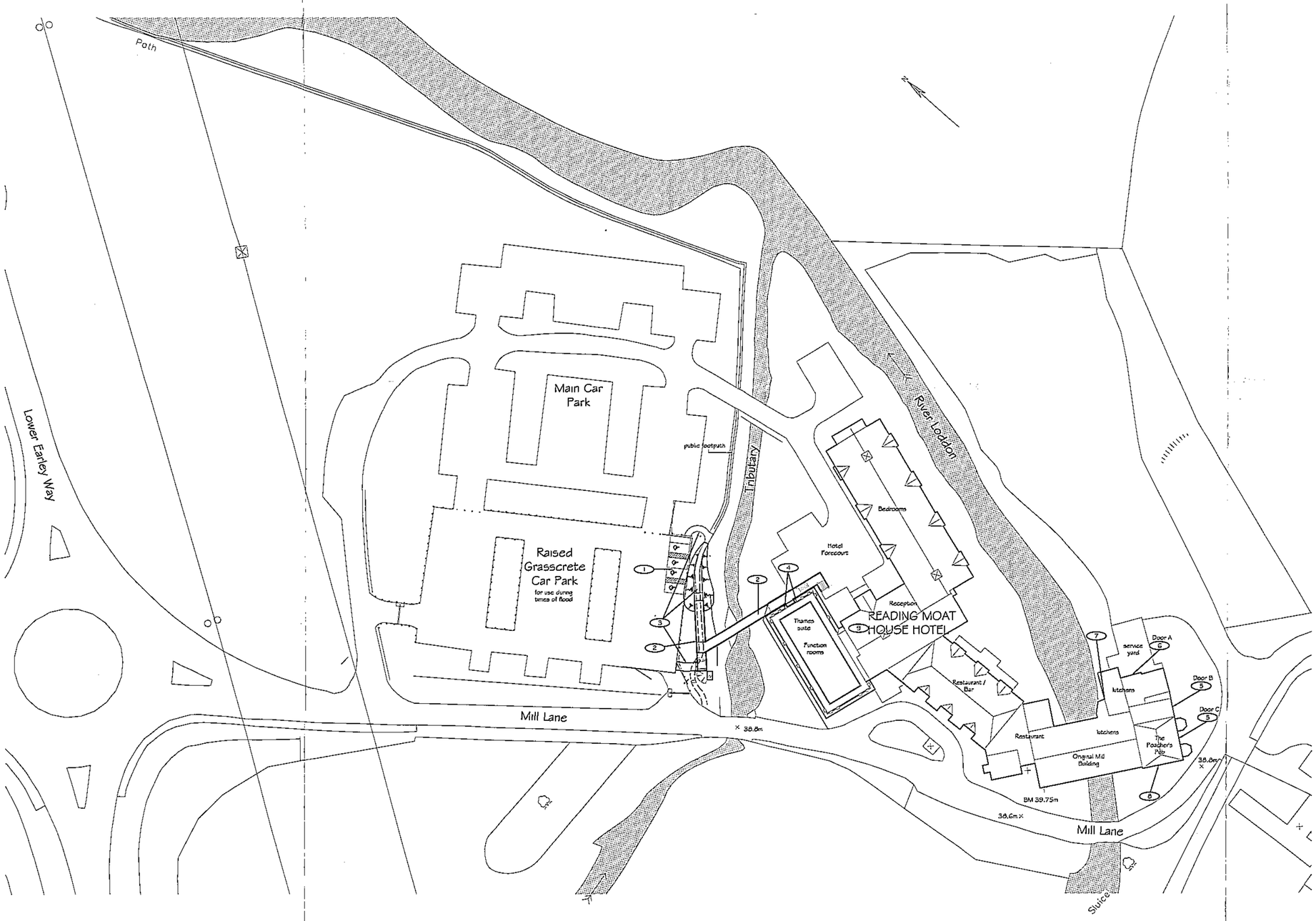

GENERAL NOTES

DO NOT SCALE FROM THIS DRAWING
All dimensions in millimetres (mm) unless noted otherwise.

This drawing is to be read in conjunction with anyfall other documents issued by Davis Langdon & Everest for this project.

KEY TO ITEMS OF WORK

1. DISABLED CAR PARKING SPACES
2. FOOTBRIDGE ADJACENT TO CONFERENCE ROOMS
   Hannah Reed drawing reference 201033/03 P5 and 201033/04 P1
3. PATH LINKING FOOTBRIDGE TO RAISED CAR PARK
   Hannah Reed drawing reference 201033/03 P5 and 201033/04 P1
4. WINDOWS TO FUNCTION ROOMS
   see drawing 24460RMH/06
5. FLOOD BARRIER INSTALLATION TO PUB ENTRANCES
   Door B: Flood Control Ltd drawing refs 6000-1191/2; 5008.08a
   Door C: Flood Control Ltd drawing refs 6000-1191/3; 5008.08a
6. FLOOD BARRIER INSTALLATION WITHIN SERVICE YARD
   Door A: Flood Control Ltd drawing refs 6000-1191/1; 6000-1191/4; 6000-1191/5
7. SEALANT WORKS TO WALL JUNCTION
8. INSTALLATION OF 5 No. REMOVABLE AIR BRICK COVERS TO PERIMETER WALL OF POACHERS PUB
   Flood Control Ltd drawing ref 4000.23c
9. PLATFORM LIFT INSTALLATION IN RECEPTION
   Drawing reference 24460RMH/06, 24460RMH/07

REVISED PLAN

7051

7079

PLANNING
13 SEP 2002

DAVIS LANGDON & EVEREST
Cloister House, Riverside, New Bailey Street
Manchester M3 5AG
Telephone: 0161 819 7600
Fax No: 0161 819 1818

Client: GMH

Project: GMH

Job: READING MOAT HOUSE FLOOD MITIGATION WORKS

Title: PROPOSED SITE PLAN

APPROVED

Job No	File Name
24460	READING SITE PLAN
Drg No	Rev
24460RMH/02	2
Date	Drawn by
15_05_02	ASB
Scale	Checked by
1:1250	DMB

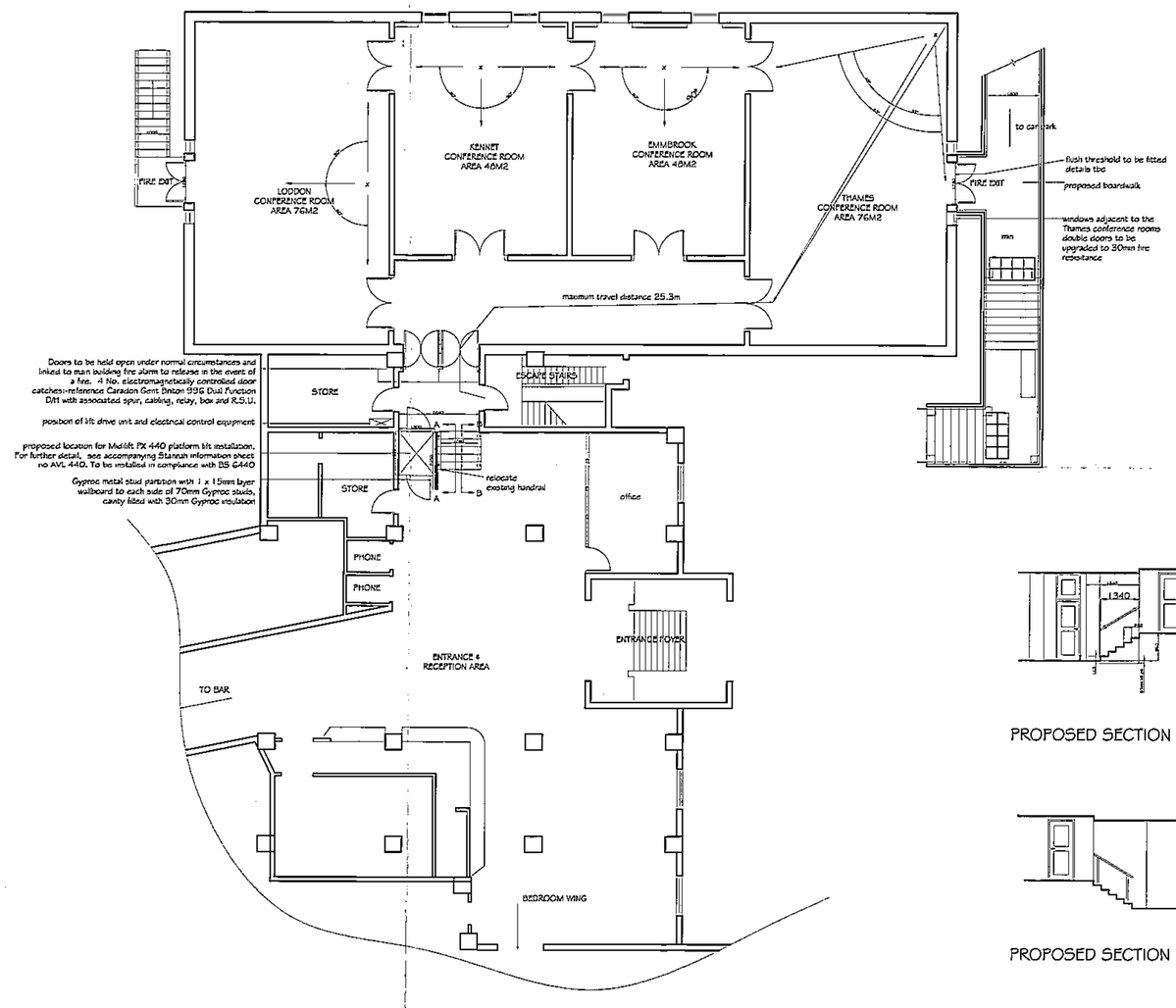

PROPOSED PLAN: ENTRANCE FOYER & CONFERENCE ROOMS

PROPOSED SECTION A - A

PROPOSED SECTION B - B

GLAZING SECTION FOR REPLACEMENT WINDOWS ADJACENT THAMES FIRE EXIT

SCALE 1:2

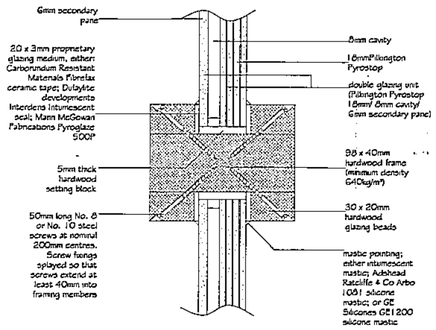

GENERAL NOTES

DO NOT SCALE FROM THIS DRAWING
All dimensions in millimetres (mm) unless noted otherwise.

This drawing is to be read in conjunction with anyall other documents issued by Davis Langdon & Everest for this project.



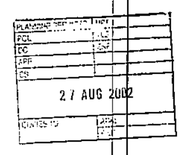

ADDITIONAL PLAN

7051
7079

DAVIS LANGDON & EVEREST
Cloister House, Riverside, New Bailey Street
Manchester M3 5AG
Telephone: 0161 819 7600
Fax No: 0161 819 1818

APPROVED

Client: QMH

Project: QMH

Job: READING MOAT HOUSE FLOOD MITIGATION WORKS

Title: PROPOSED PLAN:-ENTRANCE FOYER

Job No	File Name
24460	RMH 260802
Drg No	Rev
24460RMH106	I
Date	Drawn by
05_08_02	ASB
Scale	Checked by
1:100	AGP

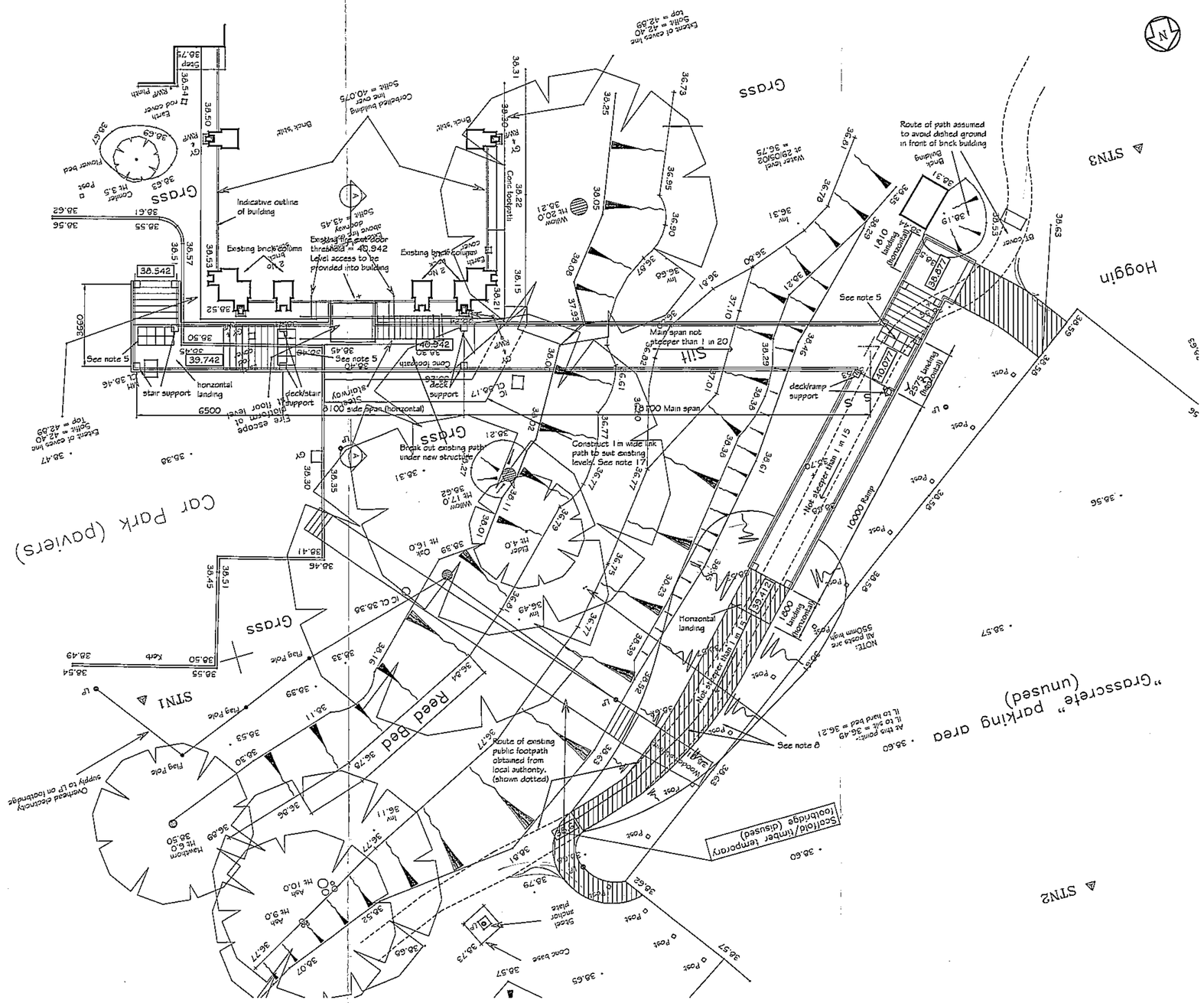
Grass
Indicative outline of building
Existing brick column
Existing brick column
Existing fire exit door threshold = 40.942 Level access to be provided into building
See note 5
See note 5
See note 5
Main span not steeper than 1 in 20
Slope
Conc footpath
Conc footpath
38.542
39.742
40.542
stair support
horizontal landing
deck/stair support
deck support
deck/ramp support
6500 side span (horizontal)
10000 Main span
10077
2575 Landing (Horizontal)
Break out existing path under new structure
Construct 1m wide link path to suit existing levels. See note 17
Grass
Grass
Grass
Car Park (paviers)
Reed Bed
Route of existing public footpath obtained from local authority. (shown dotted)
Horizontal landing
10000 Ramp
Not steeper than 1 in 15
See note 8
Timber footbridge (disused)
Steel erection plate
Core base
Hoggin
"Grasscrete" parking area (unused)
Route of path assumed to avoid dished ground in front of brick building
Brick building
Water level at 29/05/02 = 36.75
Existing ground level at top of bank = 42.89
Existing ground level at bottom of bank = 42.40
Overhead electricity supply to LP on footbridge
Flag Pole
Flag Pole
Flag Pole
Kerb
Post
Oak Ht 16.0
Ash Ht 9.0
Ash Ht 10.0
Hawthorn Ht 6.0
Willow Ht 17.0
Willow Ht 20.0
Cypress Ht 23.0
Conifer Ht 3.5
Flower bed
RWP
Earth
Brick wall
Brick wall
Cottage building
Step
Earth
Post
Post
Post

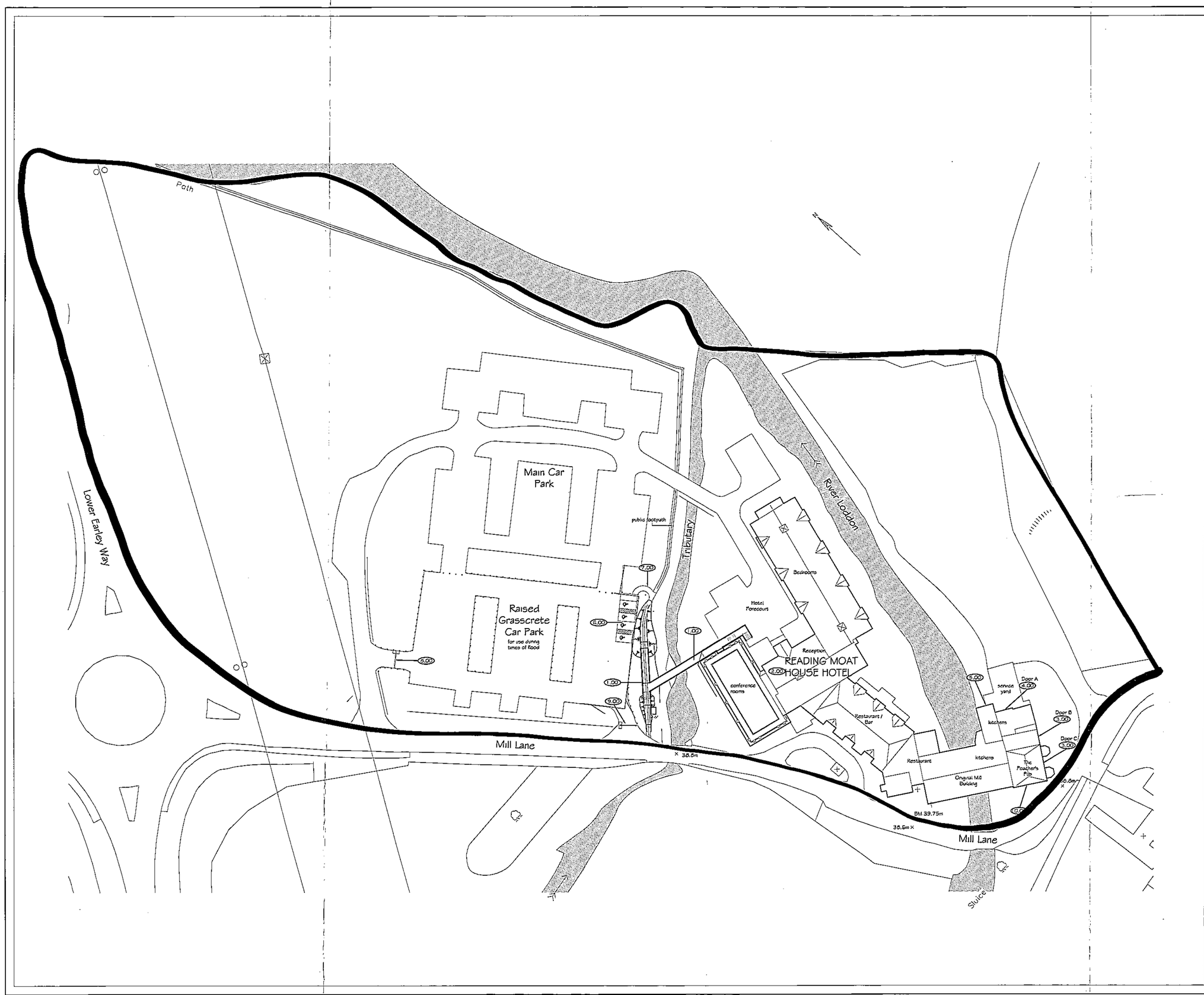

GENERAL NOTES

DO NOT SCALE FROM THIS DRAWING
All dimensions in milimetres (mm) unless noted otherwise.

This drawing is to be read in conjunction with anyfall other documents issued by Davis Langdon & Everest for this project.

KEY TO ITEMS OF WORK

1:00 FOOTBRIDGE ADJACENT TO CONFERENCE ROOMS
Hannah Reed drawing reference 201033/03 P3

2:00 PLATFORM LIFT INSTALLATION IN RECEPTION
Drawing reference 24460/RMH/06

3:00 FLOOD BARRIER INSTALLATION TO PUB ENTRANCES
Door B: Flood Control Ltd drawing refs 6000-1191/2; 5008.09a
Door C: Flood Control Ltd drawing refs 6000-1191/3; 5008.09a

4:00 FLOOD BARRIER INSTALLATION WITHIN SERVICE YARD
Door A: Flood Control Ltd drawing refs 6000-1191/1; 6000-1191/4; 6000-1191/5

5:00 SEALANT WORKS TO WALL JUNCTION

6:00 DISABLED CAR PARKING SPACES
Dimensions to be marked out 4800mm length x 6000mm width per two spaces incorporating 1200mm hatched access zone between each two adjacent spaces. Disabled parking symbol to be marked out 1400mm height to each bay.

7:00 PATH LINKING FOOTBRIDGE TO RAISED CAR PARK
Hannah Reed drawing reference 201033/03 P3

8:00 INSTALLATION OF APT BARRIER AT ENTRANCE TO RAISED CAR PARK
1 No. APT electronically operated bi-directional vehicle barrier including inductive loops

9:00 INSTALLATION OF APT BARRIER AT EXIT TO RAISED CAR PARK
1 No. APT manually operated mild steel counter balanced traffic barrier

0:00 INSTALLATION OF 5 No. REMOVABLE AIR BRICK COVERS TO PERIMETER WALL OF POACHERS PUB
Flood Control Ltd drawing ref 4000.23c

01.AUG.2002 7079
7079

SUPERCEDED

DAVIS LANGDON & EVEREST
Cloister House, Riverside, New Bailey Street
Manchester M3 5AG
Telephone: 0161 819 7600
Fax No: 0161 819 1818

Client:
QMH

Project
QMH

Job
READING MOAT HOUSE
FLOOD MITIGATION WORKS

Title
PROPOSED SITE PLAN

Job No	File Name
24460	READING SITE PLAN
Drg No	Rev
24460/RMH/02	0
Date	Drawn by
15_05_02	ASB
Scale	Checked by
1:1250	DMB

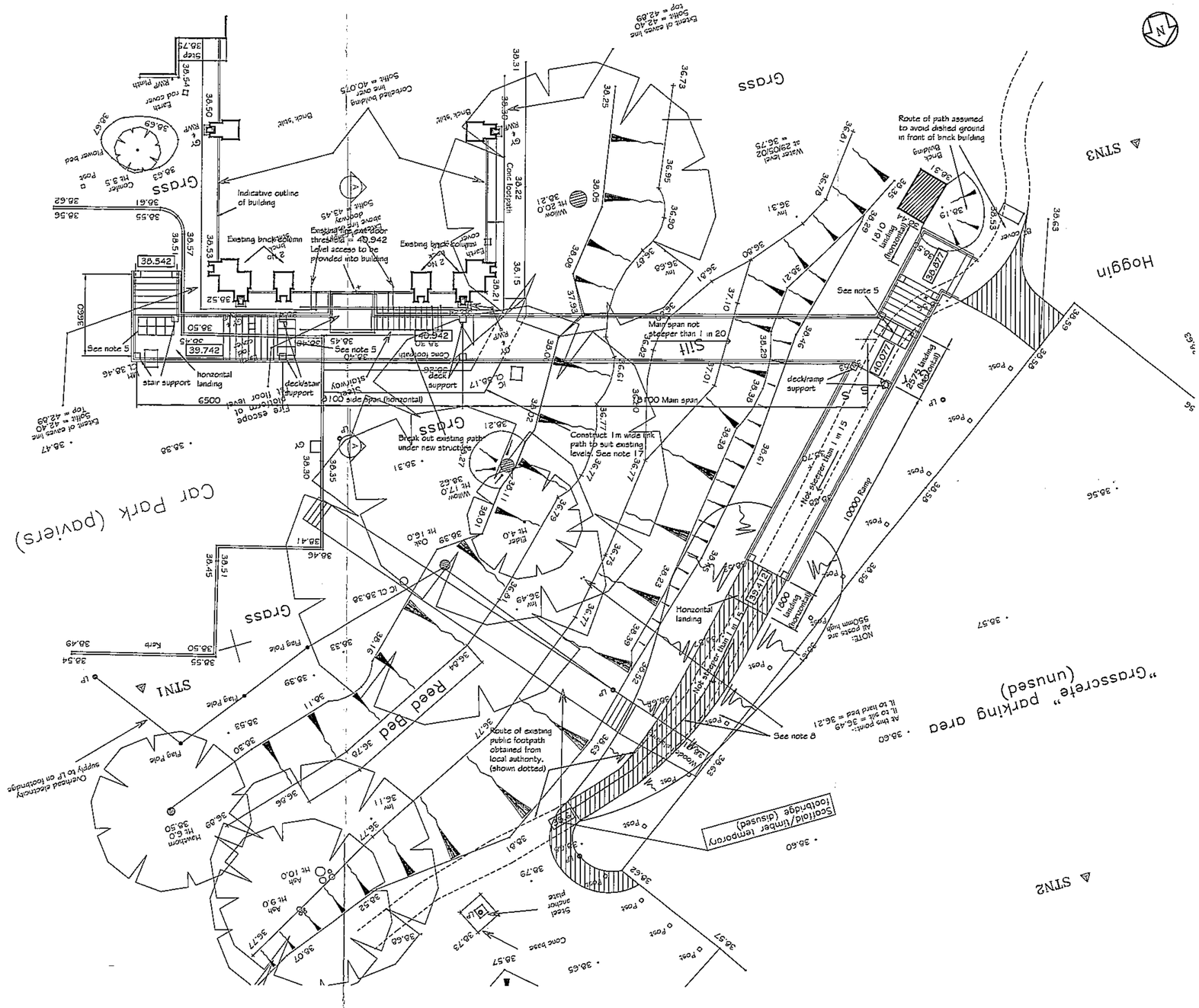

NOTES

1. DO NOT SCALE - Use figured dimensions only.
2. All dimensions shown are in millimetres unless otherwise stated.
3. The Contractor is to verify all dimensions on site before commencing work or preparing shop drawings.
4. This drawing is to be read in conjunction with all Engineers and Architects drawings and specifications.
5. Deck to receive tactile paved surface (corduroy paving) to the requirements of Building Regulations Document M: Item G.
6. All steps to have contrasting colour nosings. Colour and product to be approved by Davis Langdon and Everest.
7. Handrail to be in accordance with Building Regulations Document M: Diagram 5. Dimension to be 900mm above the surface of the ramp or the pitch line of a flight of steps, and 1000mm above the surface of a landing.
8. Footpath construction:-25mm depth of 6mm aggregate dense bitumen macadam surface course over 50mm depth of 20mm aggregate dense bitumen macadam basecourse to BS4987. Make up levels in granular type 2 material in maximum 150mm compacted layers. Path to be no steeper than 1:15 gradient. Place 150mm selected top soil and seed with minimum 25% creeping red fescue mix (Note: paved surface shown hatched).
9. Stair risers to be closed or if perforated the ratio of the open area to the total area shall not be more than 0.4.
10. Max. stair riser height = 150mm
11. Min. stair going length = 280mm
12. Handrails to extend 300mm beyond lower end of step or ramp in accordance with Building Regulations Document M: Diagram 4.
13. Parapet/stair - 100mm sphere must be unable to pass through any opening/gap in members
14. Parapet/stair - children must be unable to climb parapet (i.e no central horizontal member etc.)
15. Provision to be made for footbridge lighting - details to be confirmed
16. All footbridge elements, including supporting members to be Ekki hardwood or timber clad galvanised steel.
17. Footpath to be constructed in C25 air entrained concrete in 20mm aggregate using OPC cement. Slab to be 100mm thick unreinforced over 100mm thick compacted granular type 1 material. The surface shall have a tamped finish with 100mm wide smooth finish along the edges and joints.
18. Piles and pile caps to be designed, located and detailed by piling specialist contractors in accordance with section D30 of specification and the Ground Investigation Report.
19. Deck surface to have a non-slip grooved finish without any applied finishes

Key

40.000 Denotes finished level to bridge, ramp or stairs.

01.AUG.2002 7079

APPROVED

Rev	Description	Dr	Ch	Date
P4	Sections moved to drg 201033/004. Steps on river bank revised	TU	JFx	26.07.02
P3	Concrete footpath added, Note added to elevation, Dimensions added to cross-section, Note 8 and 15 amended,Note 16,18 & 19 added. Foundation details added to cross-section, additional dims added from structure. Tarmac footpath extended.	WJ	JFx	02.07.02
P2	Major Alterations and Additions	TU	JFx	20.06.02
P1	Initial Issue	TU	JFx/PT	16.06.02

Client: Queens Moat Houses

Project: Queens Moat House - Reading
Proposed Footbridge and Flood Mitigation Measures

Title: Indicative Details of Footbridge
Plan 1

Hannah · Reed
Telford House, Fulbourn, Cambridge, CB1 5HB
Telephone: 01223 880000
Fax: 01223 881888
e-mail: cambridge@hannahreed.co.uk

Sheet Size	A1
Scale	1:100 uno
Drawn	TU
Checked	JFX
Approved	
Drawing Number	201033/03
Rev	P4

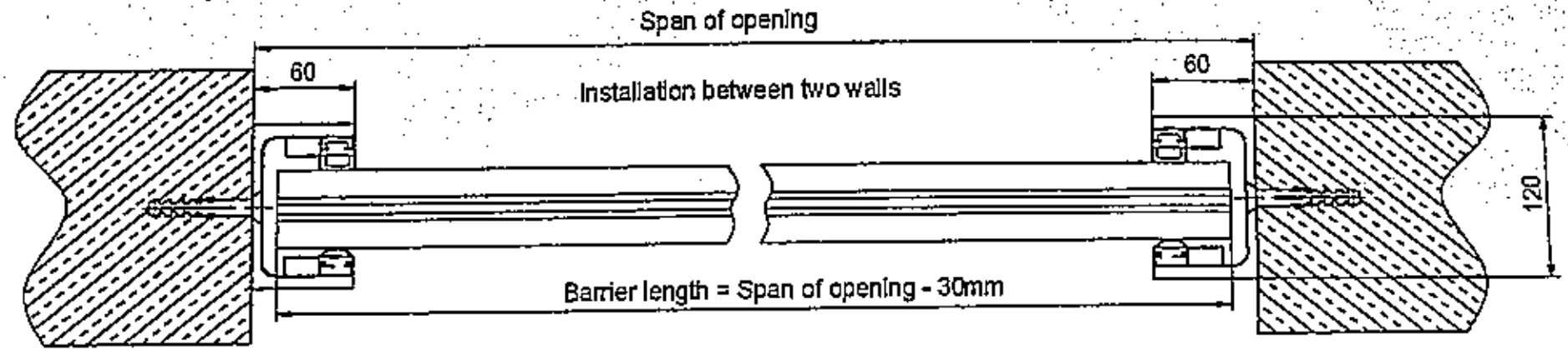

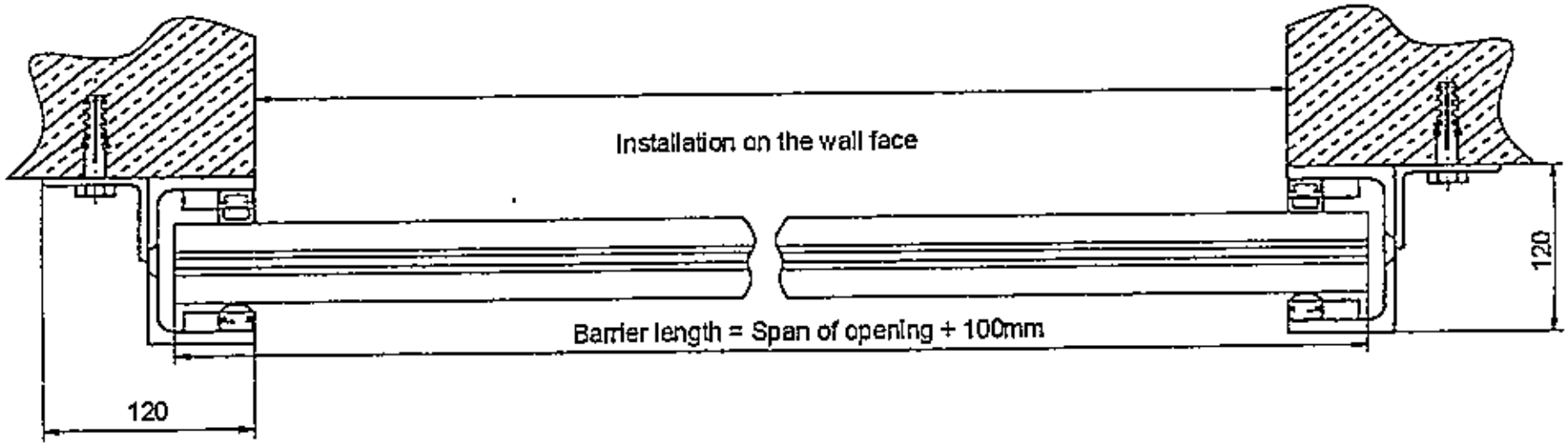

Usage Type	Tolerance	Scale	Weight
High Water Systems	ISO 2768-mk	Basic Product, Semi-Manufactured / Raw Material / Model or Die	Installation Diagram
1.Flood Guard	2001 Date Name Proc. 29.03 JAS Cert. Stand.	Name	Mounting options
		Drawing Number	Format
		5008.09a	

Single Airbrick Cover

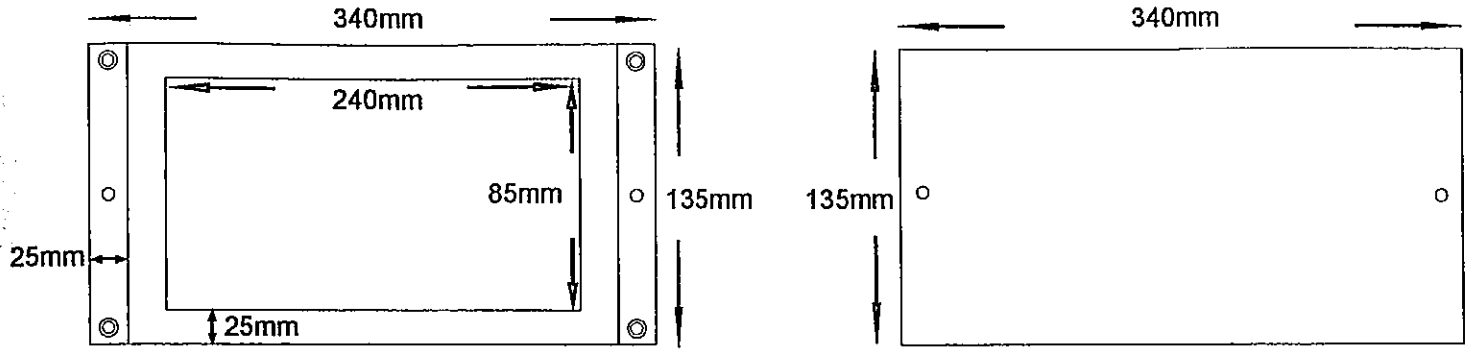

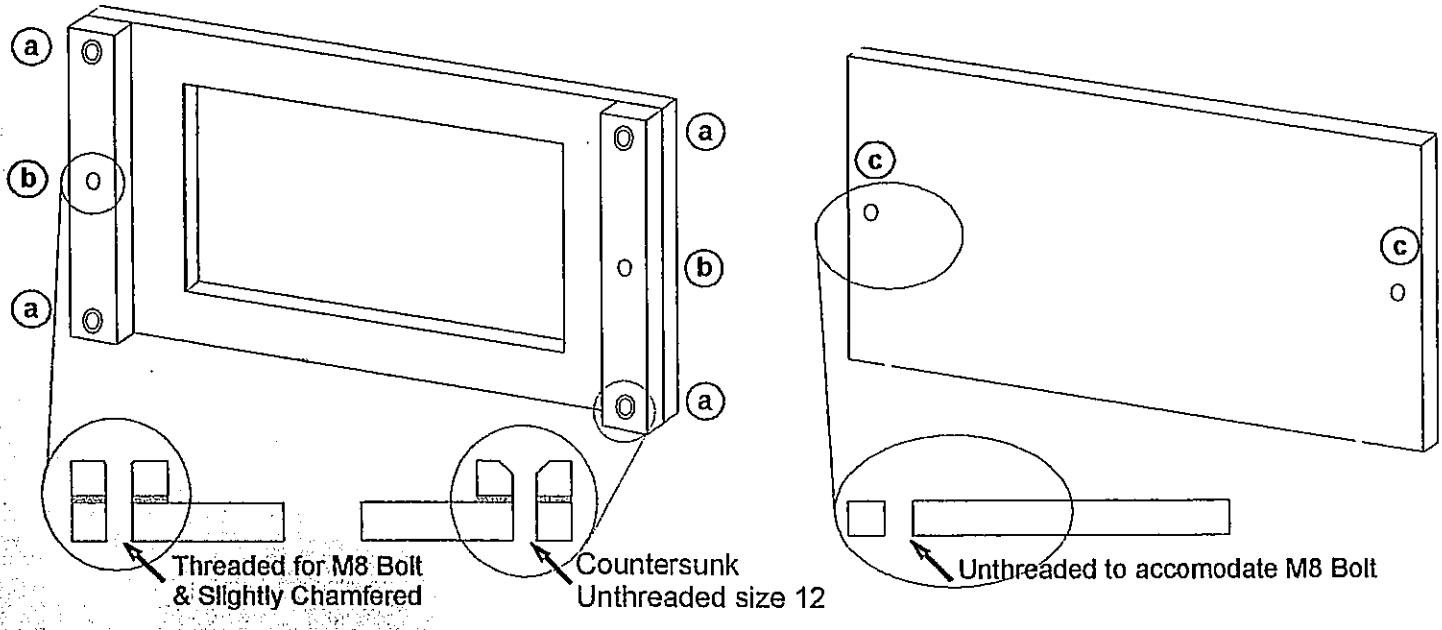

(a) Unthreaded countersunk for size 12 screws..

(b) Threaded Holes for M8 bolt - Slightly Chamfered.

(c) Unthreaded for size M8 bolts.

Usage Type: High Water Systems		Tolerance: ISO 2768-mk	
1 Flood Seal		1999 Date	Name
		Proc. 11.01	RS
		Cert.	
		Stand.	
Occ. Modification	Date Nam	Original	

Scale: Not to Scale — Weight:

Basic Product, Semi-Manufactured
Raw Material
Model or Die: Single brick

Name: Single Air Brick Cover Dimensions

Drawing Number: 4000.23c — Forma

© Flood Control Limited. All rights reserved. Not to be reproduced without permission.

Flood Control Limited

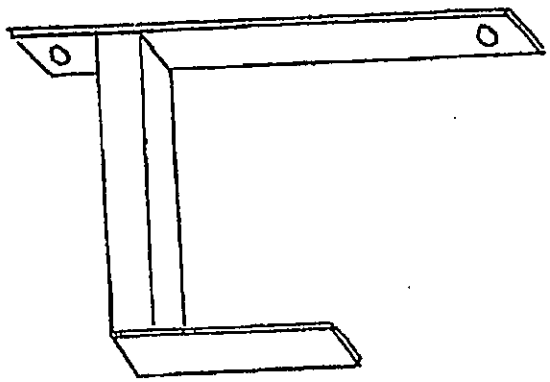

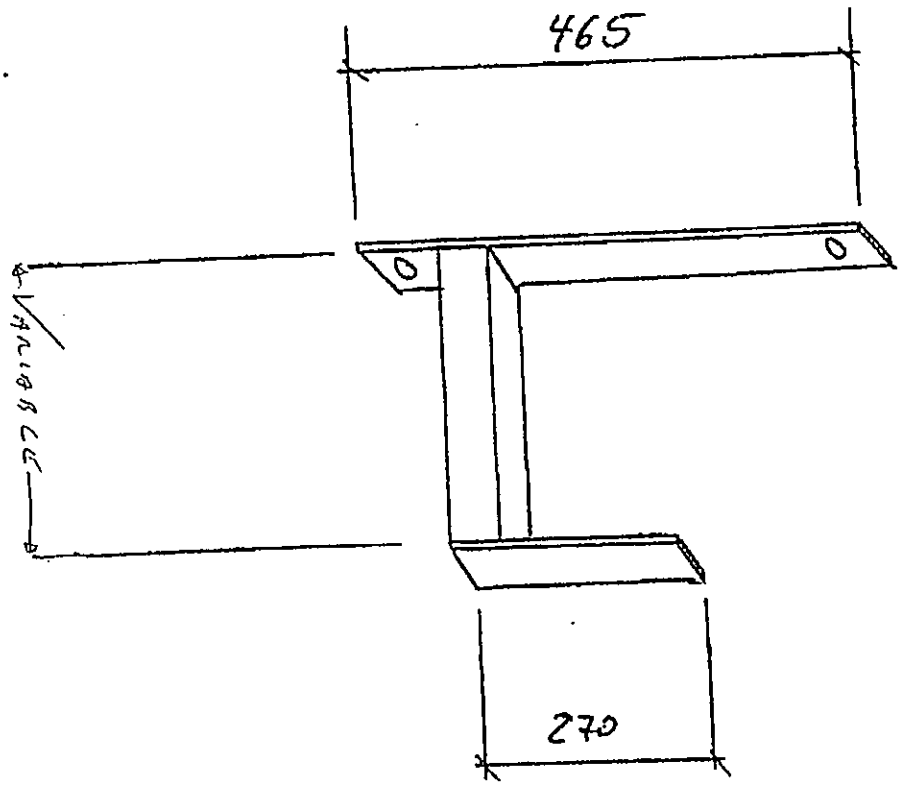

ENVIRONMENT AGENCY

Available in Welsh soon!

feedback • search • keywords



Zoom In

Zoom Out

Move to a Point

What's that on the map?

Select tool above, check the Query Layer (next to Data Layers) and click the map. More Help?

Scale: 1: 93750

© Crown Copyright All Rights Reserved GD03177G0000

Query Layer | Show Layer

Data Layers

- Pollution Inventory *[tell me more]*
  - Inventory Site
- Bathing Waters *[tell me more]*
  - Excellent
  - Good
  - Poor
  - No Class
- River Quality *[tell me more]*
  - Very Good
  - Good
  - Fairly Good
  - Fair
  - Poor
  - Bad
- Agency Offices *[tell me more]*
  - Head Office
  - Area Office
  - Regional Office
- Indicative Floodplain Maps *[tell me more]*
  - River
  - Sea
- Groundwater Protection Zones *[tell me more]*
- Discharges to Sea *[tell me more]*
  - Monitoring Zones

Refresh Maps

Click a symbol above to find out more.
What data do YOU want us to put here next? Email us now

01.AUG.2002 7079

Door 'A'

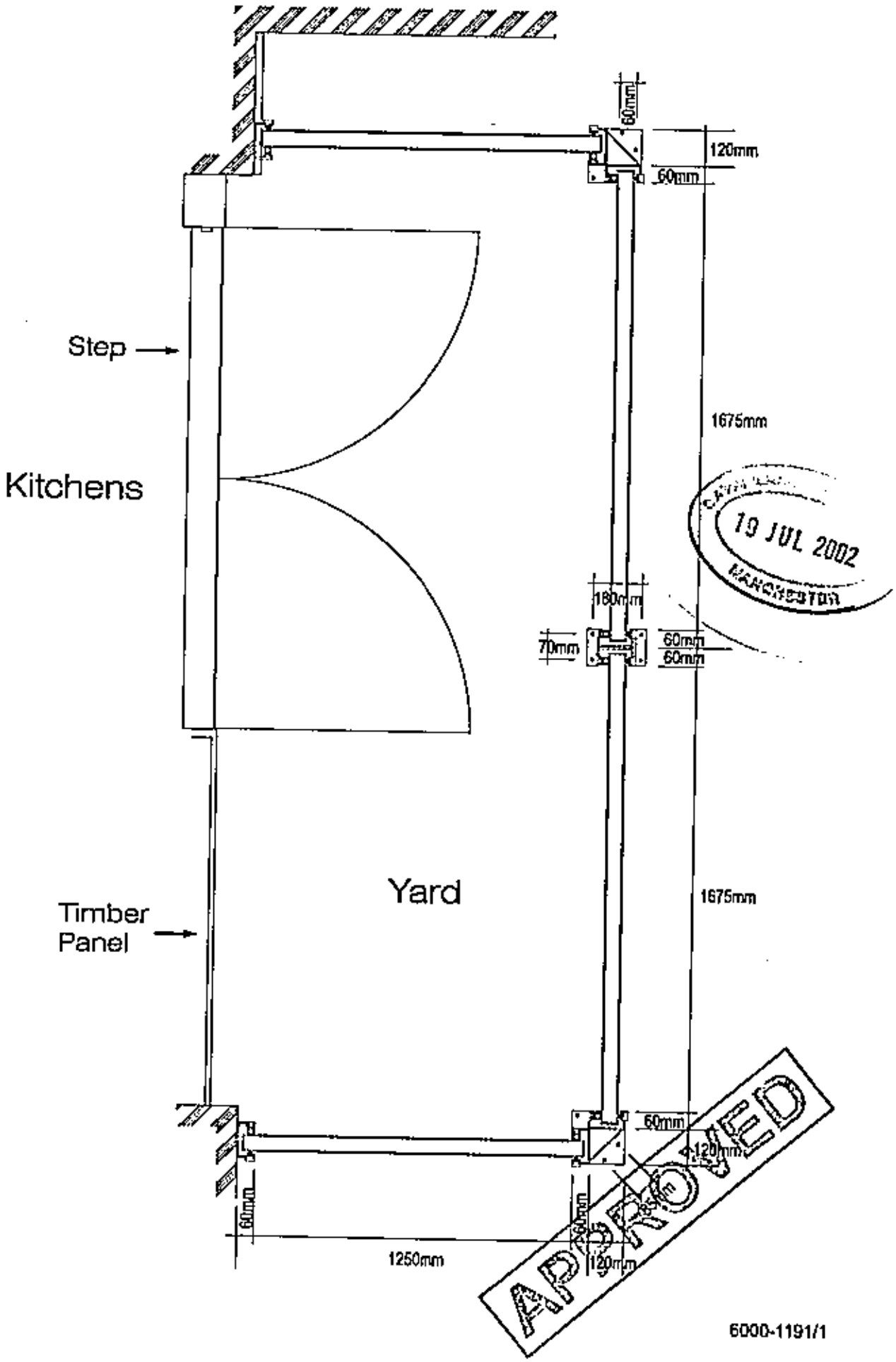

6000-1191/1