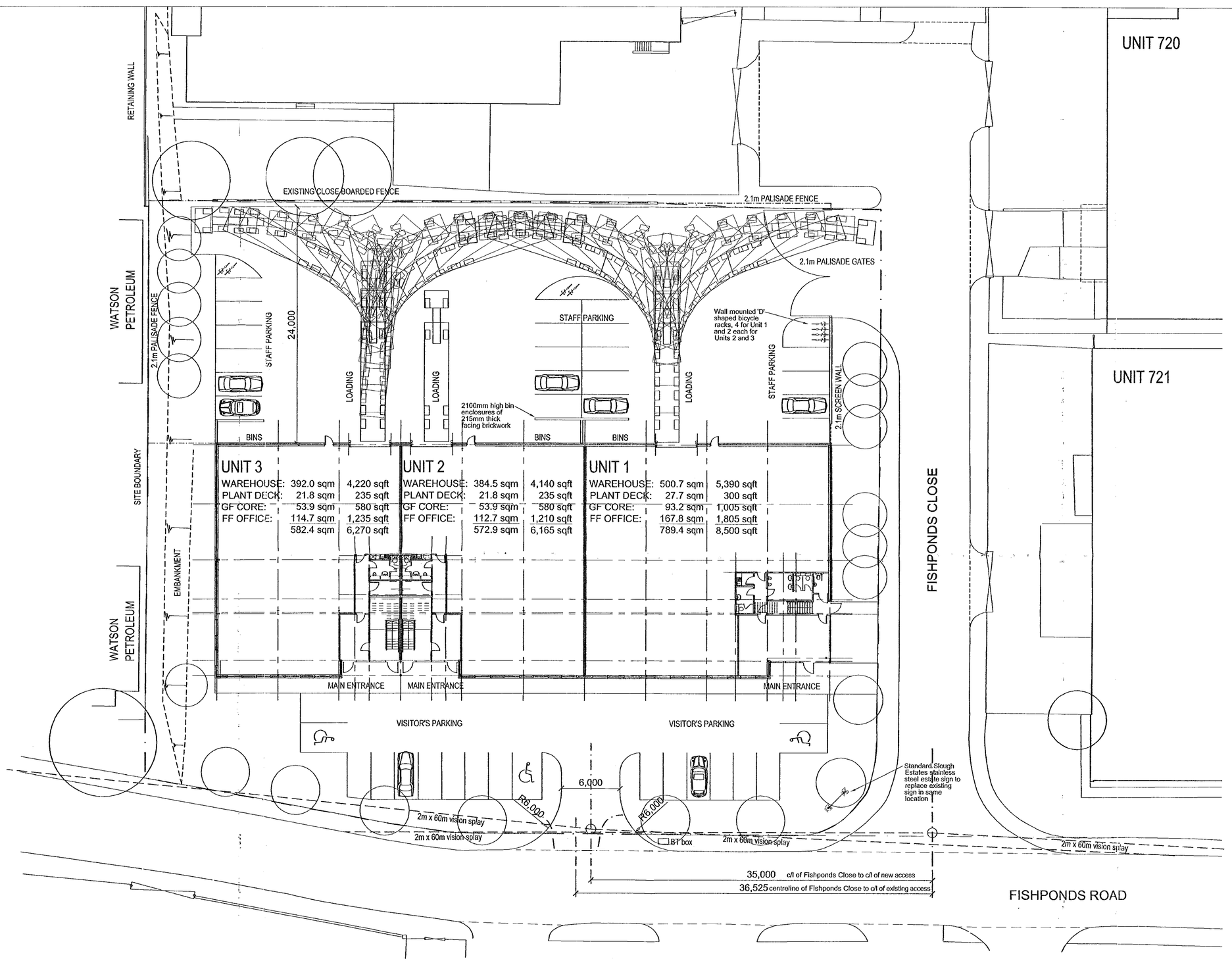

DEVELOPMENT ANALYSIS

SITE AREA	0.47 Ha (1.16 acres)
BUILDING AREA	1,944.7 sqm 20,935 sqft
COVERAGE	41.4%
PARKING SPACES	38 SPACES

21.FEB.2001 3460

APPROVED

E: 10/05/00
Vision splays amended to suit planning condition
Car parking to front of Units 1 and 3 amended

D: 17/04/00
Car parking and bin store to rear of Unit 3 moved away from boundary to ease slope on bank
Entrance to visitor's car park relocated to avoid BT box
Estate sign added

C: 07/04/00
Bin stores added

B: 23/03/00
Vision splays added to junctions with Fishponds Road
Fence line to west side of service yard relocated onto boundary

A: 18/01/00
Car parking noted a staff and visitor's
Bicycle parking added
New and existing accesses off Fishponds Lane dimensioned
Core plans for units 2 and 3 amended

Revisions

Job Title

PROPOSED REDEVELOPMENT

Location

FISHPONDS CLOSE
WOKINGHAM

Drawing Title

SITE PLAN

Date 26/11/99 Drawn

Scale 1:200 at A1 Checked

ALL DIMENSIONS TO BE CHECKED ON SITE. DO NOT SCALE
COPYRIGHT REMAINS WITH LANGLEY HALL ASSOCIATES LTD

LHA
Royal Station Court
Twyford Reading
Berkshire RG10 9NF
LANGLEY HALL ASSOCIATES LTD
Tel: 0118 932 0980
Fax: 0118 932 0981

Dwg no. 1465-01 Revision E

SLOUGH ESTATES THE GATEWAY

ELEVATION

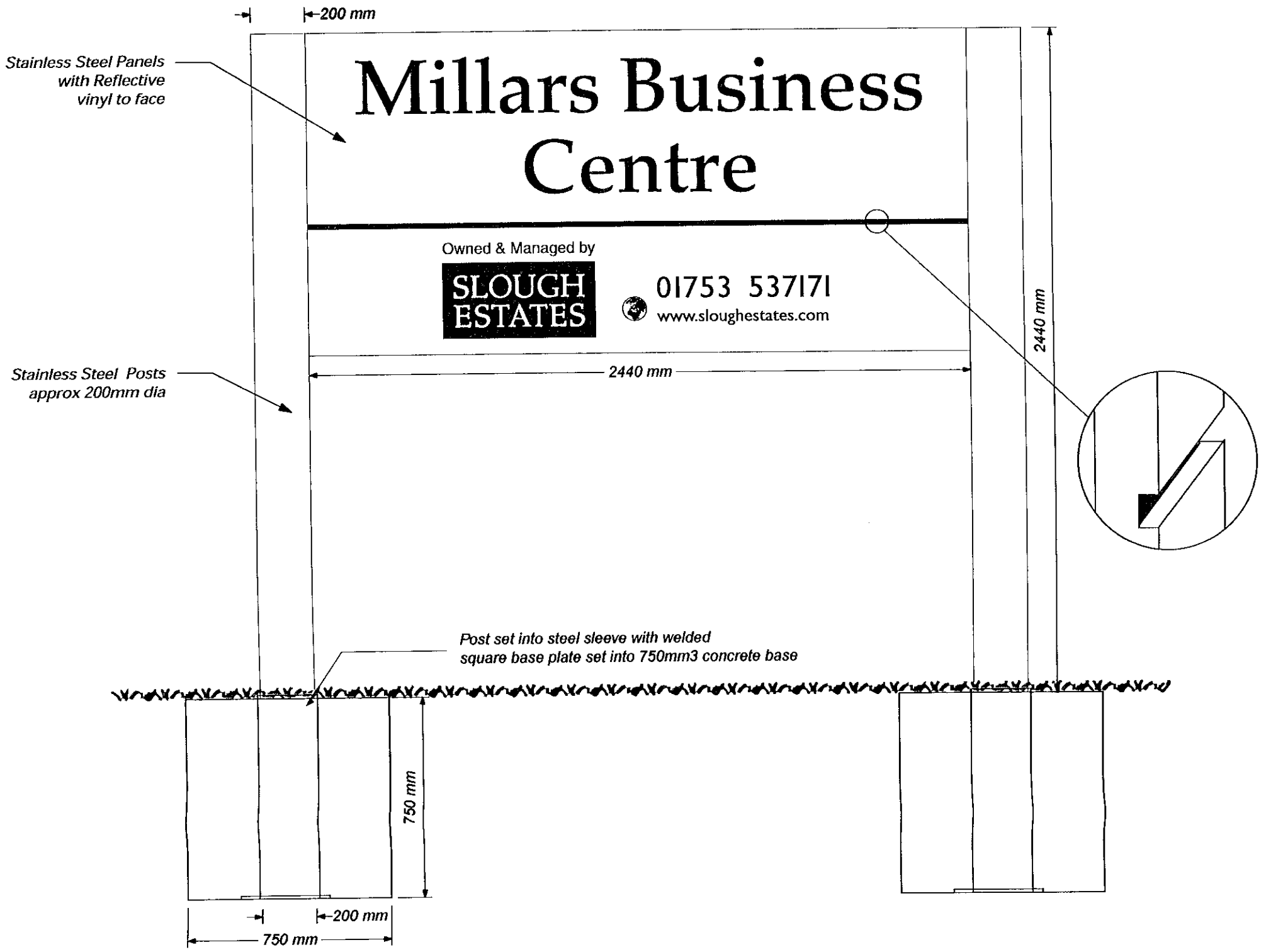

PLAN

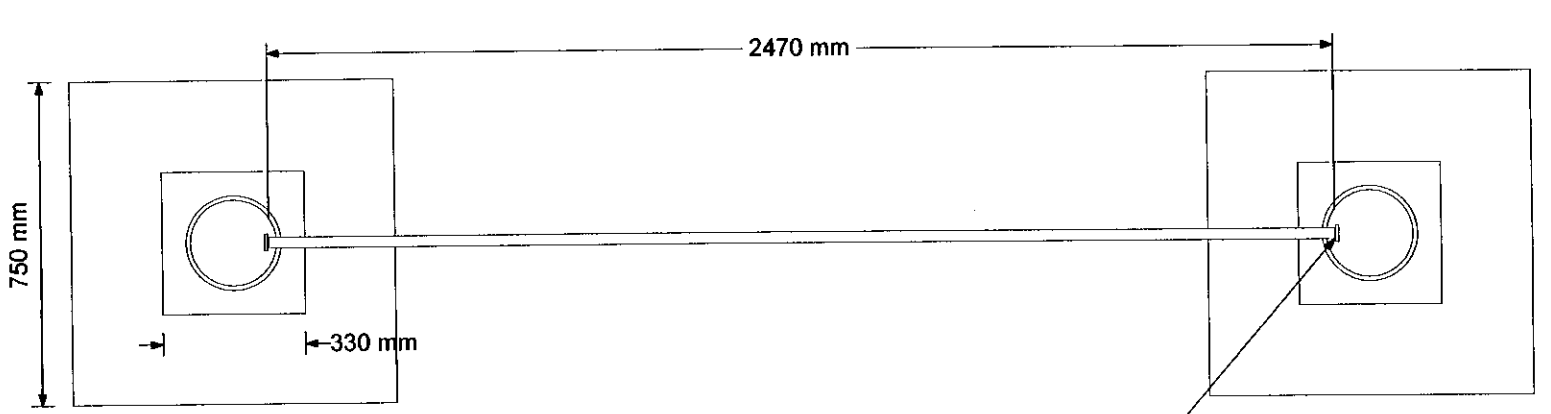

ADDITIONAL PLAN

3460

DWG	Slough Millar	SCALE 1:10
DATE	7/1/01	
Rev	1	
Drawn by	je	

Allsigns Limited T 020 8332 0741 F 020 8332 0742 ISDN 020 8940 1827
11 Sandycombe Road Richmond Surrey TW9 2ES www.allsignsgroup.com

APPROVED

Slough Estates, The Gateway

21.FEB.2001 * 3460



APPROVED

allsigns limited
T: 020 8332 0741 www.allsignsuk.com

Allsigns,
11 Sandycombe Road,
Richmond, Surrey,
TW9 2ES

SCALE	None
DATE	7th Nov 99
DRAWN BY	P.B
REVISION	1.0