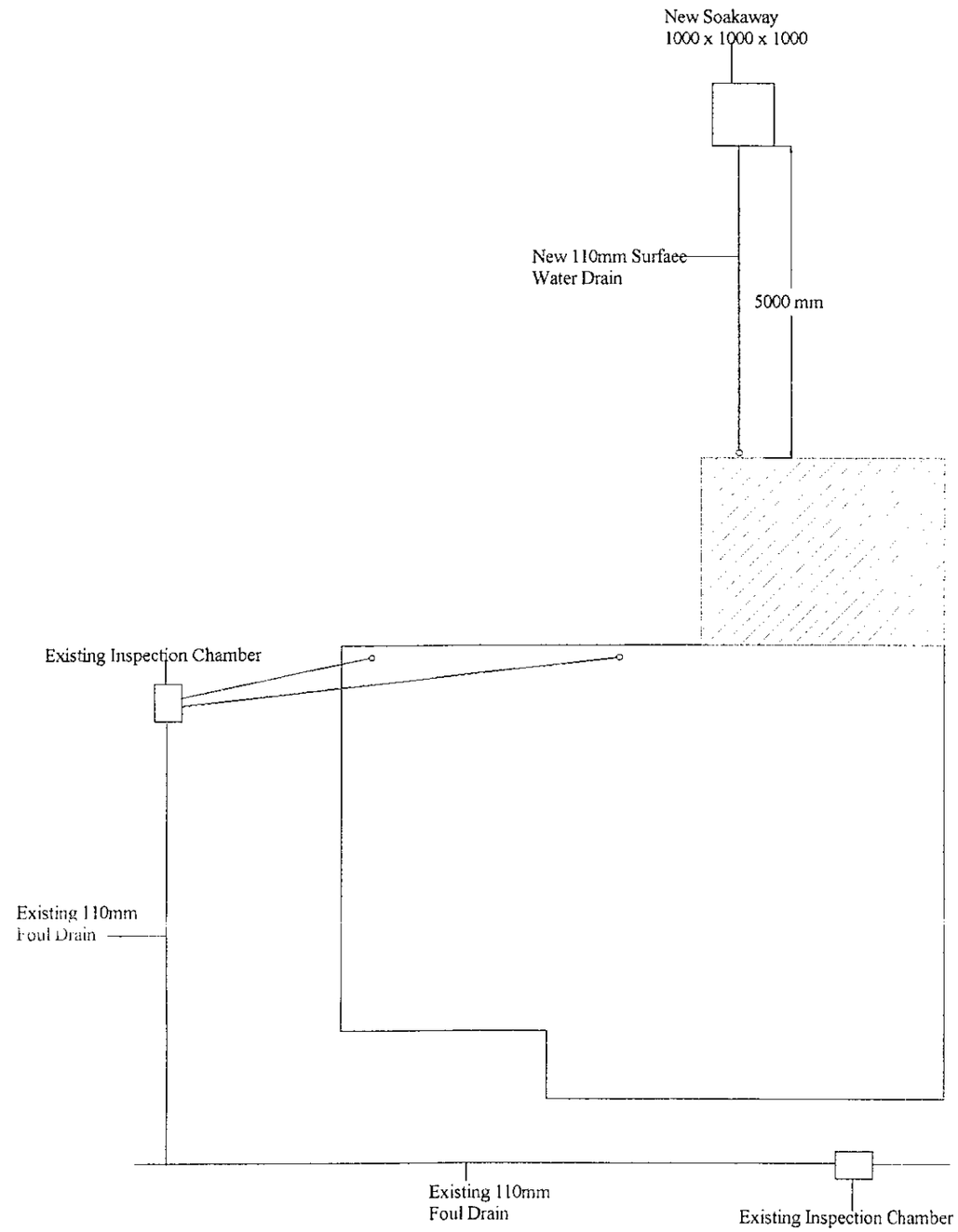

17. Surface Water Drainage: 110mm supersleeve pipes laid to a fall min 1:50. Soakaways 5000mm away from building, filled with 10mm to 150mm bricks or crushed rock. Concrete binding laid over fill.

18. Rainwater goods: 100mm UPVC half round gutter to 68mm round downpipes to surface water drains.

APPROVED

Drainage Layout

Proposed Extension to:
7 Gorse Ride South
Finchampstead
Wokingham
Berkshire
RG40 4EH

Drawing No. 5	Date: Jan 2001
Scale: 1:100	Drawn by: Joe Collett

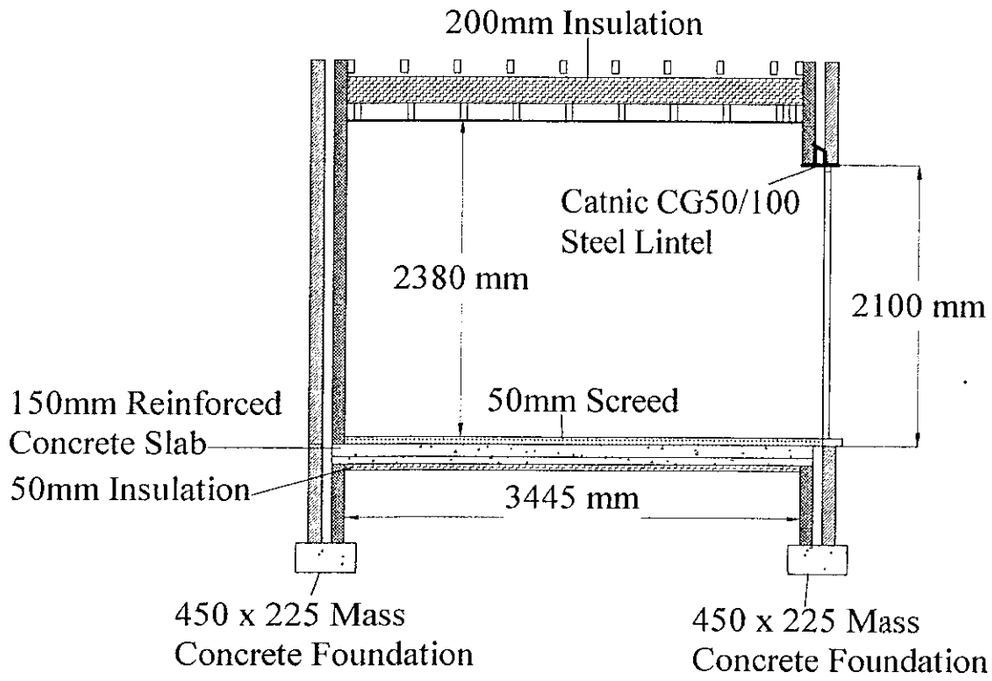

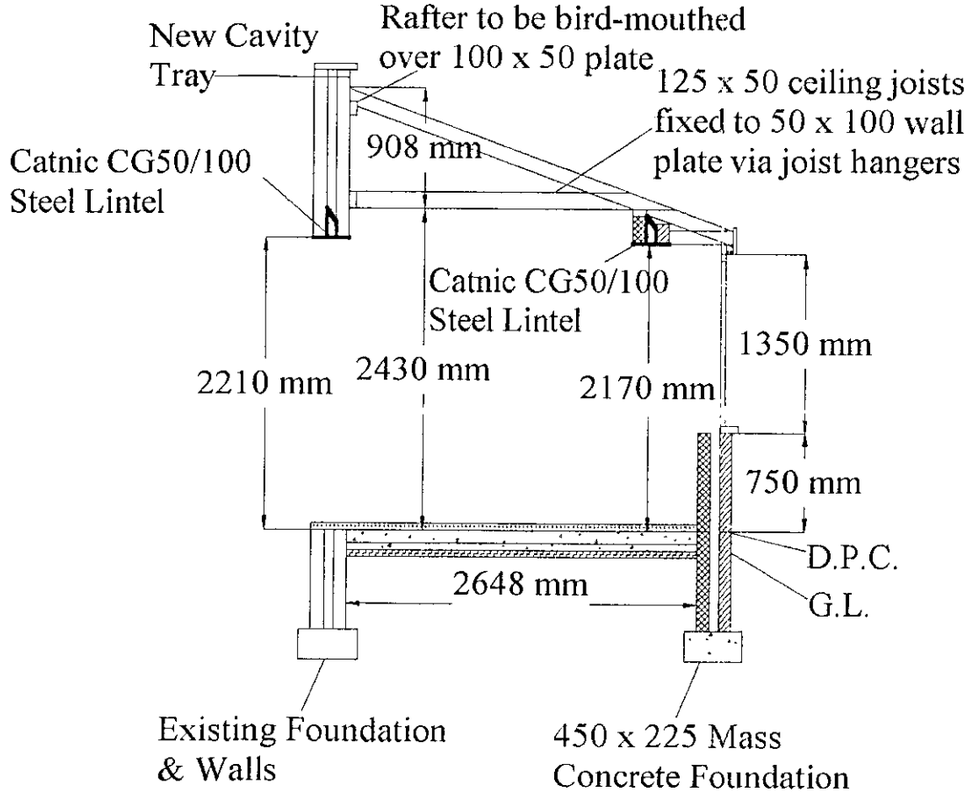

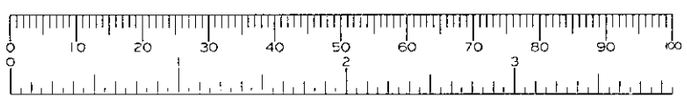

APPROVED

Cross Sections

Proposed Extension to:
7 Gorse Ride South
Finchampstead
Wokingham
Berkshire
RG40 4EH

Drawing No. 4	Date: Jan 2001
Scale:1:50	Drawn by: Joe Collett



Front

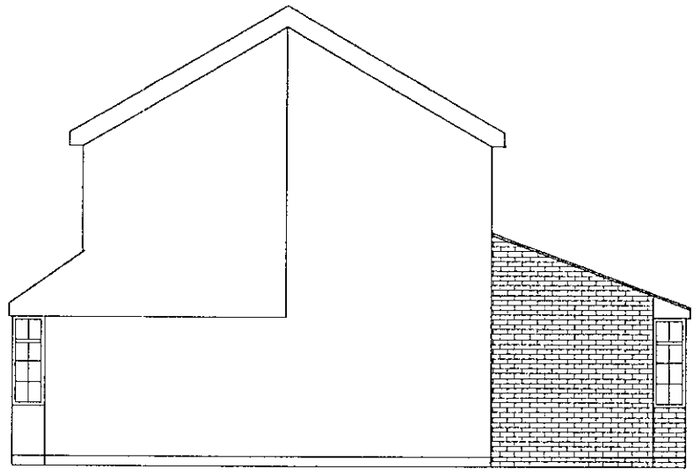

Side

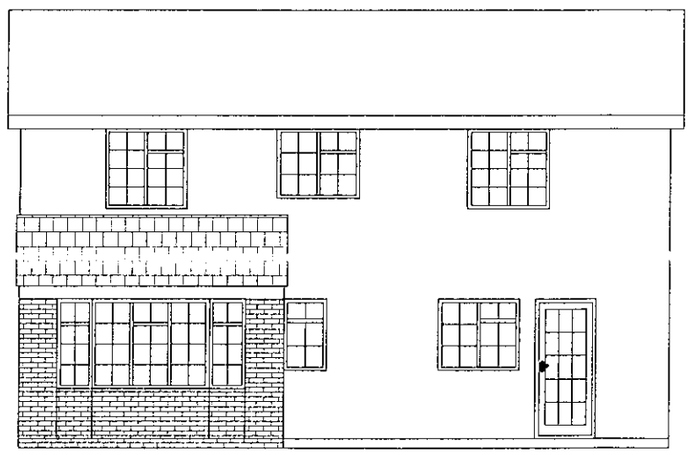

Back

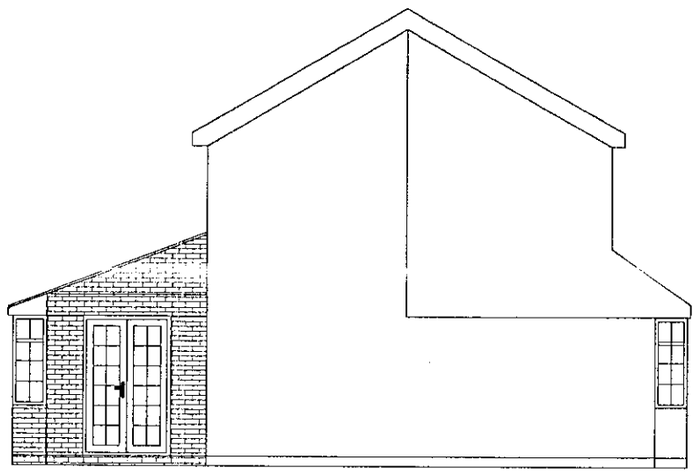

Side

APPROVED

Elevations

Proposed Extension to:
7 Gorse Ride South
Finchampstead
Wokingham
Berkshire
RG40 4EH

Drawing No. 3	Date: Jan 2001
Scale: 1:100	Drawn by: Joe Collett

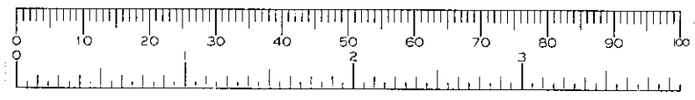

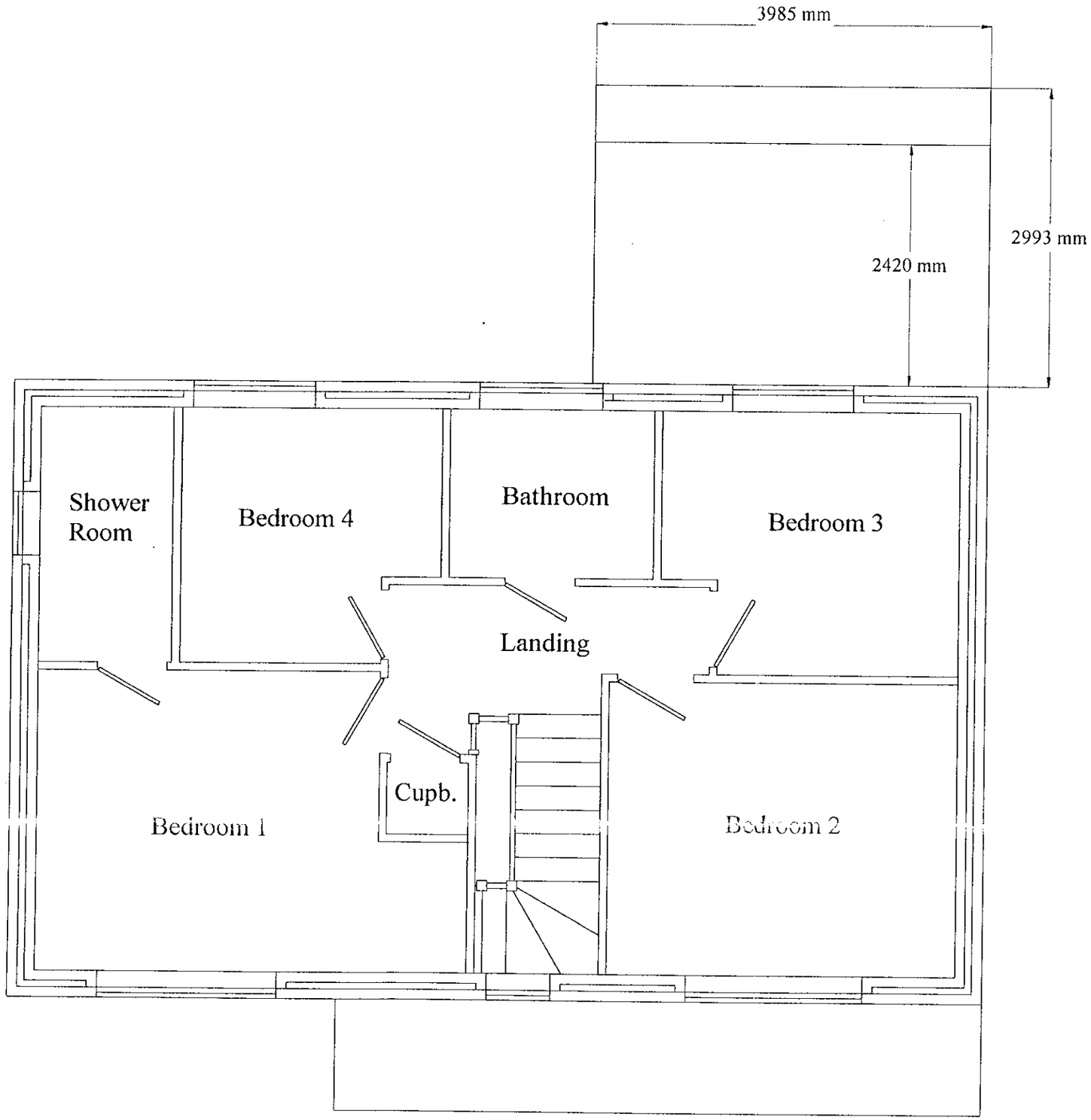

10. Insert Catnic CG50/100 steel lintels and increase existing Sitting room opening 3200 wide. Plaster reveals.

11. Doors & windows UPVC double glazed with safety glazing to BS6206 & including 8000mm background trickle ventilator.

12. Oversite & Floor 25mm blinding sand, 50mm Jablite insulation, 1000 gauge polythene DPM tied to DPC . 150mm insitu concrete slab incorporating B785 high yeild steel mesh, 50mm from bottom. 25mm cement sand screed.

13. Roof Coverings to match existing. Redland Stonewold concrete without nail hole inter locking tiles. max 318 gauge, on 38 x 22 s & t softwood battens on felt underlay to BS747. Code 4 lead flashing to abutment. Cement mortar pointing to verges.

14. Roof construction: 20 degree pitch. 50 x 100 s & t softwood plates with holding down straps. 50 x 100 s & t sotwood SC4 rafters at 400 c/c. 50 x 100 s & t softwood plates bolted to wall. 50 x 125 s & t SC3 softwood ceiling joists at 400 c/c. UPVC fascias and soffitts.

15. 12.5mm plasterboard and Artex finish ceiling 200mm fibre glass quilt insulation.

16. 10mm continuous over fascia ventilator with rafter tray. Redland thru vent tiles at abutment to provide 5mm continuous ventilation.

APPROVED

First Floor Plan

Proposed Extension to:
7 Gorse Ride South
Finchampstead
Wokingham
Berkshire
RG40 4EH

Drawing No. 2	Date: Jan 2001
Scale:1:50	Drawn by: Joe Collett

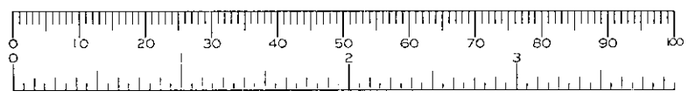

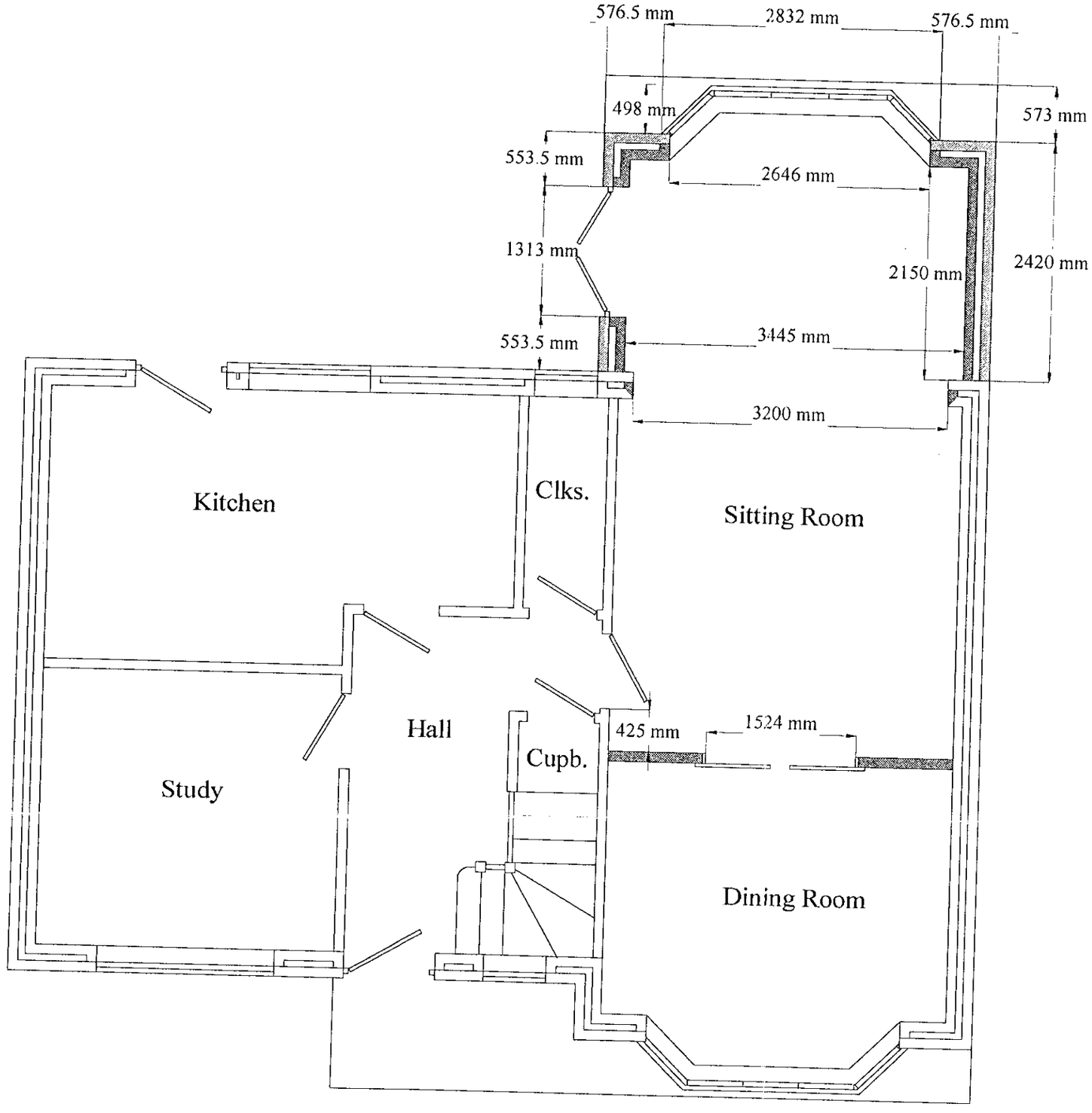

1. Foundations to walls to be 450 x 225 mass concrete strip foundation, laid at a depth to suit subsoil, ground shape, bearing and conditions. 400 x 225 mass concrete foundation to internal walls.

2. Walls below DPC to be 100mm concrete blockwork 65mm cavity filled with lean mix concrete to ground level 65mm prestressed concrete lintels over drains. 105mm face brickwork above ground level.

3. DPC to be hyload pitch polymer and contiguous with DPM.

4. Walls to be 267mm cavity construction. 102mm face brick to match existing house, 65mm cavity, 100mm Thermalite shield blocks. Rendered and set internally. 50mm Dritherm full fill cavity batts insulation.

5. Wall ties to be stainless steel butterfly at 900 c/c horizontally and 450 c/c vertically and at each block course at reveals.

6. DPC to reveals to be 150mm hyload pitch polymer.

7. Thermabate cavity closer at top of walls.

8. Internal Walls to be 100mm Thermalite shield blocks as indicated. Rendered and plaster finish.

9. Catnic CN50/100 open backed steel lintels to window and door openings. Minimum 150mm bearing.

APPROVED

Ground Floor Plan

Proposed Extension to:
7 Gorse Ride South
Finchampstead
Wokingham
Berkshire
RG40 4EH

Drawing No. 1	Date: Jan 2001
Scale:1:50	Drawn by: Joe Collett

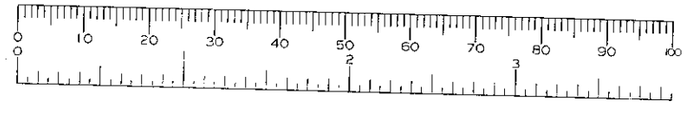

15/5/01