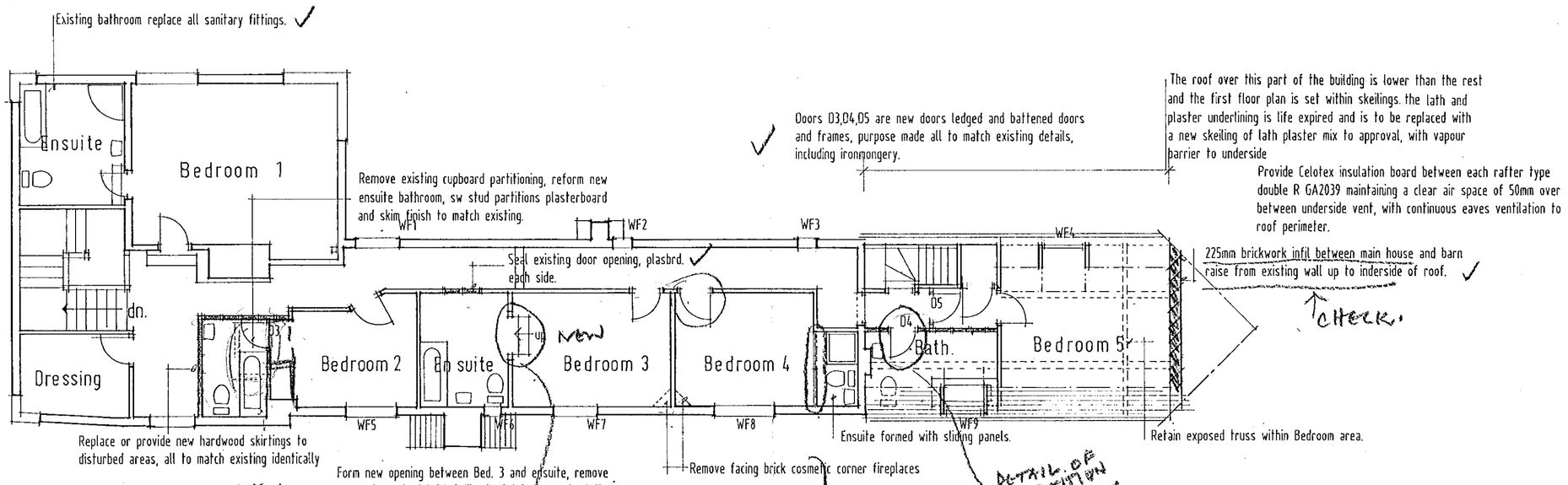

First Floor Plan

RE ROOFING

All existing areas of the roof covering the main house are to be refurbished strip and set aside existing clay plain tiles and all fittings, bonnets ridges etc replace all damaged tiles with good quality second hand tiles to match existing Recover on tiling battens and untearable underlay felt. Roof voids are to be ventilated to a detail to be agreed. Replace all defective flashing valleys with code 5 lead

All other existing windows to be retained, locally repaired as necessary, the existng Crittall windows are not tobe replaced.

All existing cast iron plumbing to be retained any new downpipes are to match existing.

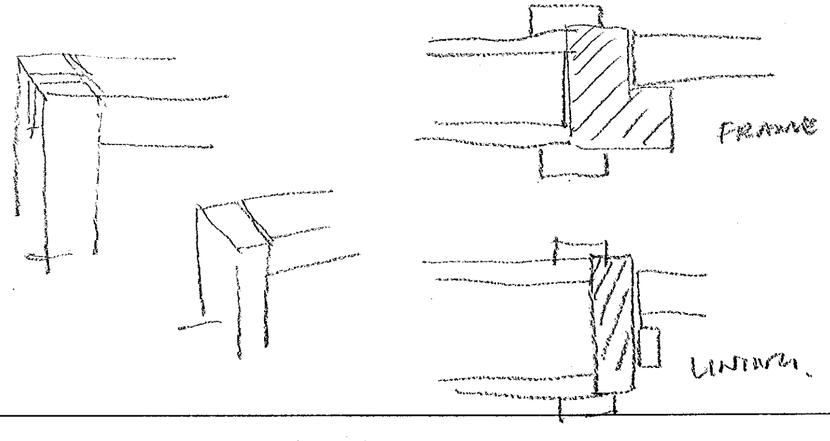

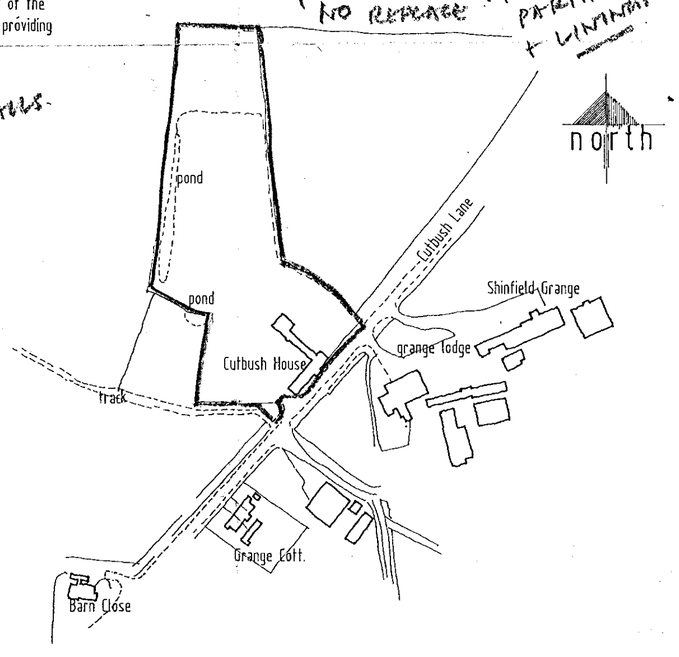

Location Plan
Scale: 1:2500

NEW WINDOWS

Windows WF1 to WF 9 are to be fully replaced, purpose made to suit existing openings. oak frames and opening casements with double glazed lead lights all to match existing proportions. Provide night trickle ventilation to frame head, 8000mm² free area.

RAINWATER GOODS

The rainwater water goods throughout aare of a very specialist nature, and are formed in oak sections with lead lining. The gutters are generally in good order and will require some repair only to the intetnal lead lining. The downpipes are in poor repair, the square oak box section may need to be wholly replaced in some areas, and shall be done so fully to match existing details. A 65mm pvc downpipe is to be provided concealed within the box downpipe, discharged to new surface water drains.

3 JAN 2001 * 3272

Project:
Proposed alterations and refurbishment works.

Site:
Cutbush House
Cutbush Lane · Shinfield · Reading.

REFUSED

Client:
Mr. A. Sibley

Scale: 1·100

Date: January 2001

Drawing no. 21/02

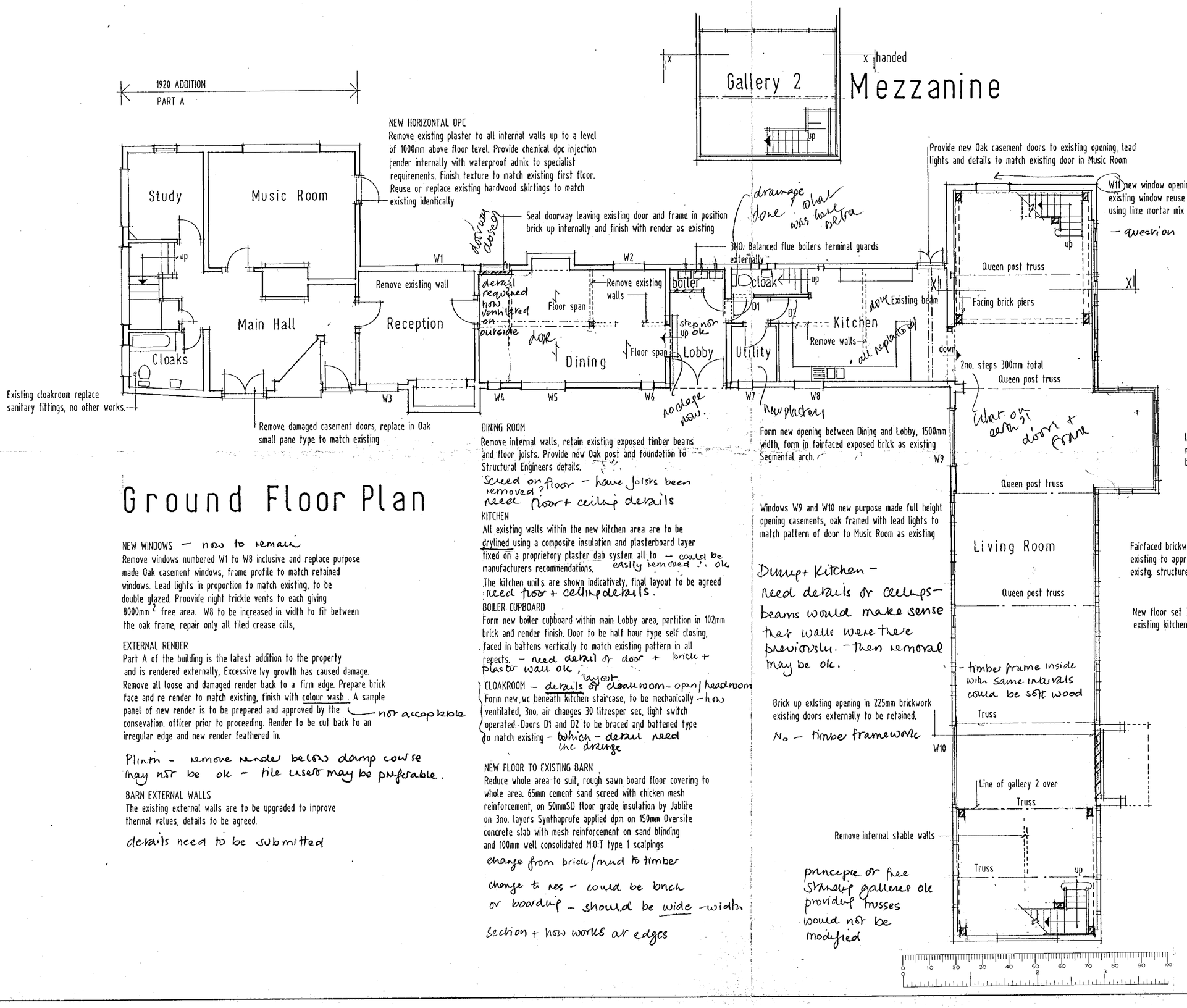

Ground Floor Plan

NEW WINDOWS - now to remain
Remove windows numbered W1 to W8 inclusive and replace purpose made Oak casement windows, frame profile to match retained windows. Lead lights in proportion to match existing, to be double glazed. Proovide night trickle vents to each giving 8000mm^2 free area. W8 to be increased in width to fit between the oak frame, repair only all tiled crease cills,

EXTERNAL RENDER
Part A of the building is the latest addition to the property and is rendered externally, Excessive Ivy growth has caused damage. Remove all loose and damaged render back to a firm edge. Prepare brick face and re render to match existing, finish with colour wash . A sample panel of new render is to be prepared and approved by the consevation. officer prior to proceeding. Render to be cut back to an irregular edge and new render feathered in.
- not acceptable

Plinth - remove render below damp course may not be ok - tile user may be preferable.

BARN EXTERNAL WALLS
The existing external walls are to be upgraded to inprove thermal values, details to be agreed.

details need to be submitted

Section X·X

31.JAN.2001* 3272

Project:
Proposed alterations and refurbishment works at:

Site:
Cutbush House
Cutbush Lane · Shinfield · Reading.

REFUSED

Client:
Mr. A. Sibley

Scale: 1·100

Date: January 2001

Drawing no. 21/01

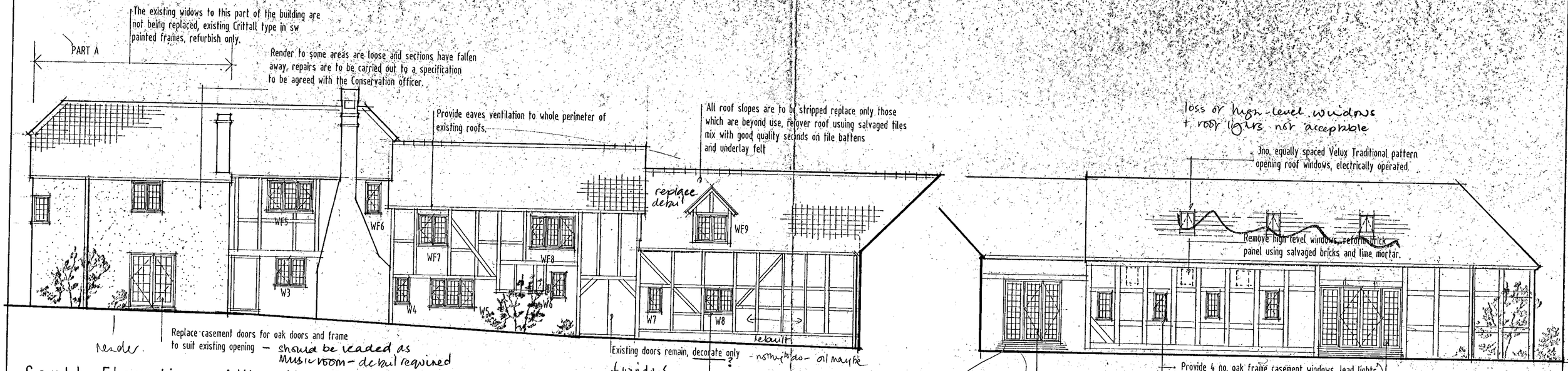

NOTE – not now
Replace all windows other than part A of the building, with purpose made windows to suit size of existing openings oak casements with double glazed lead lights. Retain tile cill creasing repair to existing details if necessary.

done!
principle ok but need detail of window in relation to frame

need for build up of doors? – see internal floor level

double doors + high level square window in each which appears to be same

may be ok – detail ✕ of doors

design of doors? detail probably not timber glazing bars – planks/glass – or leaded – arts + crafts approach

double doors which + height not to change

All windows to Cutbush Lane elevation to be non opening

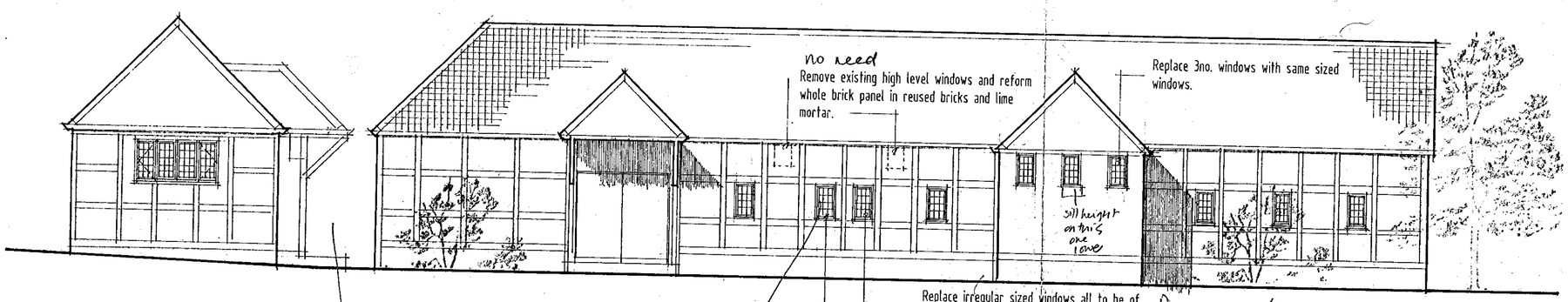

next part hidden would be seen behind has window in each side

damaged windows should be repaired

31 JAN 2001 * 3272

project:
Proposed alterations and refurbishment works at:
site:
Cutbush House
Cutbush Lane, Shinfield. Reading.

REFUSED

client:
Mr. A. Sibley

scale: 1:100
date: Jan. 2001
drawing no. 21/03

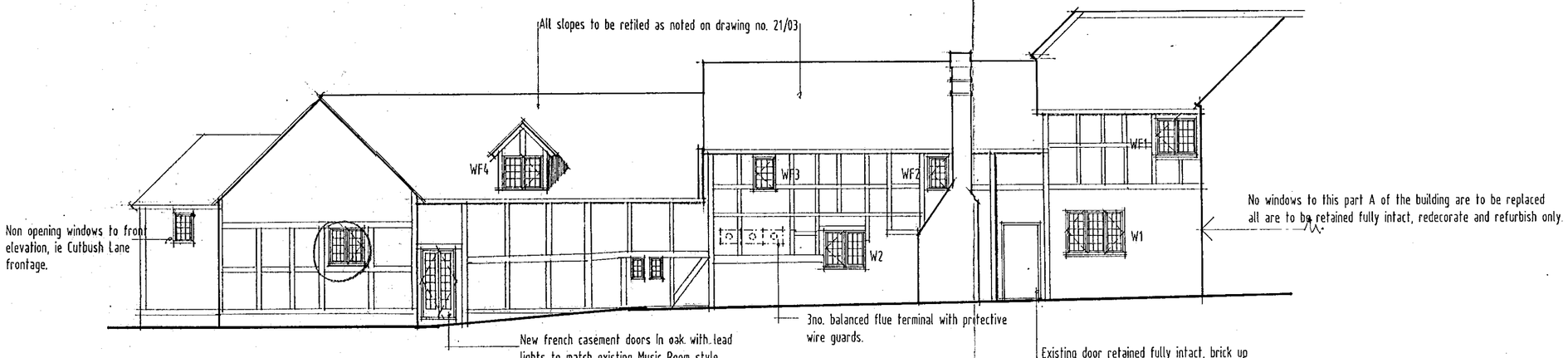

North Elevation [View from rear garden]

31 JAN 2001 * 3272

project:
Proposed refurbishment works
site:
Cutbush House
Cutbush Lane · Shinfield
Reading.

REFUSED

client:
Mr. A. Sibley

scale: 1·100
date: Jan. 2001
drawing no: 21/04

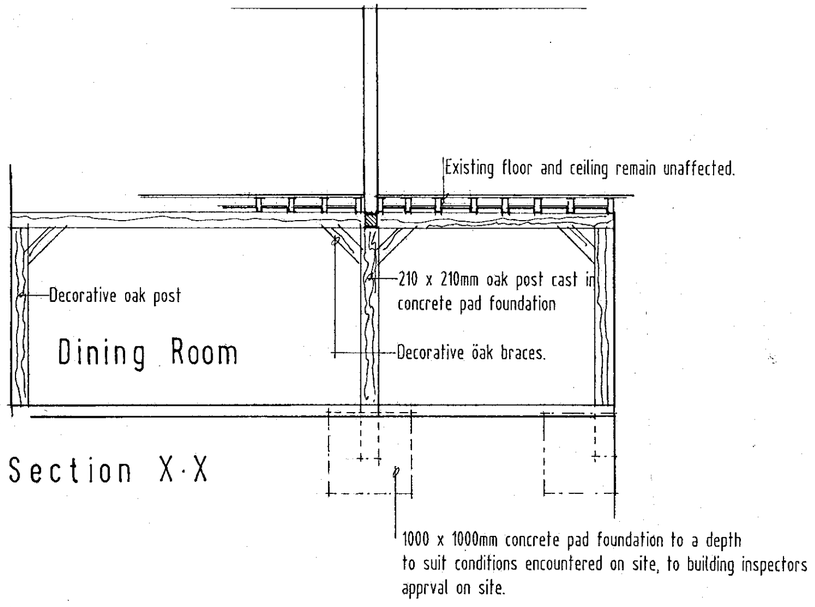

Section X·X

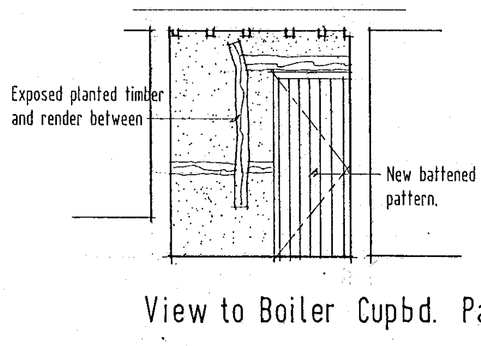

View to Boiler Cupbd. Partition

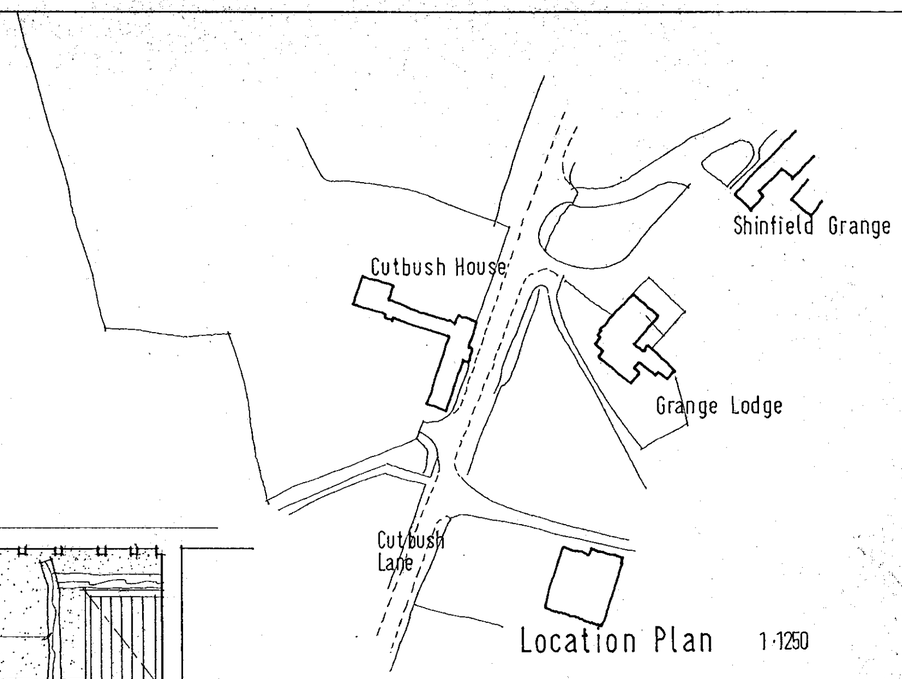

Location Plan 1·1250

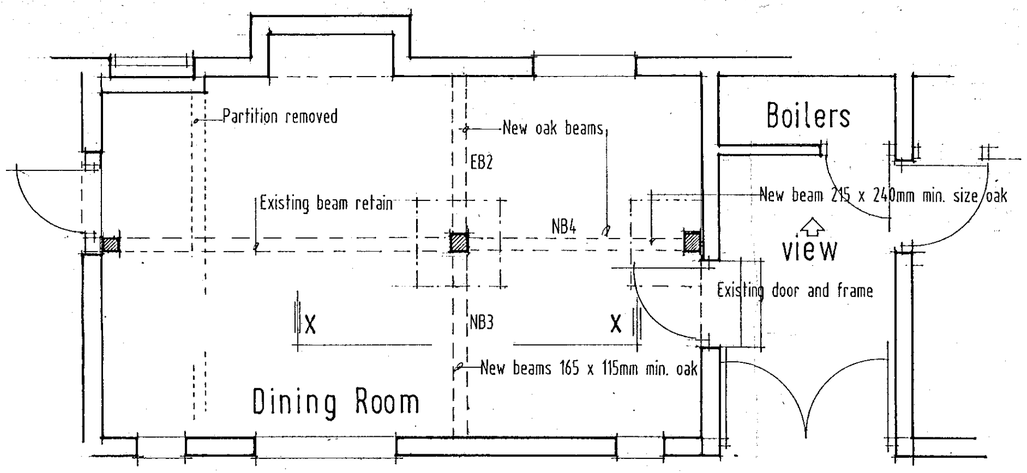

Ground Floor Plan

Project:
Proposed alterations & refurbishment works at.

Site:
Cutbush House
Cutbush Lane · Shinfield.
Reading.

REFUSED

Client:
Mr. A. Sibley

Scale:
1·50

Date:
Feb. 2001

Drawing no.
21/06