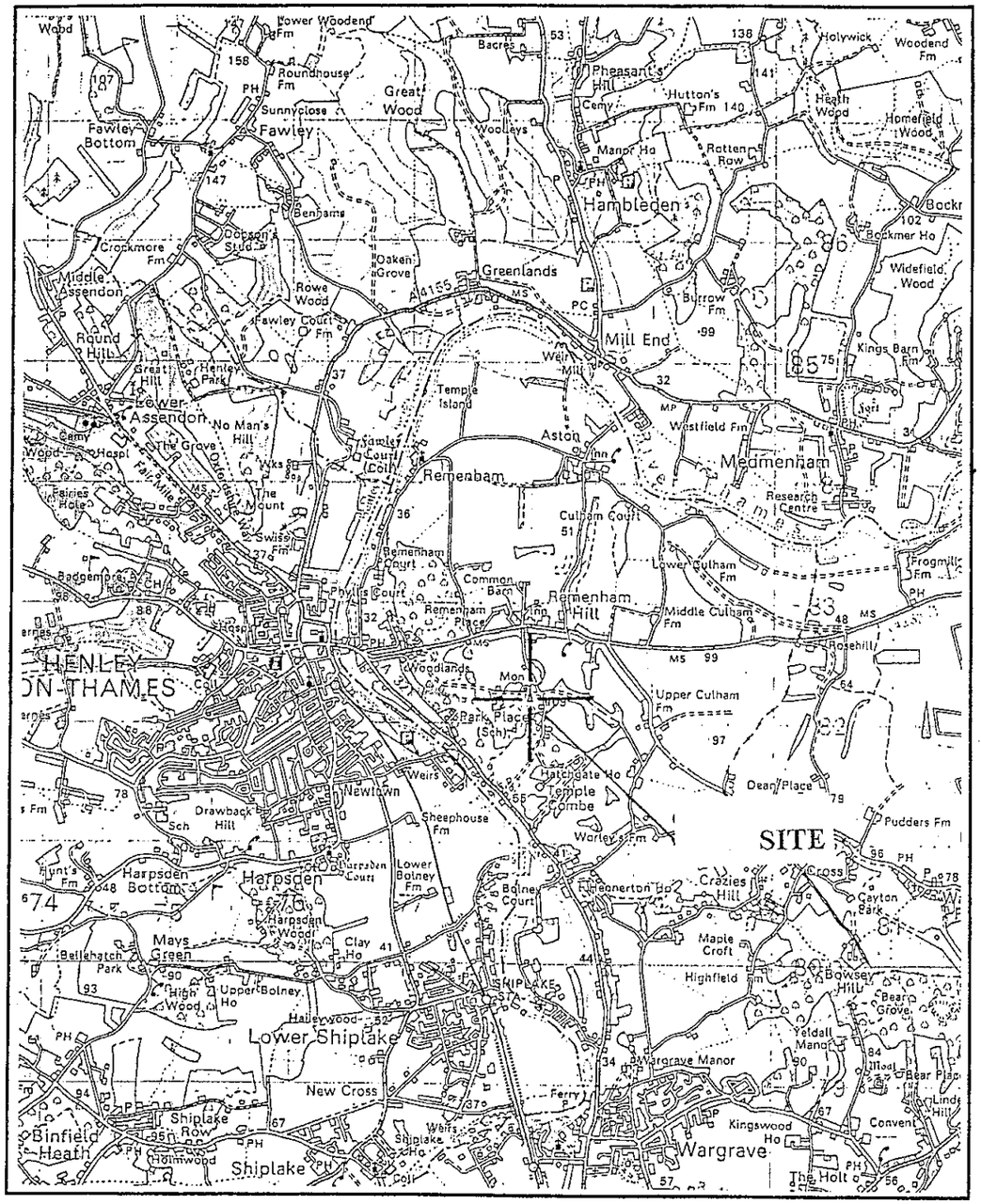

AREA MAP

REPRODUCED FROM OS SHEET NO.151 1984 1:50,000
WITH THE PERMISSION OF THE CONTROLLER, H.M.S.O. © CROWN COPYRIGHT.
CROWN CASTLE INTERNATIONAL LTD. LICENCE NO. AL 52065A0001.

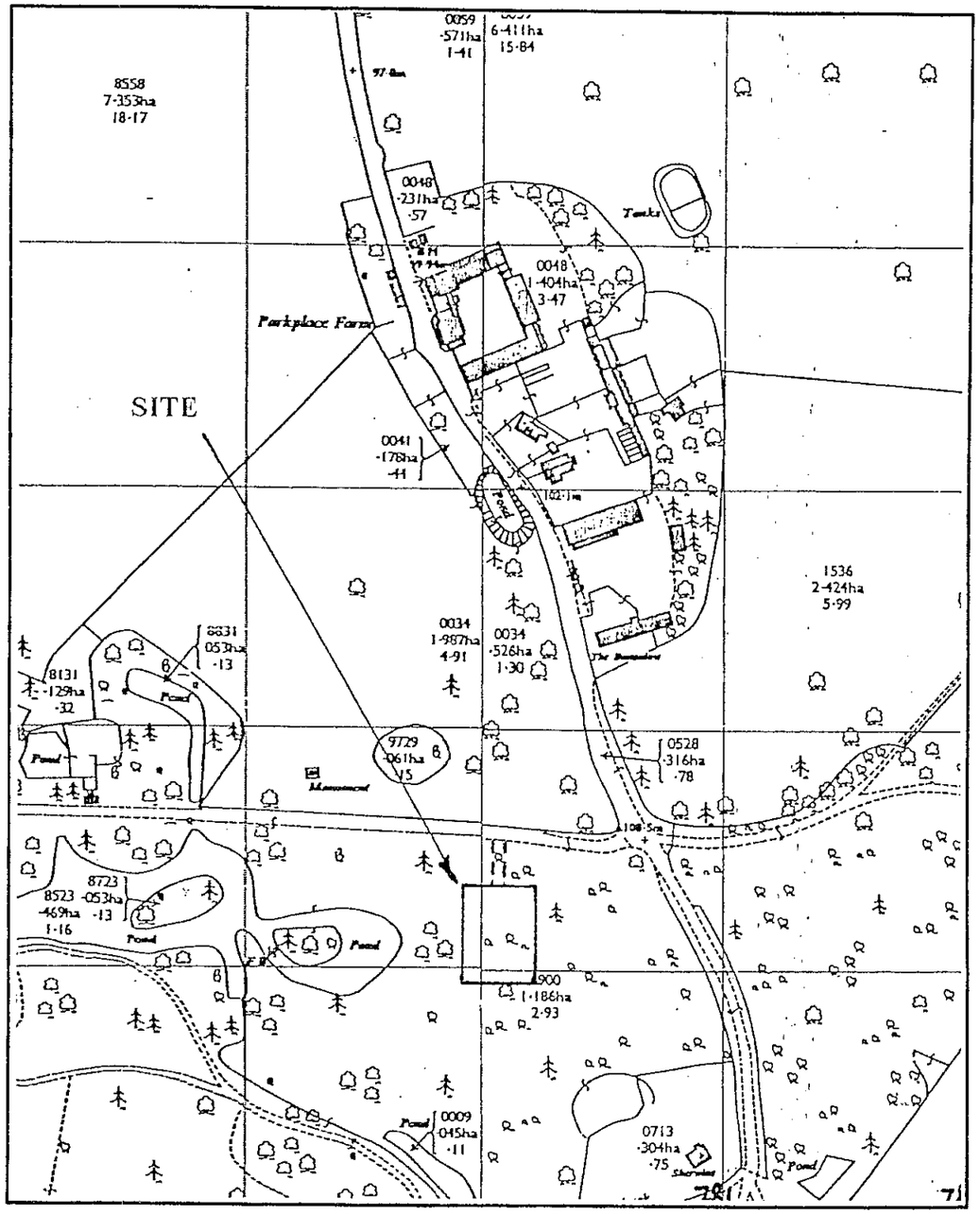

SITE MAP

REPRODUCED FROM OS SHEET NO.06963.1999. 1:2500
WITH THE PERMISSION OF THE CONTROLLER, H.M.S.O. © CROWN COPYRIGHT.
CROWN CASTLE INTERNATIONAL LTD. LICENCE NO. AL 52065A0001.

0 10 20 30 40 50 60 70 80 90 100
1 2 3

CROWN CASTLE INTERNATIONAL

NOTES

1) DO NOT SCALE DIMENSIONS

2) ALL DIMENSIONS IN MILLIMETRES UNLESS OTHERWISE STATED

Iss	Revision	Date	Drn	App
3	Revised by C. Kendrick (1362/00) New surround.	26.01.00	HLJ	CK
2	Orig. Eng. C. Mann (1514/98) Initial issue.	21.01.98	RWB	CM

© This drawing is the property of CROWN CASTLE UK LIMITED and may not be reproduced or disclosed to a third party in any form without written permission

Crown Castle International
PO Box 98
Warwick
CV34 6TN
TEL: 01926 416000 FAX: 01926 416600

HENLEY ON THAMES

AREA & SITE LOCATION MAPS

NGR: SU 7800 8220

Scale: As shown Date: 21.10.1998
Drn: RWB App: CM

Drg No 14479.2.04/3

A3



vodafone project pegasus

CELL No:	0085
SITE NAME	HENLEY-ON-THAMES
SITE ADDRESS	REMENHAM HILL REMENHAM HENLEY-ON-THAMES OXFORDSHIRE
NGR	SU 7100 7620
APPLICATION No:	TBA
STATUS	PROPOSED

ANTENNA DETAILS:

ITEM	TYPE	CELL	BEARING	HT (BASE)
A	DUAL POLAR	1	90°	25m
B	DUAL POLAR	2	210°	25m
C	DUAL POLAR	3	330°	25m
FEEDER LENGTH	TBA			

ALL BEARINGS MEASURED EAST OF GRID NORTH

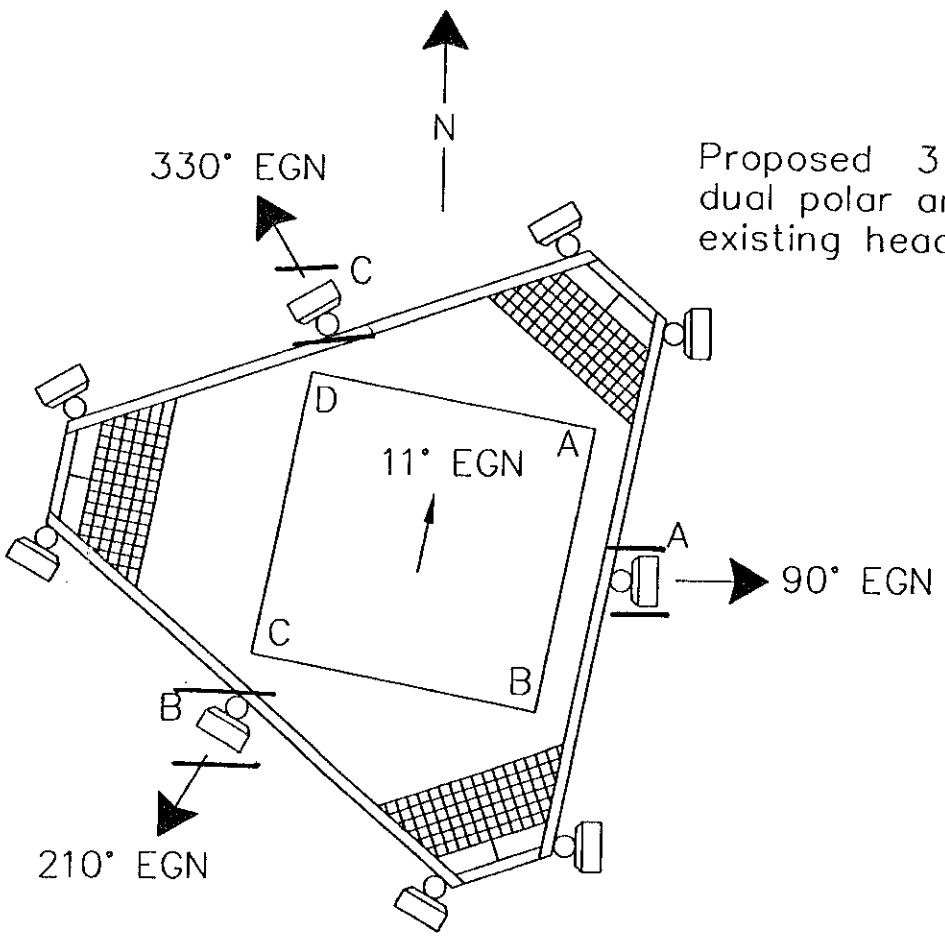

Proposed Vodafone antenna mounting concept @ 25m (NTS)

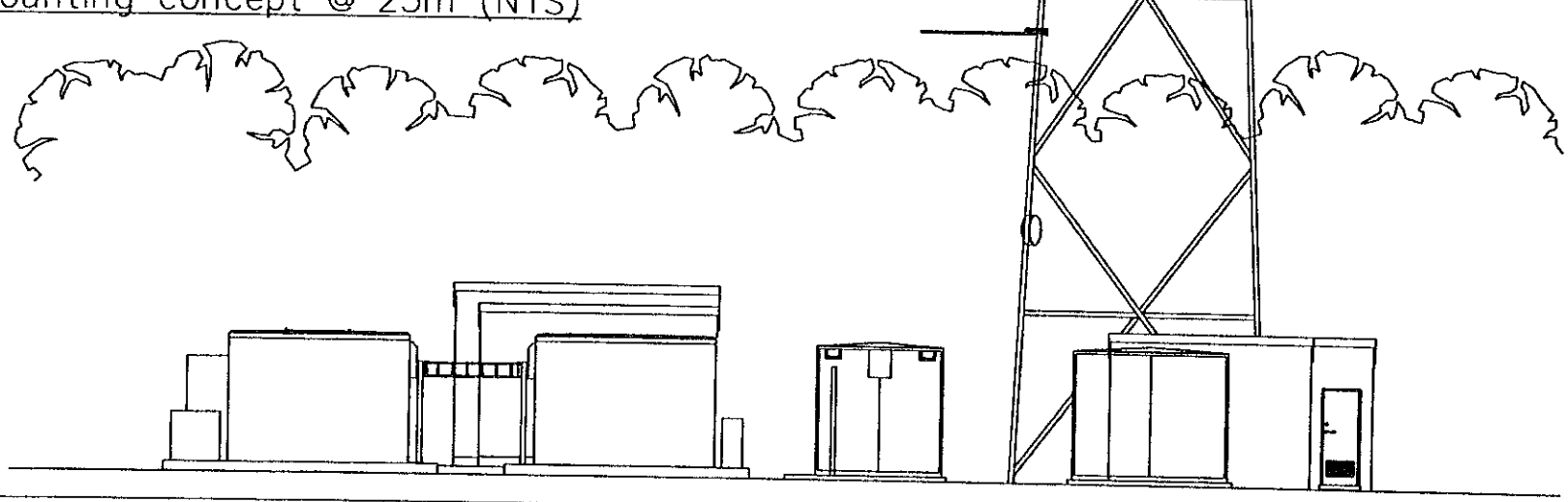

Proposed 3 off Vodafone dual polar antennas on existing headframe

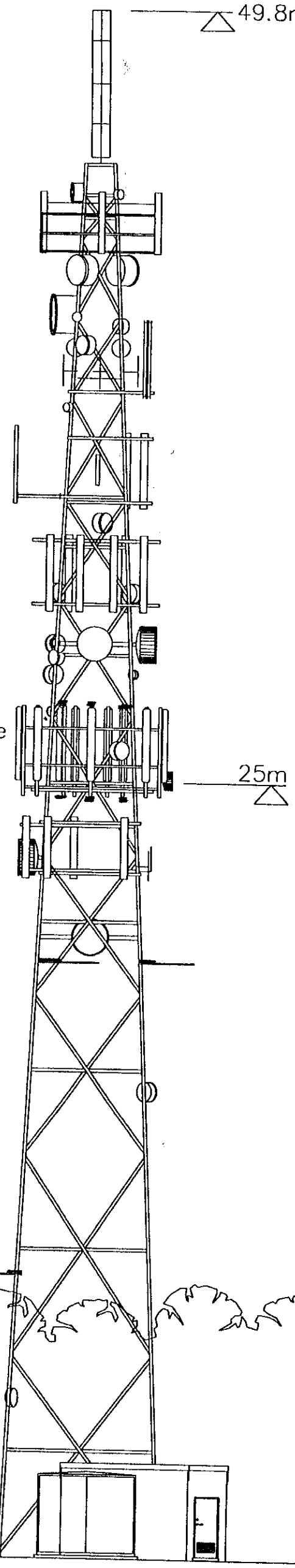

NOTES

1) DO NOT SCALE DIMENSIONS
2) ALL DIMENSIONS IN MILLIMETRES UNLESS OTHERWISE STATED

CROWN CASTLE INTERNATIONAL

Iss	Revision	Date	Drn	App
2	3G antenna added Rev. Eng. P. Jones	7.7.00	TPM	PJ
2	New border added & dish added Job No. 1305/00	28.01.00	AS	TJ
1	FIRST ISSUE Job No. 1344/99	15.2.99	BW	MT

© This drawing is the property of CROWN CASTLE UK LIMITED and may not be reproduced or disclosed to a third party in any form without written permission.

Crown Castle International
PO Box 98
Warwick
CV34 6TN
TEL: 01926 416000 FAX: 01926 416800

VODAFONE INSTALLATION
NORTH ELEVATION

HENLEY-ON-THAMES

NGR: SU 7100 7620

Scale: 1:200 Date: 15.02.99
Drn: BAW App: MT

Drg No 14479.2.15/3

A1

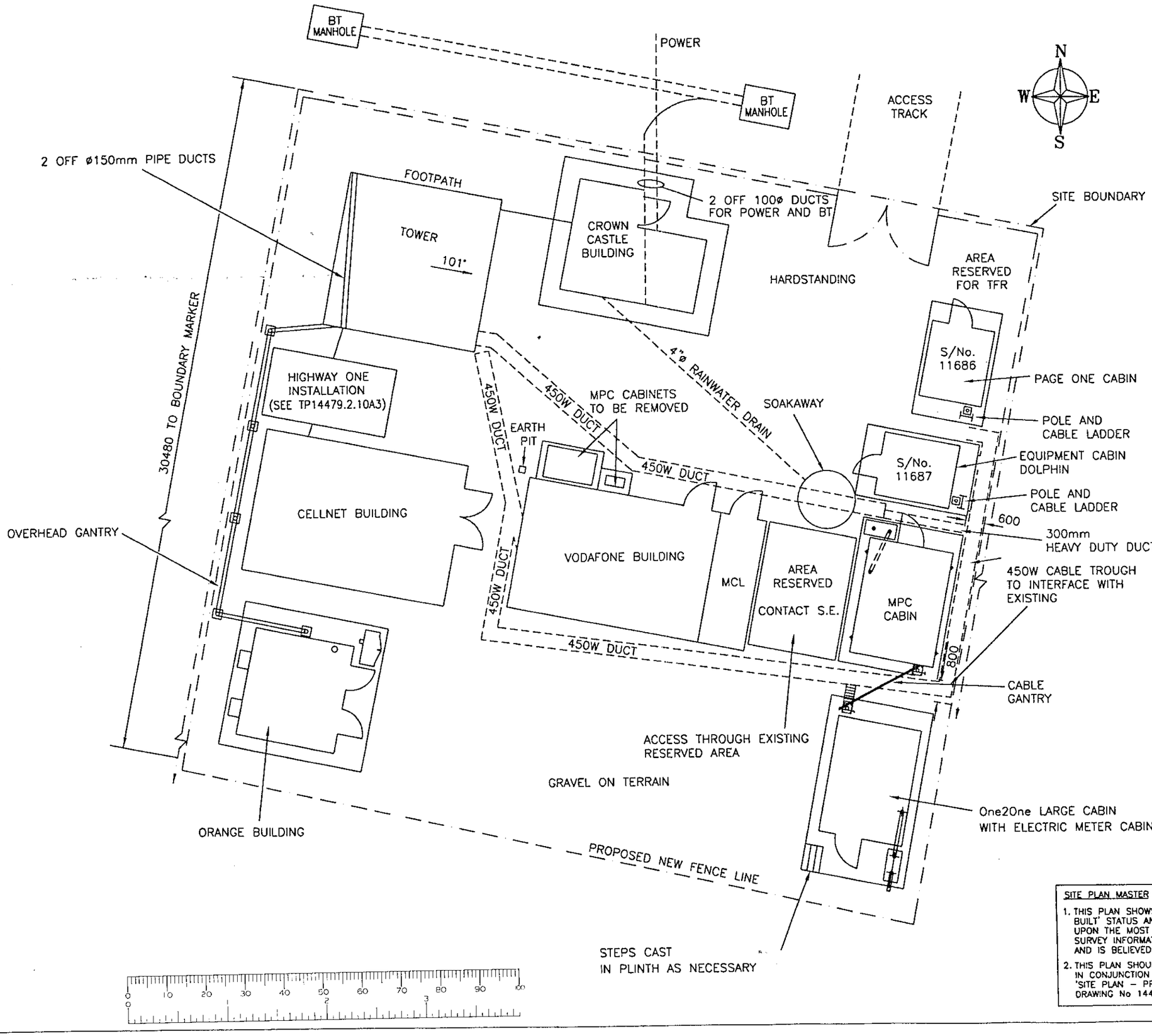

CROWN CASTLE INTERNATIONAL

NOTES

1) DO NOT SCALE DIMENSIONS

2) ALL DIMENSIONS IN MILLIMETRES UNLESS OTHERWISE STATED

SITE PLAN MASTER

1. THIS PLAN SHOWS THE 'AS BUILT' STATUS AND IS BASED UPON THE MOST CURRENT SURVEY INFORMATION AVAILABLE AND IS BELIEVED TO BE CORRECT.
2. THIS PLAN SHOULD BE READ IN CONJUNCTION WITH THE 'SITE PLAN – PROPOSED' DRAWING No 14479.2.001.

Iss	Revision	Date	Drn	App
1	AS-BUILT Job ref:2858/00	20.6.00	BAA	PR

© This drawing is the property of CROWN CASTLE UK LIMITED and may not be reproduced or disclosed to a third party in any form without written permission

Crown Castle International
PO Box 98
Warwick
CV34 6TN
TEL: 01926 416000 FAX: 01926 416600

HENLEY-ON-THAMES

SITE PLAN
MASTER

NGR: SU 7800 8220

Scale: 1:125 Date: 20.6.00
Drn: BAA App: PR

Drg No 14479.2.000/1

A

Fri Jul 07 10:20:46 2000 (TPM) UNCONTROLLED COPY

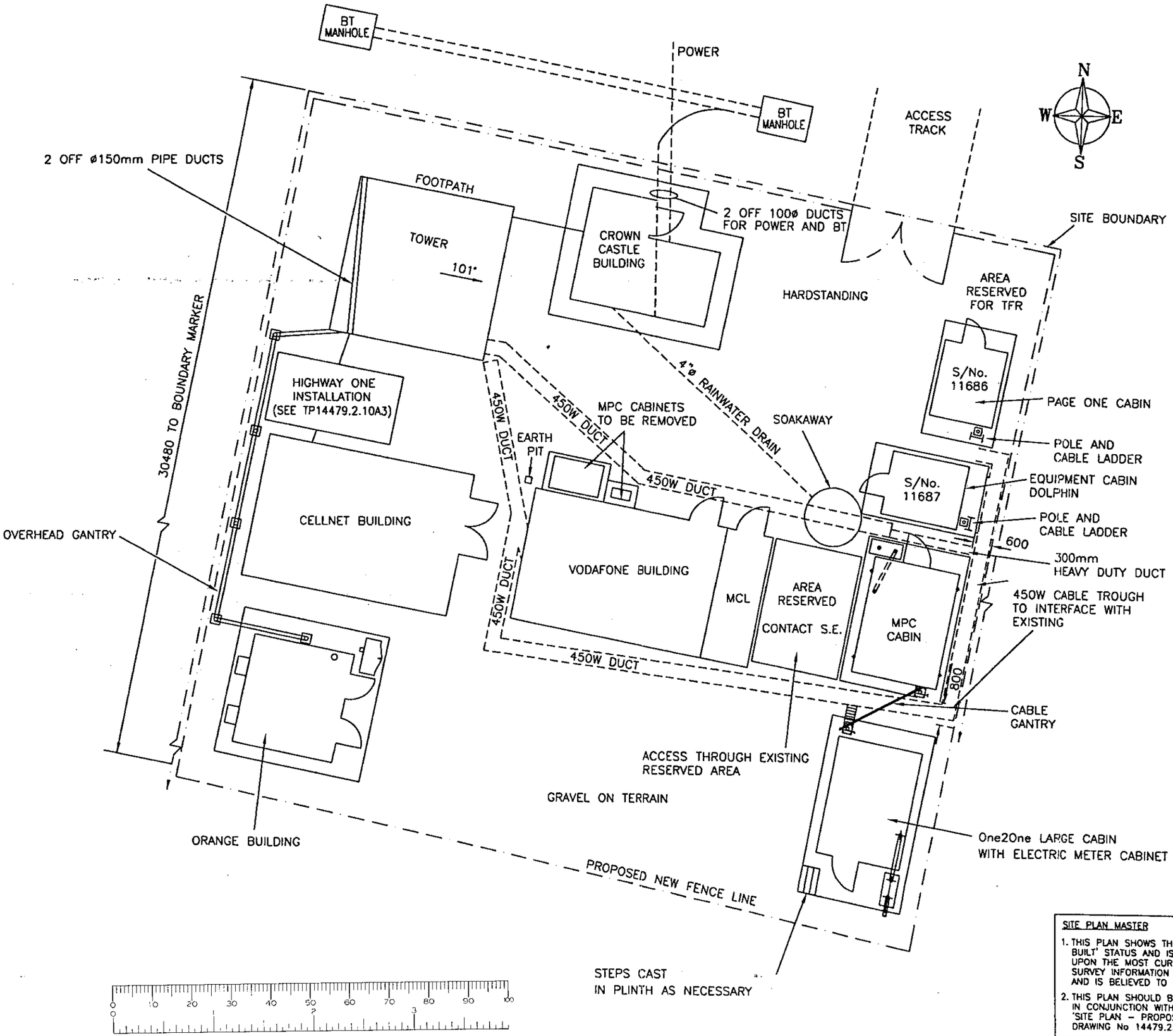

SITE PLAN MASTER

1. THIS PLAN SHOWS THE 'AS BUILT' STATUS AND IS BASED UPON THE MOST CURRENT SURVEY INFORMATION AVAILABLE AND IS BELIEVED TO BE CORRECT.
2. THIS PLAN SHOULD BE READ IN CONJUNCTION WITH THE 'SITE PLAN – PROPOSED' DRAWING No 14479.2.001.

CROWN CASTLE INTERNATIONAL

NOTES

1) DO NOT SCALE DIMENSIONS
2) ALL DIMENSIONS IN MILLIMETRES UNLESS OTHERWISE STATED

Iss	Revision	Date	Drn
1	AS-BUILT Job ref:2858/00	20.6.00	BAA

© This drawing is the property of CROWN CASTLE UK LIMITED and may not be reproduced or disclosed to a third party in any form without written permission

Crown Castle International
PO Box 98
Warwick
CV34 6TN
TEL: 01926 416000 FAX: 01926 416800

HENLEY-ON-THAMES

SITE PLAN
MASTER

NGR: SU 7800 8220

Scale: 1:125 Date: 20.6.00
Drn: BAA App: PR

Drg No 14479.2.000/1

Fri Jul 07 10:20:46 2000 (TPM) UNCONTROLLED COPY

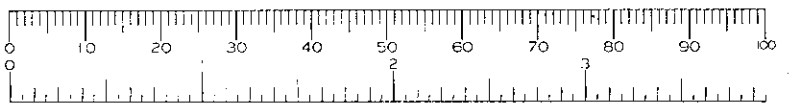

vodafone project pegasus

CELL No:	0085
SITE NAME	HENLEY-ON-THAMES
SITE ADDRESS	REMENHAM HILL REMENHAM HENLEY-ON-THAMES OXFORDSHIRE
NGR	SU 7100 7620
APPLICATION No:	TBA
STATUS	PROPOSED

ANTENNA DETAILS:

ITEM	TYPE	CELL	BEARING	HT (BASE)
A	DUAL POLAR	1	90°	25m
B	DUAL POLAR	2	210°	25m
C	DUAL POLAR	3	330°	25m
FEEDER LENGTH	TBA			

ALL BEARINGS MEASURED EAST OF GRID NORTH

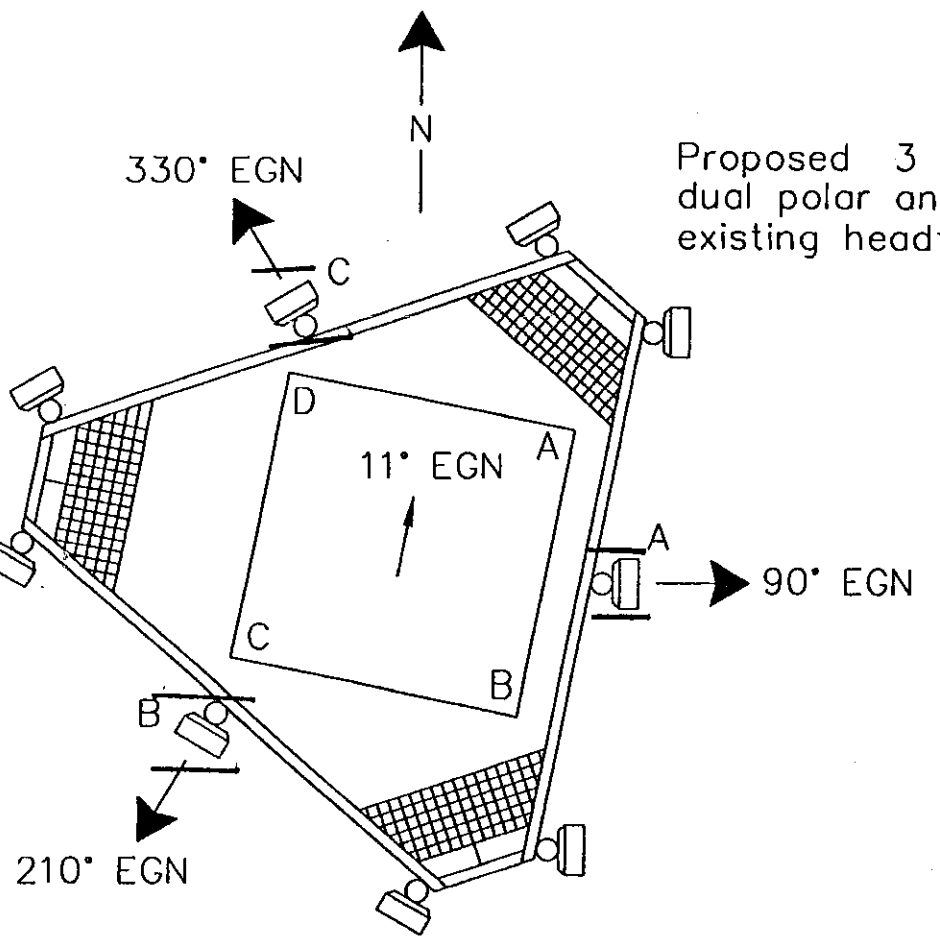

Proposed 3 off Vodafone dual polar antennas on existing headframe

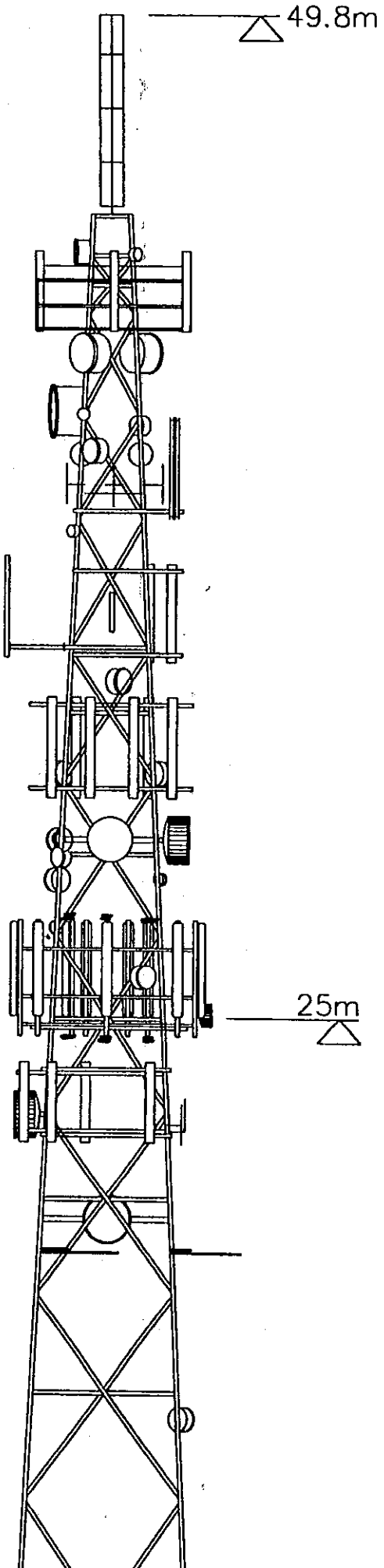

Proposed Vodafone antenna mounting concept @ 25m (NTS)

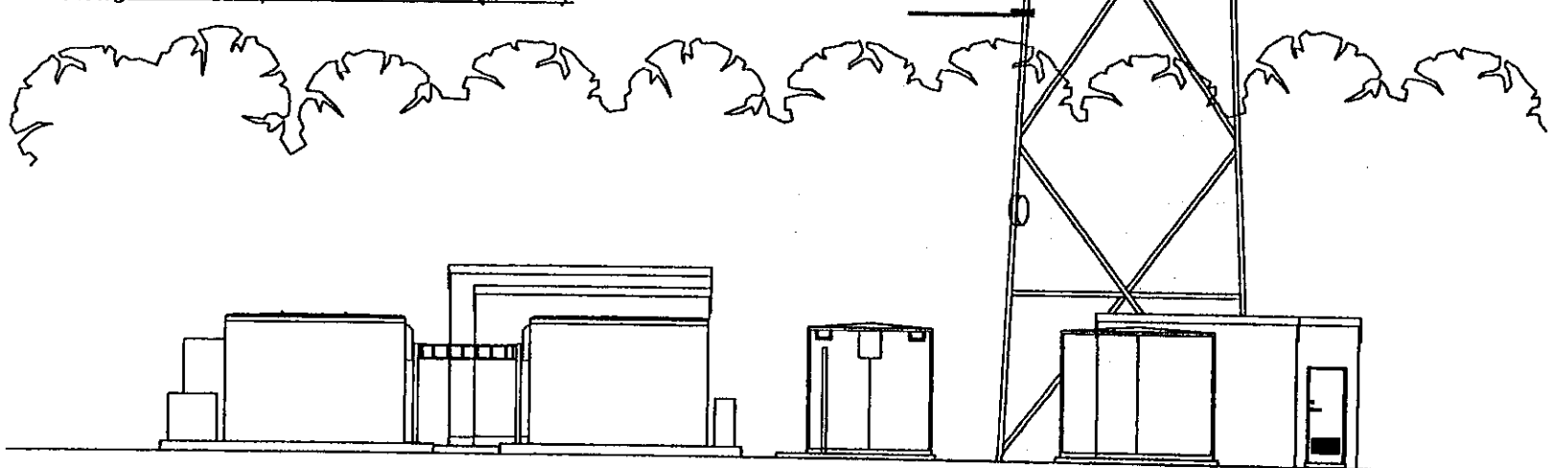

NOTES

1) DO NOT SCALE DIMENSIONS
2) ALL DIMENSIONS IN MILLIMETRE UNLESS OTHERWISE STATED

CROWN CASTLE INTERNATIONAL

Iss	Revision	Date	Dr
2	3G antenna added Rev. Eng. P. Jones	7.7.00	TPM
2	New border added & dish added Job No. 1305/00	28.01.00	AS
1	FIRST ISSUE Job No. 1344/99	15.2.99	BW

This drawing is the property of CROWN CASTLE UK LIMITED and may not be reproduced or disclosed to a third party in any form without written permission

Crown Castle International
PO Box 98
Warwick
CV34 6TN
TEL: 01926 416000 FAX: 01926 416800

HENLEY-ON-THAMES

VODAFONE INSTALLATION
NORTH ELEVATION

NGR: SU 7100 7620

Scale: 1:200 Date: 15.02.99
Drn: BAW App: MT

Drg No 14479.2.15/3

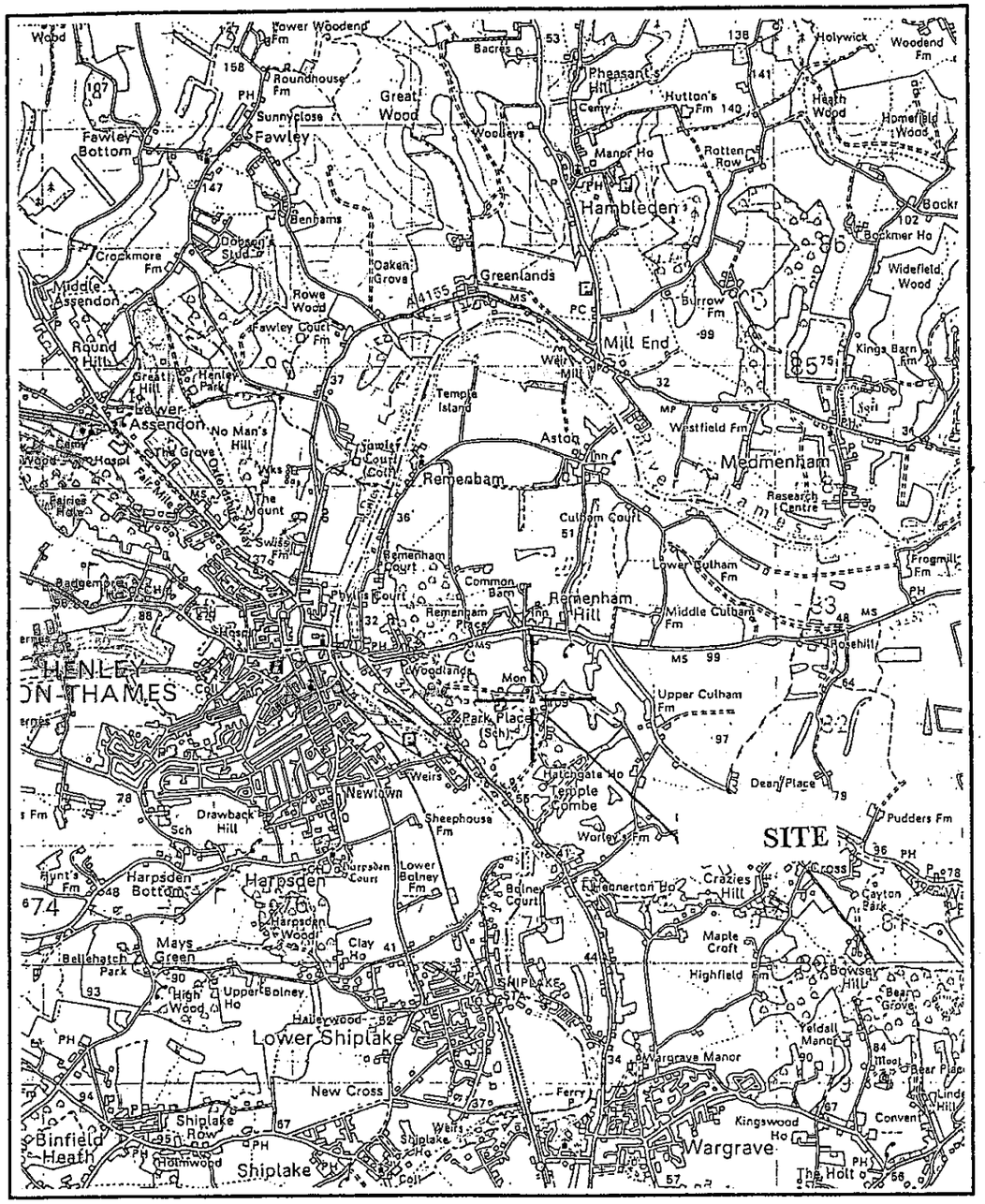

REPRODUCED FROM OS SHEET NO.151 1984 1:50,000
WITH THE PERMISSION OF THE CONTROLLER, H.M.S.O. © CROWN COPYRIGHT.
CROWN CASTLE INTERNATIONAL LTD. LICENCE NO. AL 52065A0001.

AREA MAP

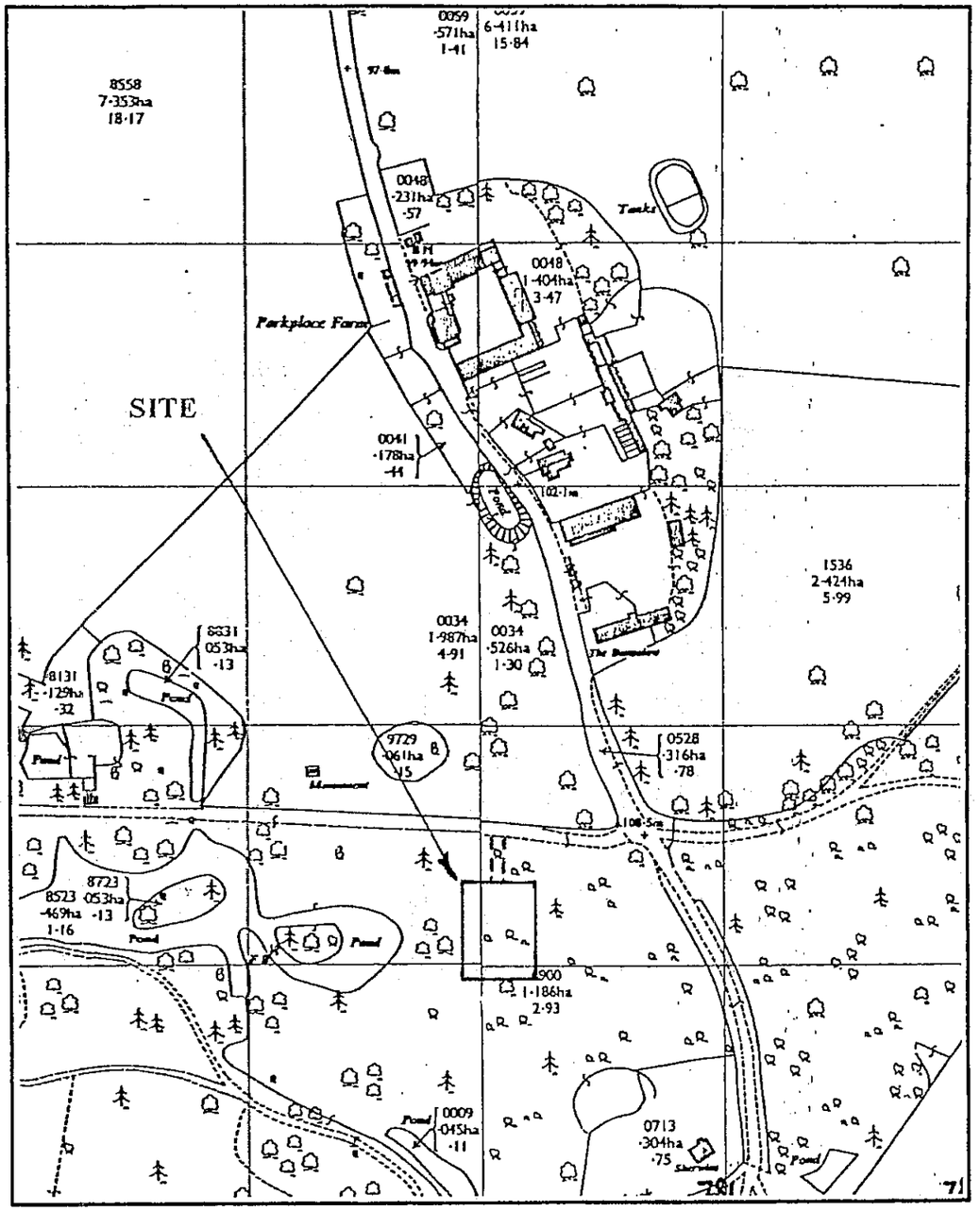

REPRODUCED FROM OS SHEET NO.06963.1999. 1:2500
WITH THE PERMISSION OF THE CONTROLLER, H.M.S.O. © CROWN COPYRIGHT.
CROWN CASTLE INTERNATIONAL LTD. LICENCE NO. AL 52065A0001.

SITE MAP

0 10 20 30 40 50 60 70 80 90 100

CROWN CASTLE INTERNATIONAL

NOTES

1) DO NOT SCALE DIMENSIONS
2) ALL DIMENSIONS IN MILLIMETRES UNLESS OTHERWISE STATED

Iss	Revision	Date	Drn	App
3	Revised by C. Kendrick (1362/00)I New surround.	26.01.00	HLJ	CK
2	Orig. Eng. C. Mann (1514/98)I Initial issue.	21.01.98	RWB	CM

© This drawing is the property of CROWN CASTLE UK LIMITED and may not be reproduced or disclosed to a third party in any form without written permission

Crown Castle International
PO Box 968
Warwick
CV34 6TN
TEL: 01926 416000 FAX: 01926 416800

HENLEY ON THAMES

AREA & SITE LOCATION MAPS

NGR: SU 7800 8220

Scale: As shown Date: 21.10.1998
Drn: RWB App: CM

Drg No 14479.2.04/3

A3

vodafone project pegasus

CELL No:	0085
SITE NAME	HENLEY-ON-THAMES
SITE ADDRESS	REMENHAM HILL REMENHAM HENLEY-ON-THAMES OXFORDSHIRE
NGR	SU 7100 7620
APPLICATION No:	TBA
STATUS	PROPOSED

ANTENNA DETAILS:

ITEM	TYPE	CELL	BEARING	HT (BASE)
A	DUAL POLAR	1	90°	25m
B	DUAL POLAR	2	210°	25m
C	DUAL POLAR	3	330°	25m
FEEDER LENGTH	TBA			

ALL BEARINGS MEASURED EAST OF GRID NORTH

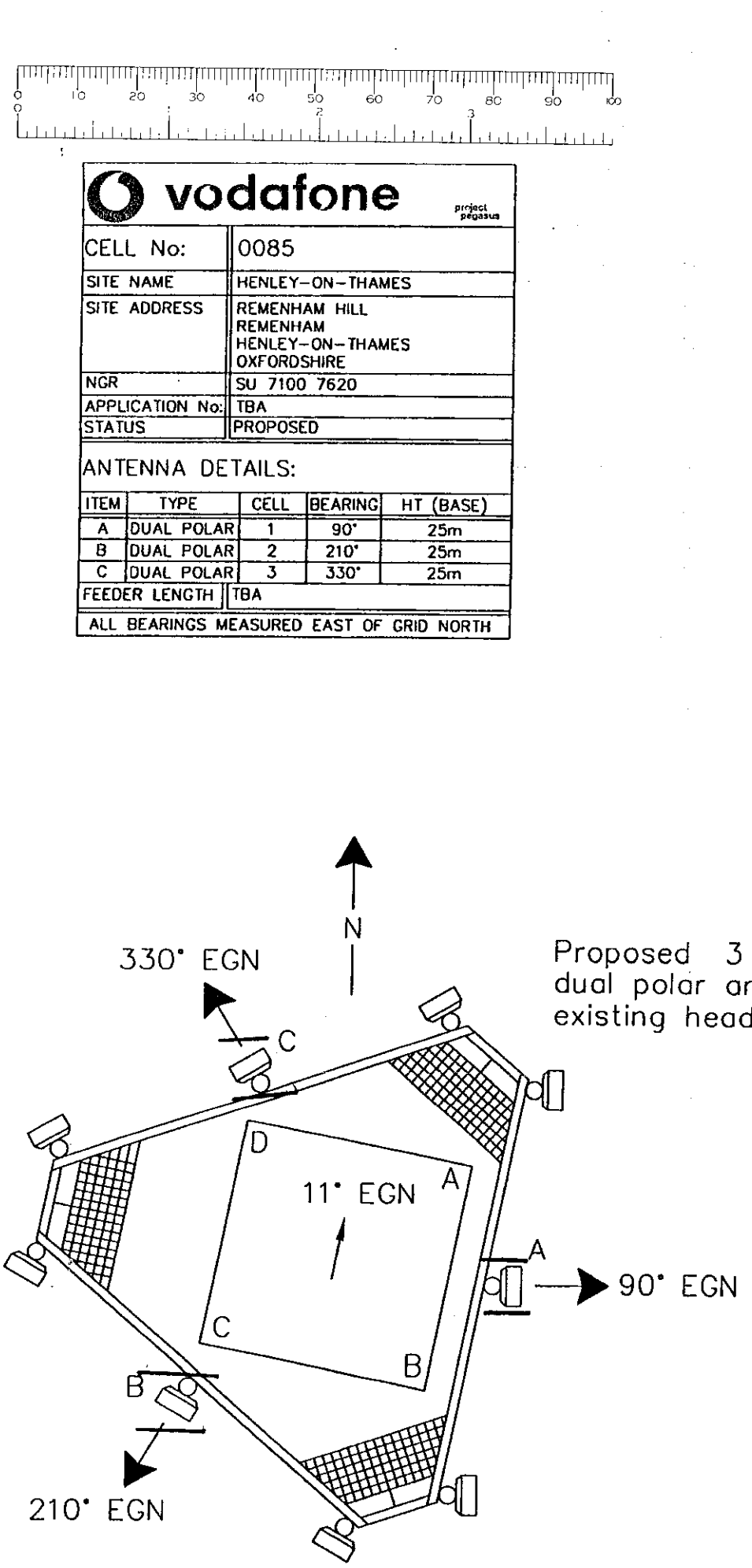

Proposed 3 off Vodafone dual polar antennas on existing headframe

Proposed Vodafone antenna mounting concept @ 25m (NTS)

NOTES

1) DO NOT SCALE DIMENSIONS
2) ALL DIMENSIONS IN MILLIMETRE UNLESS OTHERWISE STATED

CROWN CASTLE INTERNATIONAL

Iss	Revision	Dn	
2	JG antenna added Rev. Eng. P. Jones	7.7.00	TPJ
2	New border added & disk added Job No. 1305/00	28.01.00	AS
1	FIRST ISSUE Job No. 1344/99	15.2.99	BM

This drawing is the property of CROWN CASTLE UK LIMITED and may not be reproduced or disclosed to a third party in any form without written permission

Crown Castle International
PO Box 98
Warwick
CV34 6TN
TEL: 01926 416000 FAX: 01926 416600

HENLEY-ON-THAMES

VODAFONE INSTALLATION
NORTH ELEVATION

NGR: SU 7100 7620

Scale: 1:200 Date: 15.02.99
Drn: BAW App: MT

Drg No 14479.2.15/3

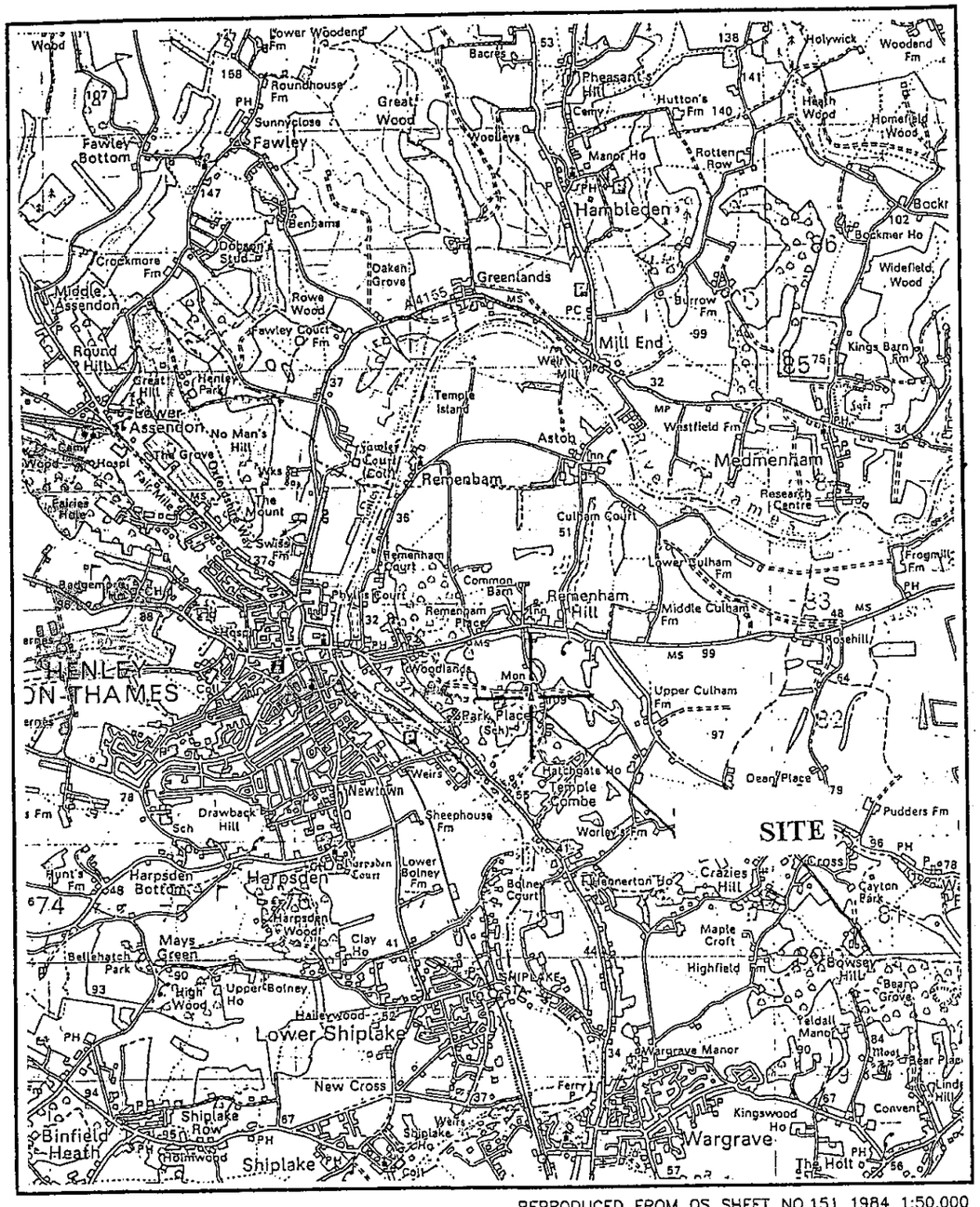

REPRODUCED FROM OS SHEET NO.151 1984 1:50,000
WITH THE PERMISSION OF THE CONTROLLER, H.M.S.O. © CROWN COPYRIGHT.
CROWN CASTLE INTERNATIONAL LTD. LICENCE NO. AL 52065A0001.

AREA MAP

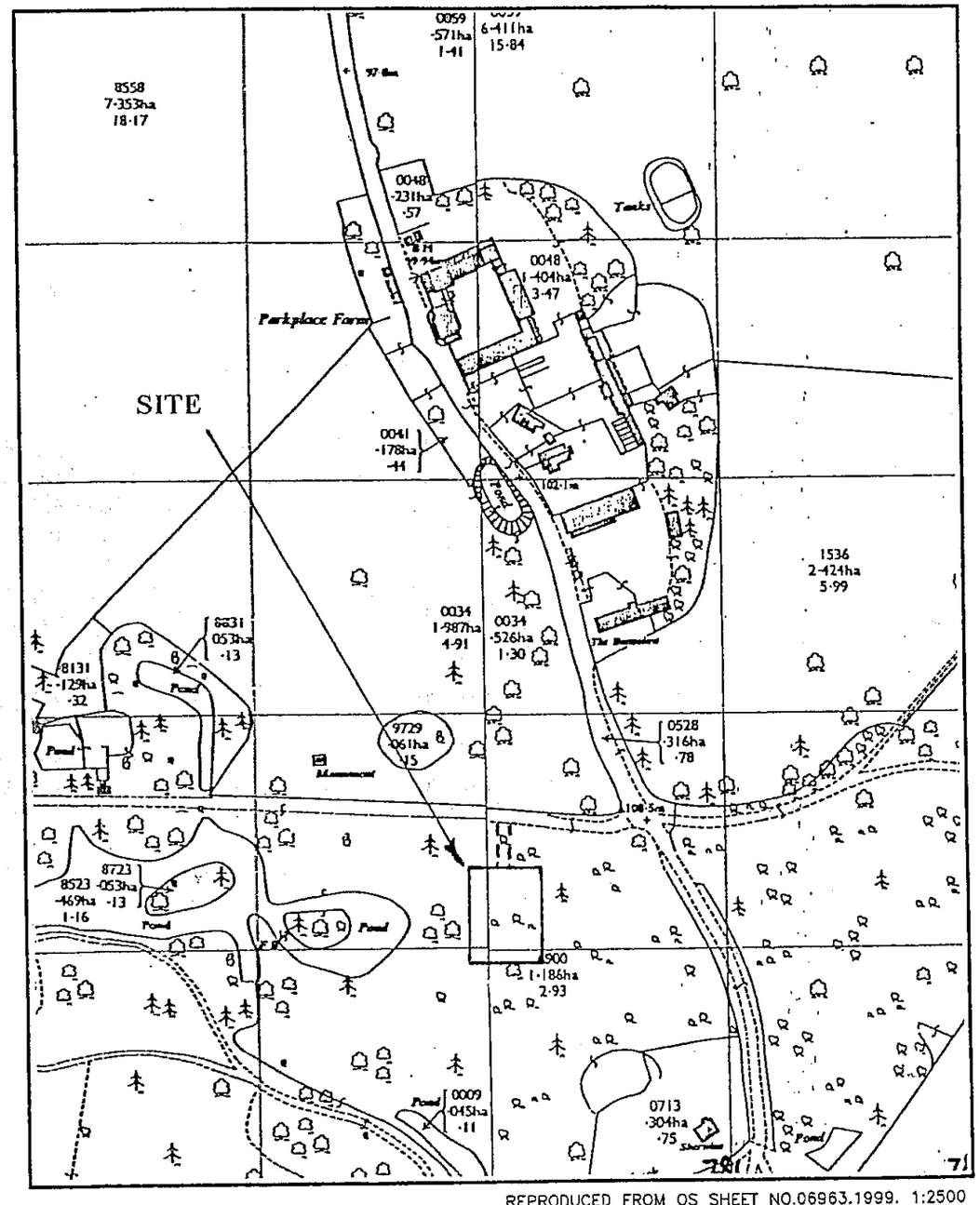

REPRODUCED FROM OS SHEET NO.06963.1999. 1:2500
WITH THE PERMISSION OF THE CONTROLLER, H.M.S.O. © CROWN COPYRIGHT.
CROWN CASTLE INTERNATIONAL LTD. LICENCE NO. AL 52065A0001.

SITE MAP

0 10 20 30 40 50 60 70 80 90 100

CROWN CASTLE INTERNATIONAL

NOTES

1) DO NOT SCALE DIMENSIONS

2) ALL DIMENSIONS IN MILLIMETRES UNLESS OTHERWISE STATED

Iss	Revision	Date	Drn	App
3	Revised by C. Kendrick (13362/00)) New surround.	28.01.00	HLJ	CK
2	Orig. Eng., C. Mann (13514/98)) Initial issue.	21.01.98	RWB	CM

© This drawing is the property of CROWN CASTLE UK LIMITED and may not be reproduced or disclosed to a third party in any form without written permission

Crown Castle International
PO Box 198
Warwick.
CV34 6TN
TEL: 01926 416000 FAX: 01926 416600

HENLEY ON THAMES

AREA & SITE LOCATION MAPS

NGR: SU 7800 8220

Scale: As shown Date: 21.10.1998
Drn: RWB App: CM

Drg No 14479.2.04/3

A3

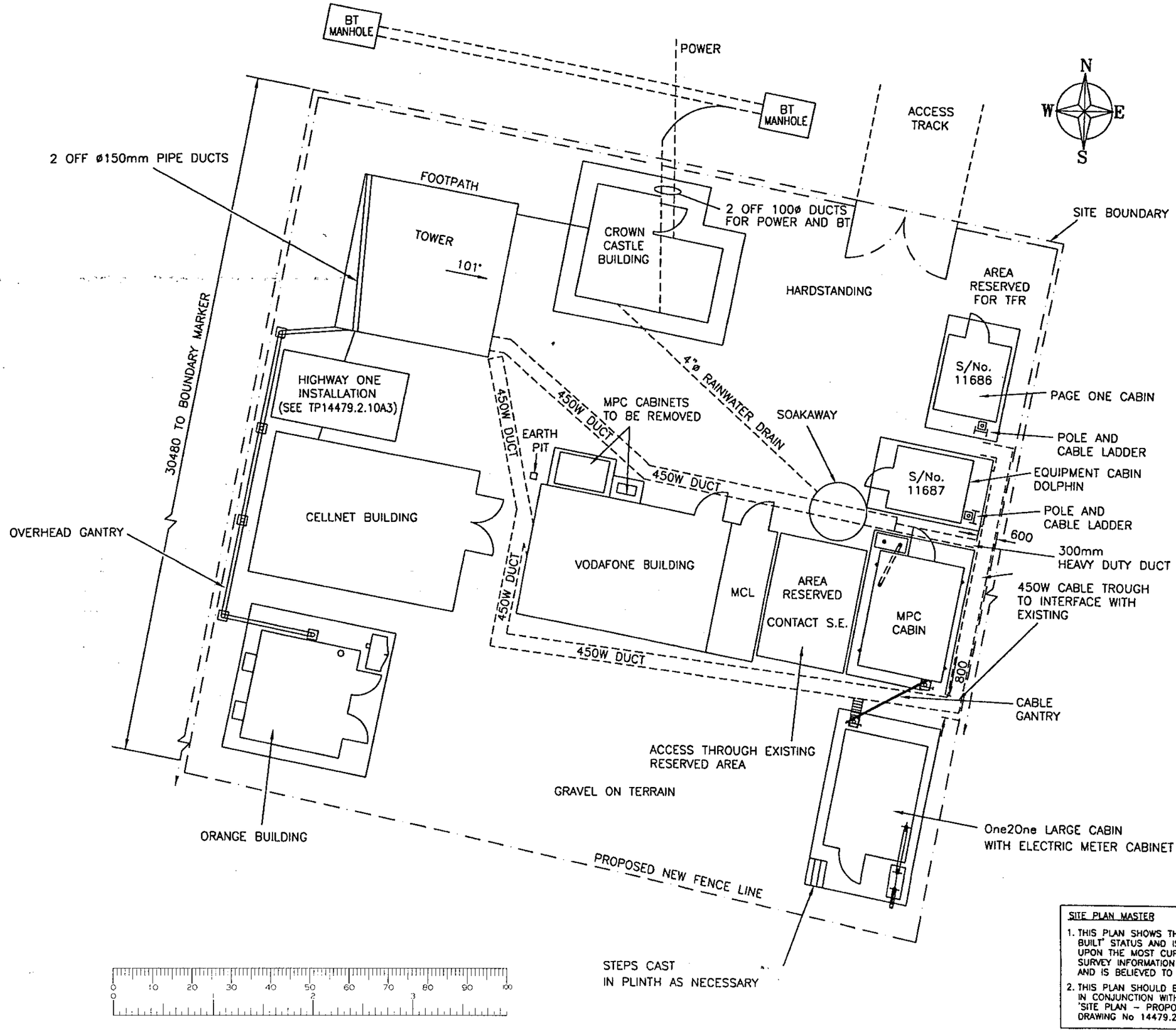

SITE PLAN MASTER

1. THIS PLAN SHOWS THE 'AS BUILT' STATUS AND IS BASED UPON THE MOST CURRENT SURVEY INFORMATION AVAILABLE AND IS BELIEVED TO BE CORRECT.
2. THIS PLAN SHOULD BE READ IN CONJUNCTION WITH THE 'SITE PLAN – PROPOSED' DRAWING No 14479.2.001.

CROWN CASTLE INTERNATIONAL

NOTES

1) DO NOT SCALE DIMENSIONS
2) ALL DIMENSIONS IN MILLIMETRES UNLESS OTHERWISE STATED

Iss	Revision	Dn'	Drn
1	AS-BUILT Job ref:2858/00	20.6.00	BAA

This drawing is the property of CROWN CASTLE UK LIMITED and may not be reproduced or disclosed to a third party in any form without written permission

Crown Castle International
PO Box 98
Warwick
CV34 6TN
TEL: 01926 416000 FAX: 01926 416600

HENLEY-ON-THAMES

SITE PLAN
MASTER

NGR: SU 7800 8220

Scale: 1:125 Date: 20.6.00
Drn: BAA App: PR

Drg No 14479.2.000/1

Fri Jul 07 10:20:46 2000 (TPM) UNCONTROLLED COPY