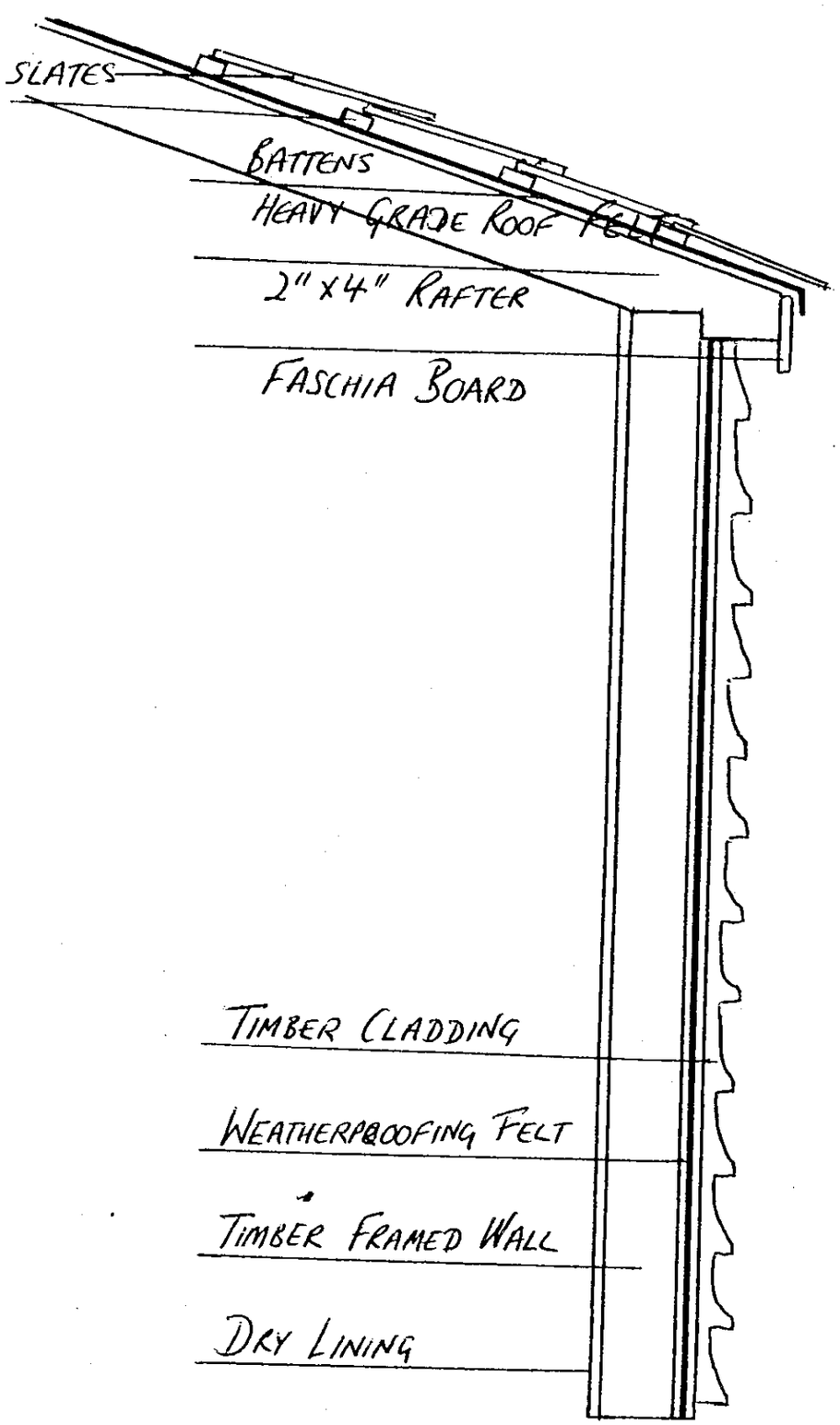

- CROSS SECTION SHOWING ROOFING MATERIALS :
- 2x4 TIMBER RAFTERS
- FELT
- BATTENS
- SLATE TILES

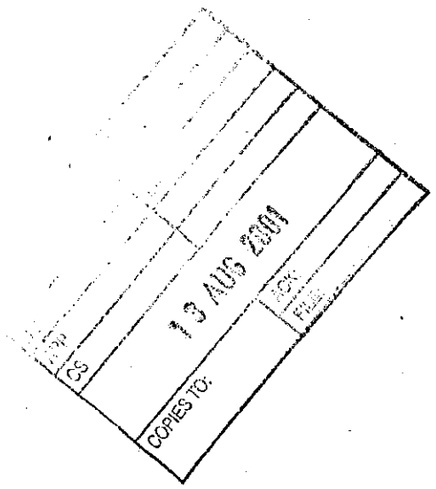

2810

ADDITIONAL PLAN

SIDE-ELEVATION DRAWING SHOWING WHERE REAR EXTENSION OF NO. 52 ROSE ST. (A) ADJOINS FLAT ROOF KITCHEN EXTENSION OF NO. 50 ROSE ST. (B)

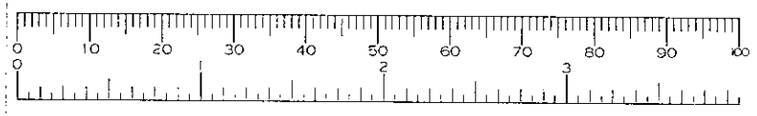

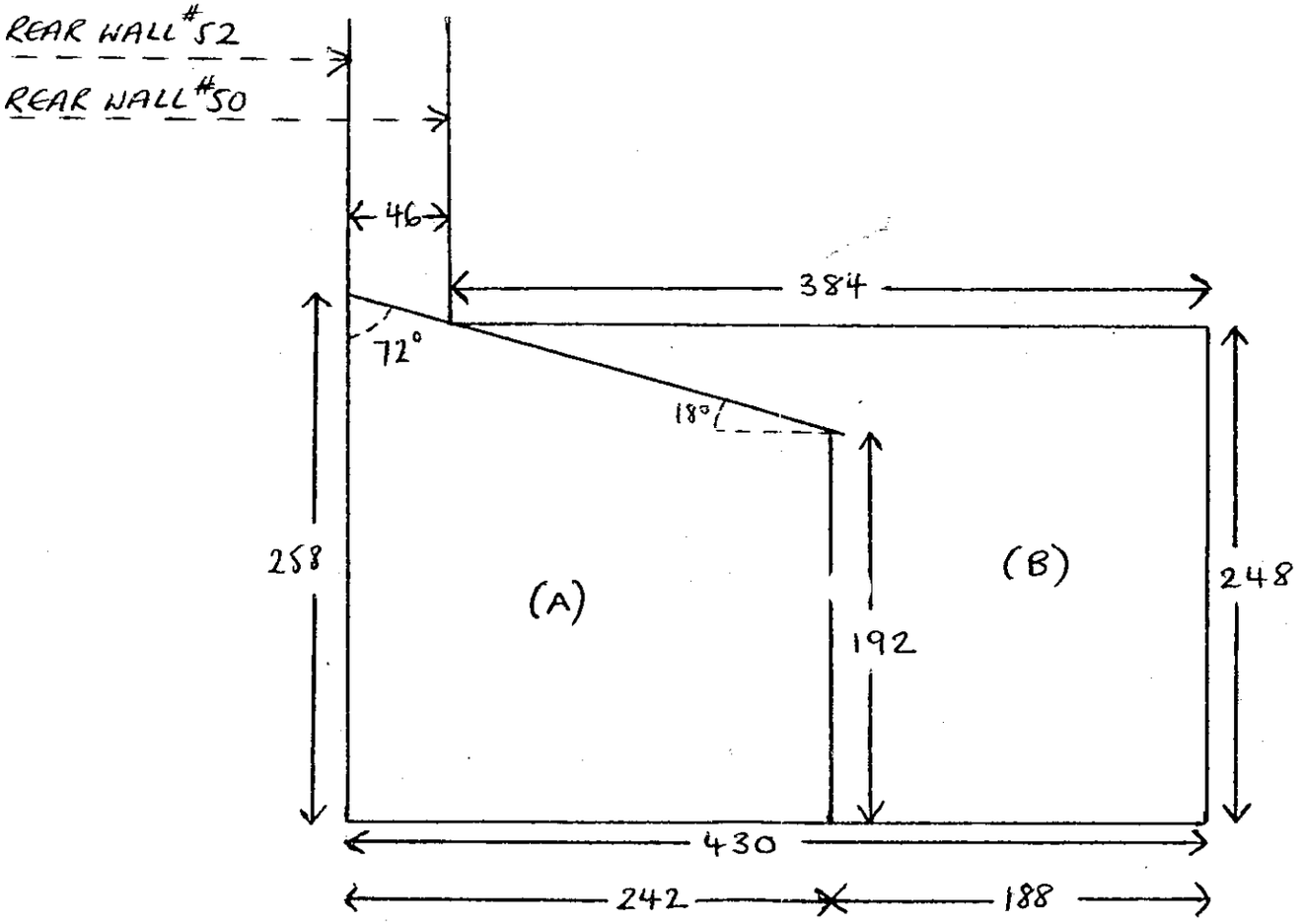

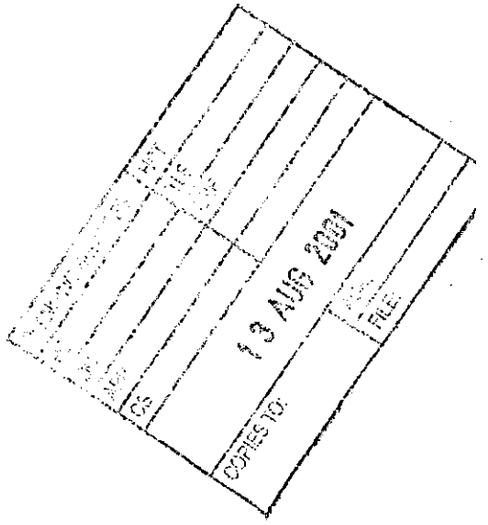

SCALE 1:50

UNITS OF MEASUREMENT - CM

2810

ADDITIONAL PLAN

2810

ADDITIONAL PLAN

SIDE- ELEVATION DRAWING SHOWING WHERE REAR EXTENSION OF NO. 52 ROSE ST. (A) ADJOINS FLAT ROOF KITCHEN EXTENSION OF NO. 50 ROSE ST. (B)

Superseded

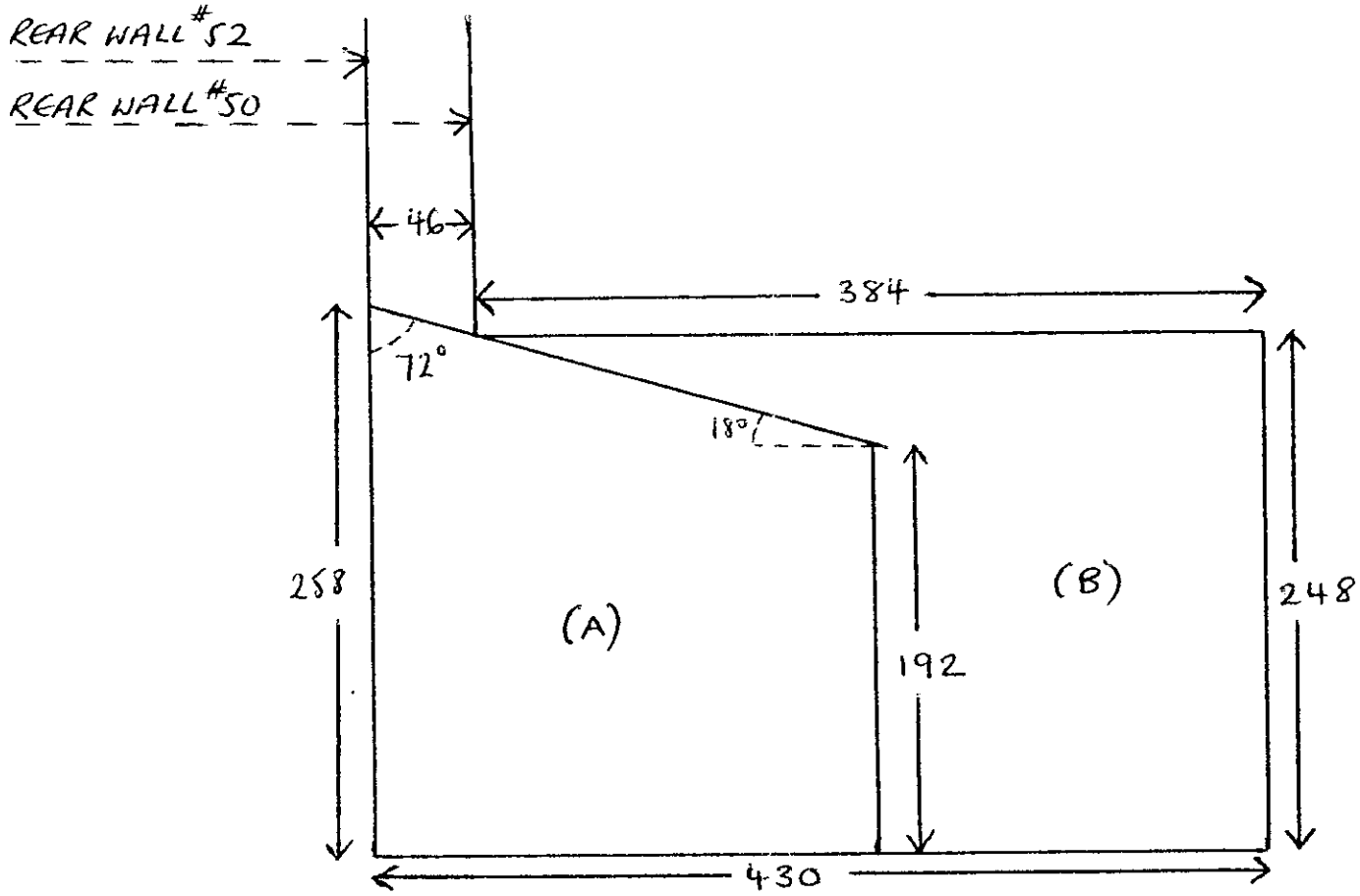

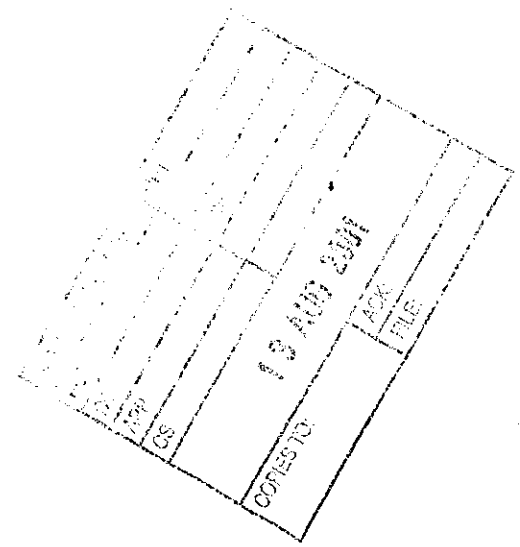

SCALE 1:50
UNITS OF MEASUREMENT - CM

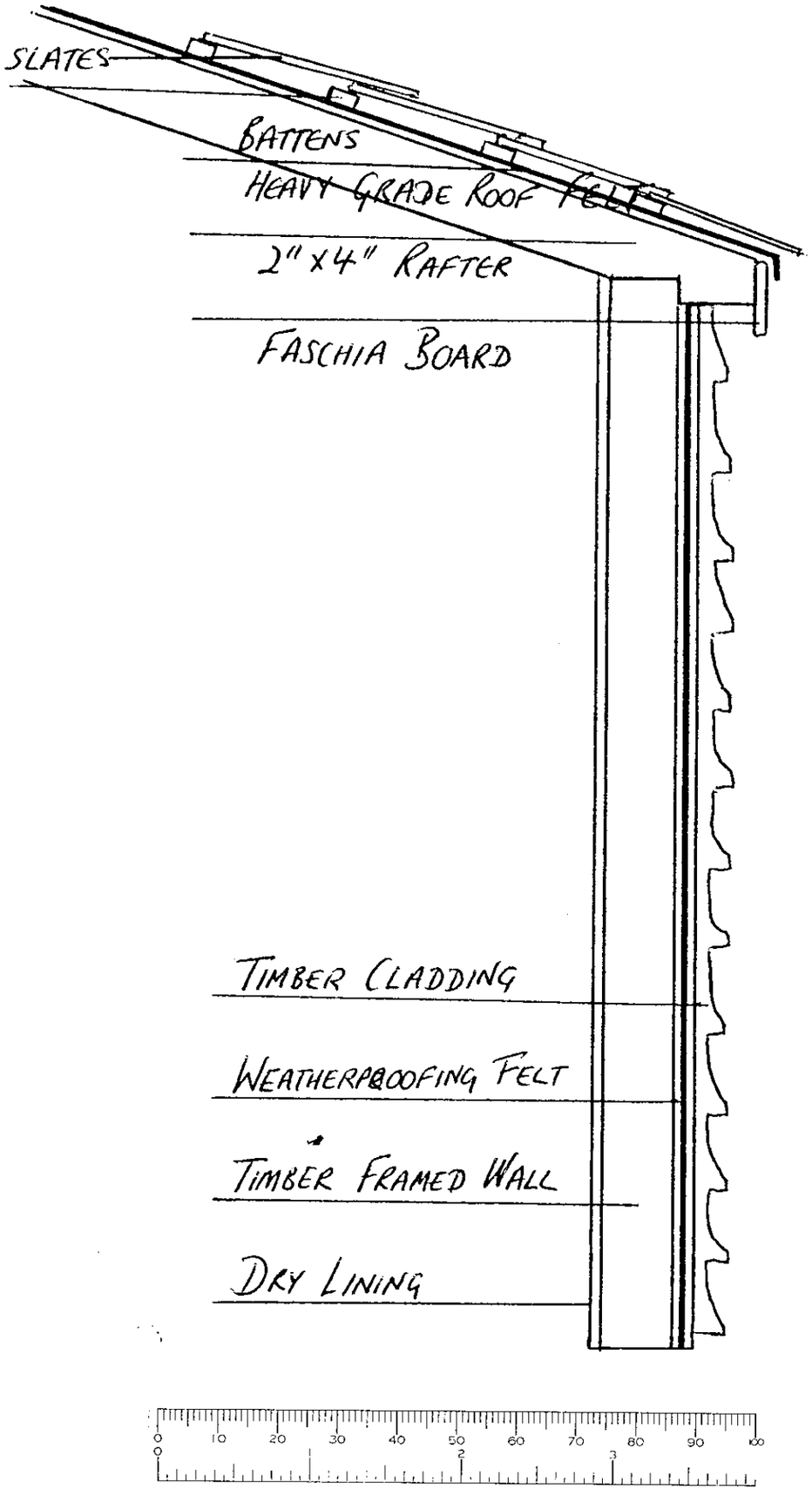

CROSS SECTION SHOWING ROOFING MATERIALS :

- 2 x 4 TIMBER RAFTERS
- FELT
- BATTENS
- SLATE TILES

Superseded

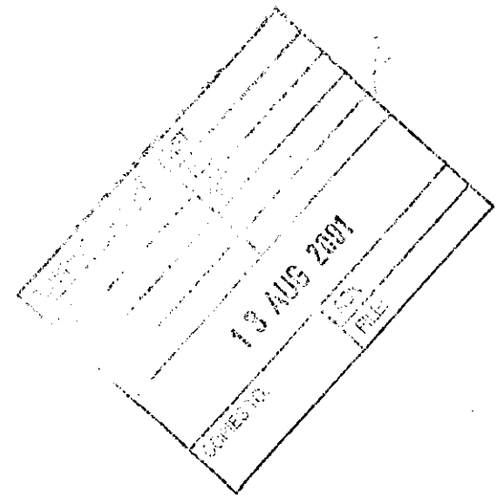

28:10

ADDITIONAL PLAN

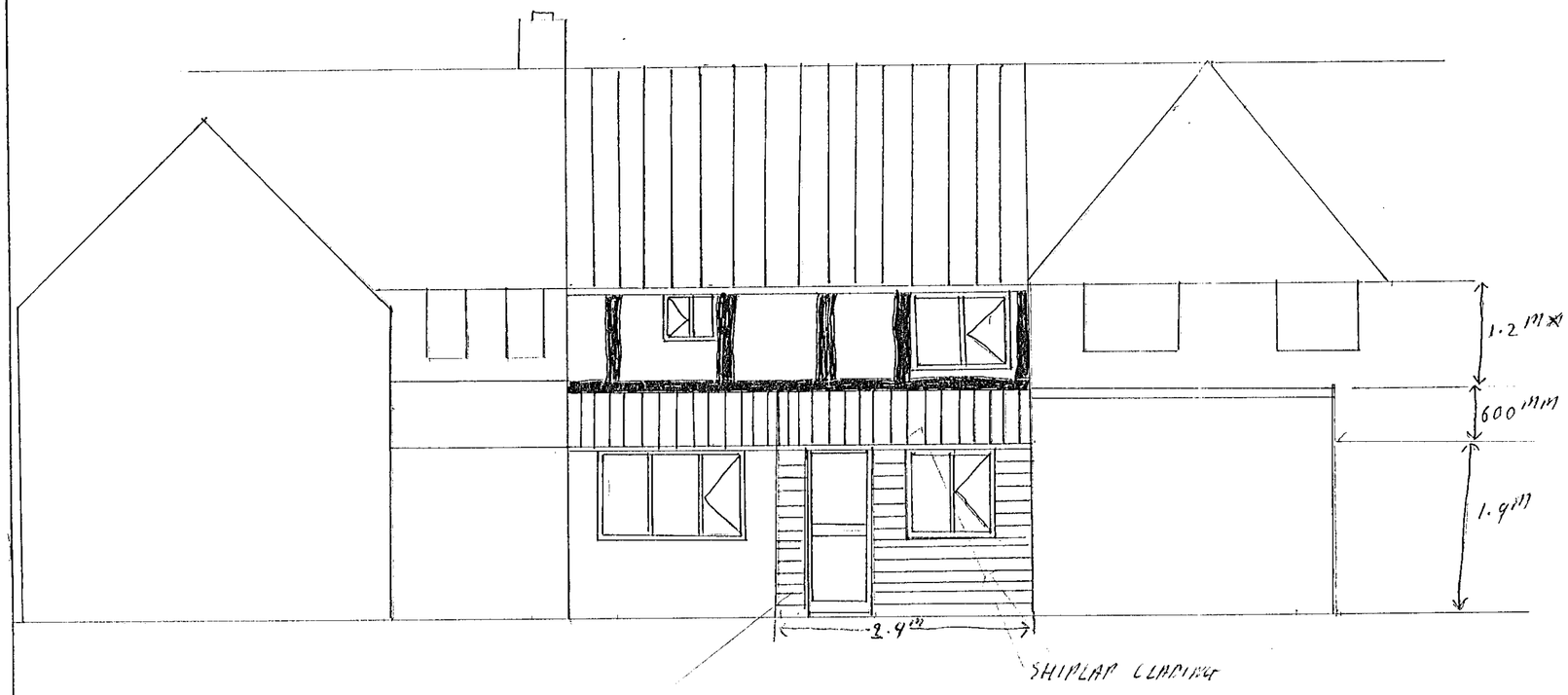

REPLACE EISTING EXTESION
WITH NEW OF THE SAME SIZE

SHIPLAP CLADING

SLATE ROOF TO REPLACE
OLD TIN ROOF

Scale 1:50
see ~~to~~ email dated 17 July 2001

REPLACE EXISTING EXTENSION WITH NEW OF THE SAME WIDTH, HEIGHT, AND DEPTH

WALLS TO BE CLAD WITH SHIPLAP CLADING AS EXISTING.

ROOF TO BE SLATE TO REPLACE OLD TIN ROOF AND TO MATCH KITCHEN EXTENSION.

APPROVED

Address
Mr C Rhodes
52 ROSE STREET
WOKINGHAM
BERKS
RG40 1XU

DATE 10.6.2001

No R.01

DRAWN
A. WILSON

PLANNING
POL
DC
APP
CS
14 JUN 2001
COPIES TO:
ACK:
RE: