08/02/00 TL/2000/0493

THIS DRAWING TO BE READ IN CONJUNCTION WITH THE FOLLOWING DRAWING Nos.

1. 30/BRK7033E/02

EQUIPMENT COLOURS
(SPECIFIED BY BS No.)

1. LAMPPOST: Column standard Galv finish
2. CABINET: Midnight green BS 4800 12 B 29
3. ANTENNA: N/A

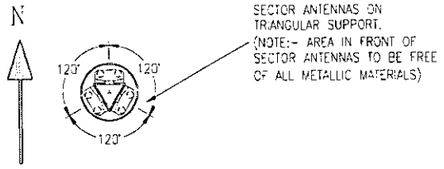

SECTIONAL PLAN ON A-A
(SEE DETAIL ACROSS FOR LOCATION)

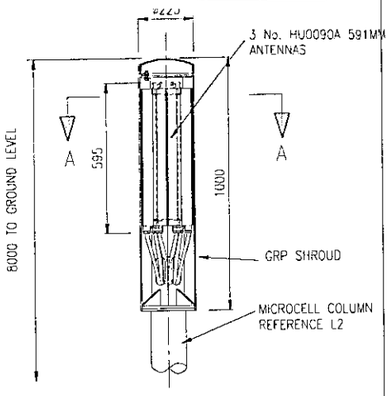

ELEVATION ON ANTENNA
ANTENNA DETAIL
SCALE :- 1:50

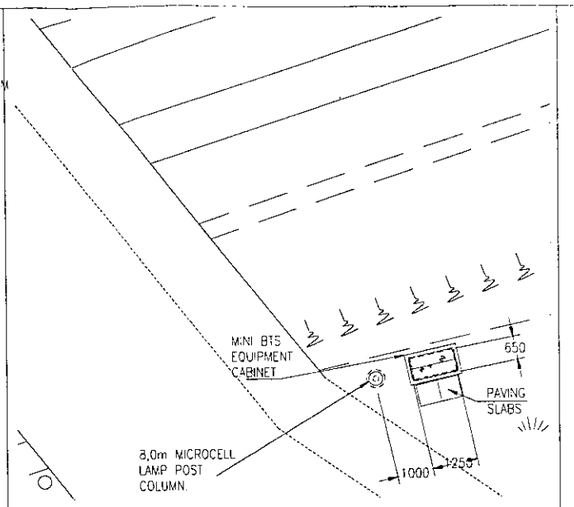

PART PLAN ON LAMPPOST COLUMN & CABINET
SCALE :- 1:175

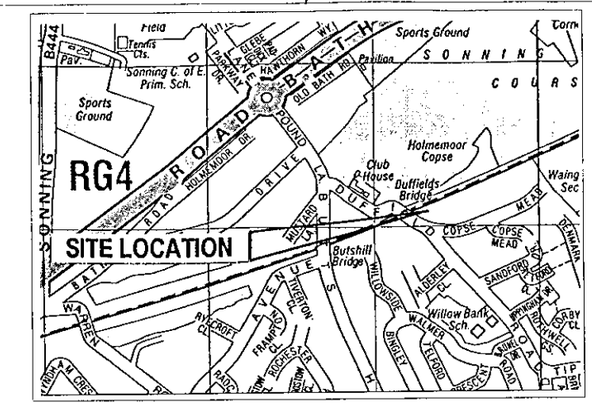

LOCATION PLAN

National Grid Reference E 476617 N 174513

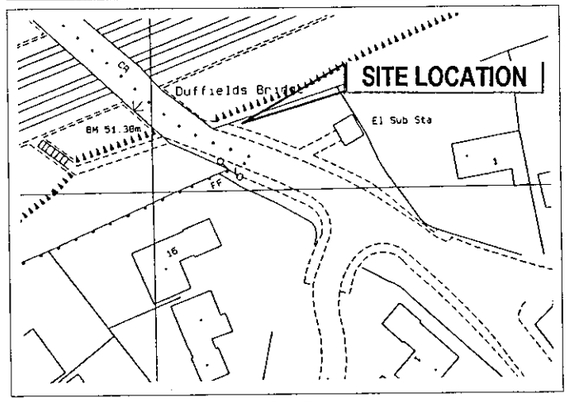

BLOCK PLAN
1:1250

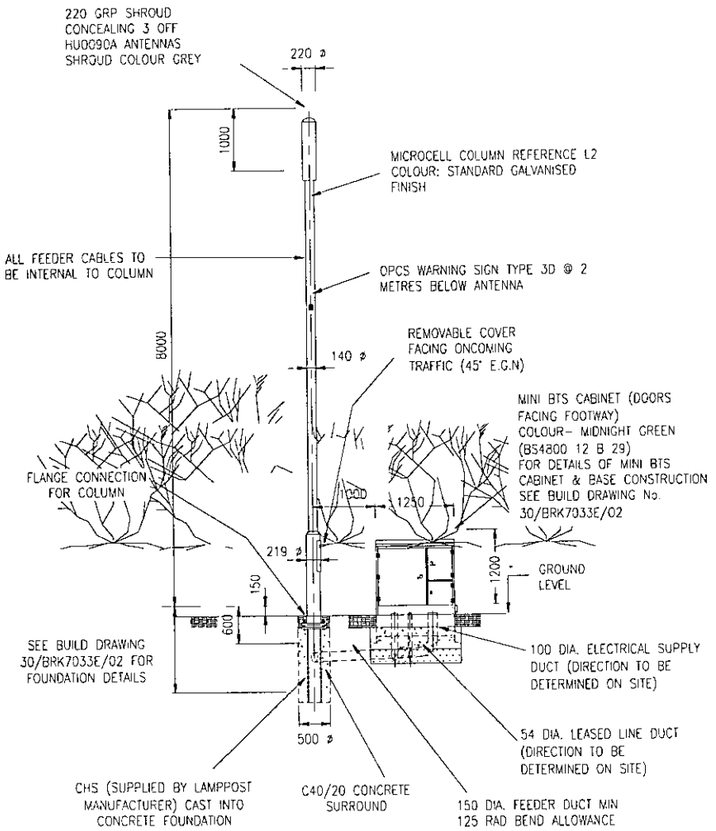

ELEVATION ON ARROW 'X' SCALE:- 1:100

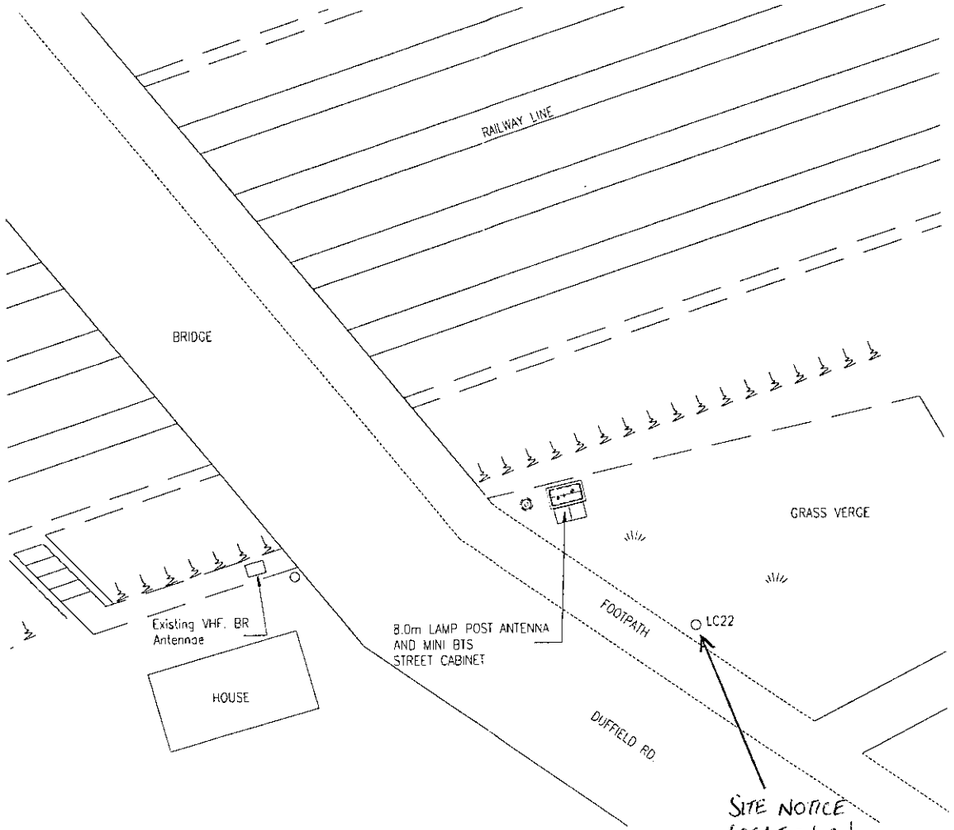

SITE PLAN
SCALE :- 1:250

UTILITIES KEY

UTILITY TYPE	CONTACT NAME	TEL. No.	SURVEY REPORT RETURN DATE
ELECTRICITY	Scottish and Southern Energy	01189 465500	16/11/99
GAS	Transco	02380 258258	22/11/99
WATER	Thames Water	0645 200800	25/11/99
SEWER	Thames Water	0645 200800	25/11/99
B.T.	B.T.	DIAL100 - ASK FOR DIAL BEFORE YOU DIG	-
OTHERS	-	-	-

PLANS ARE AVAILABLE AT THE OFFICES OF ORANGE PCS LTD. & FROM THE RELEVANT STATUTORY UNDERTAKERS SHOWING THE EXTENT OF SERVICES IN THE FOOTWAY

ANTENNA KEY

ITEM	FUNCTION / LINK No.	SECTOR	TYPE / SIZE	BEARING	HEIGHT TO C/L OF ANTENNA FROM GL (mm)	HEIGHT TO CENTRE OF DISH FROM GL (mm)	REMOTE LNA / RFU (Y/N)
A1	TXRX	-	HU0090A	0°	7600	N/A	-
A2	TXRX	-	HU0090A	120°	7600	N/A	-
A3	TXRX	-	HU0090A	240°	7600	N/A	-

FEEDER KEY

TO	QTY:	TYPE:	OUTER DIA.(mm)	MIN BEND RAD.(mm)	LENGTH (m)	COLOUR	NAME
A1	2	LDF 450	16	125	11	BLACK	-
-	-	LDF 450	16	125	11	BLACK	-
-	-	LDF 450	16	125	11	BLACK	-

REC SUPPLY REQUIRED FOR POWER

SITE NUMBER 30/BRK7033E/01

CONSULTANT
Patrick Farfan
ASSOCIATES LIMITED
E-Mail frag@patrickfarfan.com

LONDON OFFICE
Salamander Quay West
Park Lane, Harefield
Middlesex UB9 6NZ
TEL 01895 823700
FAX 01895 821414

Head Office
Saint Cuthberts,
Fourth Avenue, Trafford Park,
Manchester, M17 1QB
Tel 0161 877 7337
Fax 0161 877 4414

Offices also located in - London, Birmingham, Belfast & Austria

THIS SITE CONFORMS TO OPCS RADIO SITE DESIGN DOC: SPEC253 WITH THE FOLLOWING EXCEPTIONS:

1.
2.
3.
4.

REV	DESCRIPTION	SITE CONTROLLER	DATE	DESIGN	DATE
0	INITIAL ISSUE	SMP	04/02/00	GP	04.02.00

SCALE:-	AS SHOWN	CHECKED	SMP
		DATE	04/02/00
DRAWN	SS	APPROVED	GP
DATE	25/01/2000	DATE	04.02.00

A3 ORIGINAL

INCHES
0 1/2 1
0 5 10 15 20 25 30 35

MILLIMETRES

ALL DIMENSIONS ARE IN MILLIMETRES UNLESS OTHERWISE STATED

OPTION NAME
COPSE MEAD

SITE ADDRESS
GRASS VERGE, EAST SIDE
ADJACENT TO SOUTH SIDE
OF RAILWAY
DUFFIELD ROAD
WOODLEY
READING RG5 4RP

SITE CONTROLLER: [redacted]

NETWORK ENGINEER: [redacted]

TITLE
MICROCELL - BUTTS HILL Rd., SONNING
LAMPPOST MOUNTED ANTENNA
GENERAL ARRANGEMENT

DRAWING NUMBER 30/BRK7033E/01

REV 0

CLIENT
orange

St. James Court
Great Park Road
Almondsbury Park
Bradley Stoke
Bristol
BS12 4QJ
Tel 01454 624600
Fax 01454 616531

TL/2000/0493 8/2/00

0 10 20 30 40 50 60 70 80 90 100
0 2 3

THIS DRAWING TO BE READ IN CONJUNCTION WITH THE FOLLOWING DRAWING Nos.

1. 30/BRK7033E/02

EQUIPMENT COLOURS
(SPECIFIED BY BS No.)

1. LAMPPOST: Column standard Galv finish
2. CABINET: Midnight green BS 4800 12 B 29
3. ANTENNA: N/A

N

120° 120° 120°

SECTOR ANTENNAS ON TRIANGULAR SUPPORT. (NOTE:- AREA IN FRONT OF SECTOR ANTENNAS TO BE FREE OF ALL METALLIC MATERIALS)

SECTIONAL PLAN ON A-A
(SEE DETAIL ACROSS FOR LOCATION)

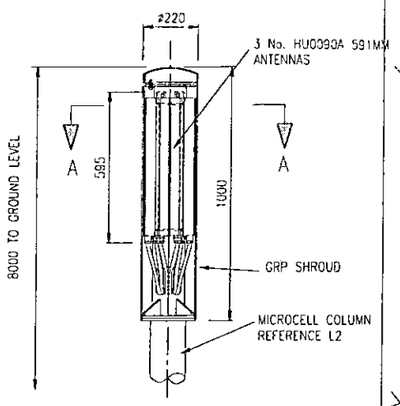

ELEVATION ON ANTENNA
ANTENNA DETAIL
SCALE :- 1:50

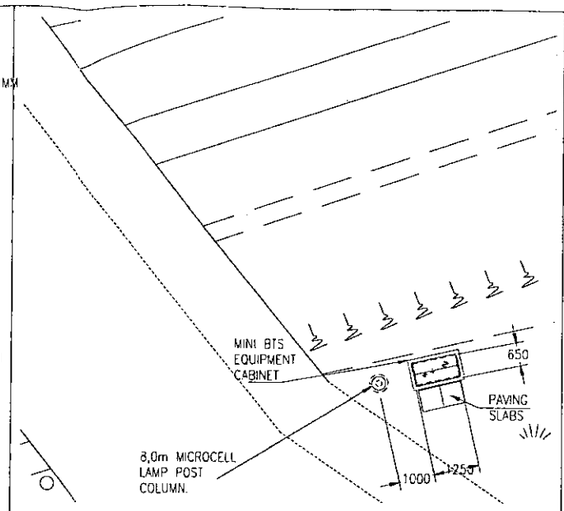

PART PLAN ON LAMPPOST COLUMN & CABINET
SCALE :- 1:175

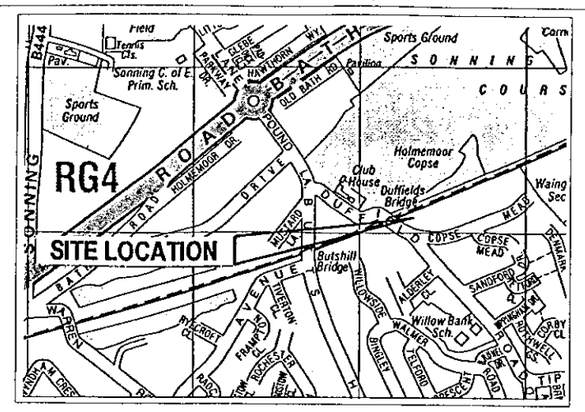

LOCATION PLAN

National Grid Reference E 476617 N 174513

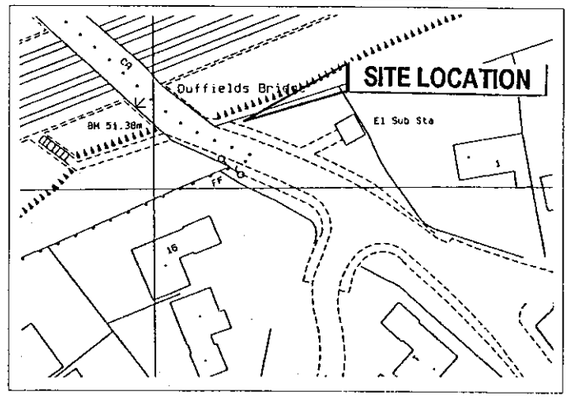

BLOCK PLAN
1:1250

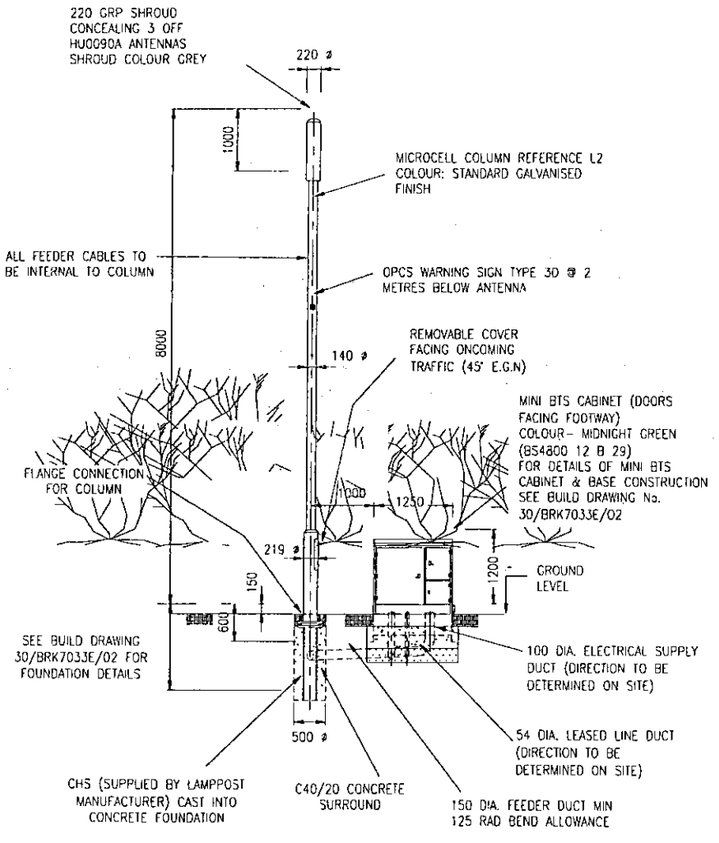

ELEVATION ON ARROW 'X' SCALE:- 1:100

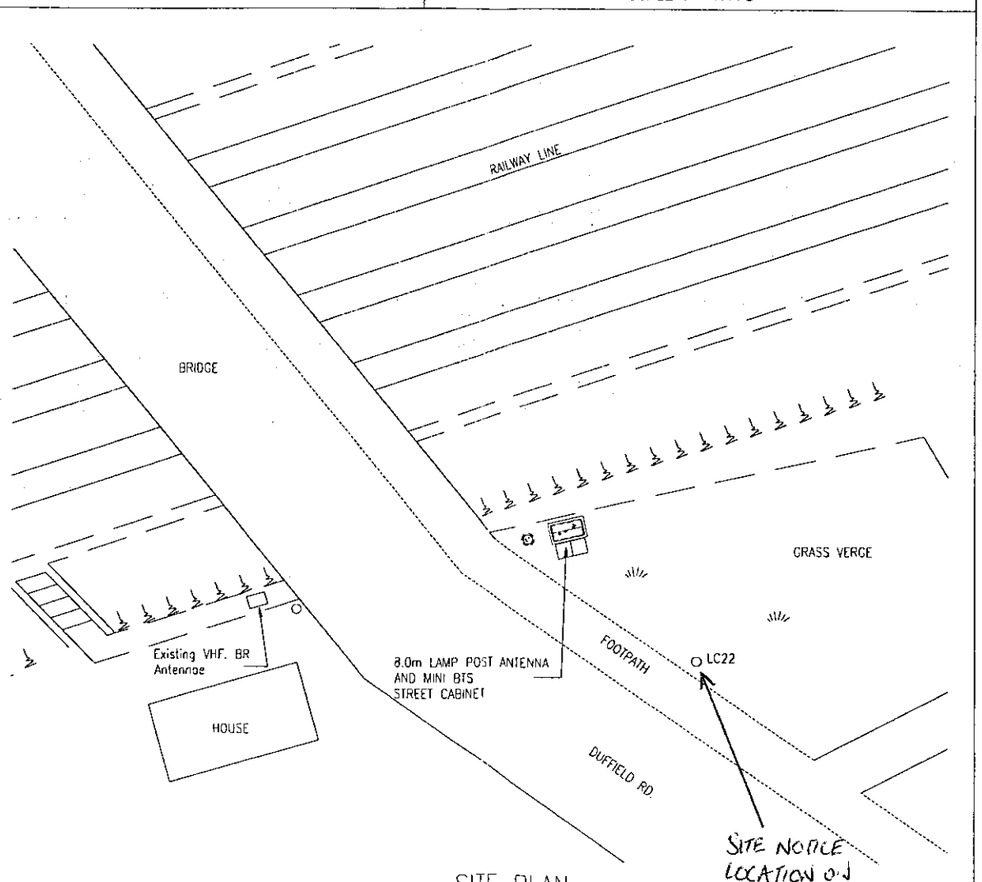

SITE PLAN
SCALE :- 1:250

UTILITIES KEY

UTILITY TYPE	CONTACT NAME	TEL. No.	SURVEY REPORT RETURN DATE
ELECTRICITY	Scottish and Southern Energy	01189 465500	16/11/99
GAS	Transco	02380 258258	22/11/99
WATER	Thames Water	0645 200800	25/11/99
SEWER	Thames Water	0645 200800	25/11/99
B.T.	B.T.	DIAL100 - ASK FOR DIAL BEFORE YOU DIG	-
OTHERS	-	-	-

PLANS ARE AVAILABLE AT THE OFFICES OF ORANGE PCS LTD. & FROM THE RELEVANT STATUTORY UNDERTAKERS SHOWING THE EXTENT OF SERVICES IN THE FOOTWAY

ANTENNA KEY

ITEM	FUNCTION / LINK No.	SECTOR	TYPE / SIZE	BEARING	HEIGHT TO C/L OF ANTENNA FROM GL (mm)	HEIGHT TO CENTRE OF DISH FROM GL (mm)	REMOTE LNA / RFU (Y/N)
A1	TXRX	-	HU0090A	0°	7600	N/A	-
A2	TXRX	-	HU0090A	120°	7600	N/A	-
A3	TXRX	-	HU0090A	240°	7600	N/A	-

FEEDER KEY

TO	QTY:	TYPE:	OUTER DIA.(mm)	MIN BEND RAD.(mm)	LENGTH (m)	COLOUR	NAME
A1	2	LDF 450	16	125	11	BLACK	-
-	-	LDF 450	16	125	11	BLACK	-
-	-	LDF 450	16	125	11	BLACK	-

REC SUPPLY REQUIRED FOR POWER

SITE NUMBER 30/BRK7033E/01

CONSULTANT

Patrick Farfan
ASSOCIATES LIMITED
E-Mail frog@patrickfarfan.com

LONDON OFFICE
Salamander Quay West
Park Lane, Harefield
Middlesex UB9 6NZ
TEL 01895 823700
FAX 01895 821214

Head Office
Saint Cuthberts,
Fourth Avenue, Trafford Park,
Manchester, M17 1DS
Tel 0161 877 7007
Fax 0161 877 4414

Offices also located in London, Birmingham, Belfast & Austria

THIS SITE CONFORMS TO OPCS RADIO SITE DESIGN DOC: SPEC253 WITH THE FOLLOWING EXCEPTIONS:

1.
2.
3.
4.

REV	DESCRIPTION	SITE CONTROLLER	DATE	DESIGN	DATE
0	INITIAL ISSUE	SNP	04/02/00	GP	04.02.00

SCALE:-	AS SHOWN	CHECKED	SNP
		DATE	04/02/00
DRAWN	SS	APPROVED	GP
DATE	05/01/2000	DATE	04.02.00

A3 ORIGINAL

INCHES
0 1/2 1

0 5 10 15 20 25 30 35
MILLIMETRES

ALL DIMENSIONS ARE IN MILLIMETRES UNLESS OTHERWISE STATED

OPTION NAME
COPSE MEAD

SITE ADDRESS
GRASS VERGE, EAST SIDE
ADJACENT TO SOUTH SIDE
OF RAILWAY
DUFFIELD ROAD
WOODLEY
READING RG5 4RP

SITE CONTROLLER: [redacted]

NETWORK ENGINEER

TITLE
MICROCELL - BUTTS HILL Rd., SONNING
LAMPPOST MOUNTED ANTENNA
GENERAL ARRANGEMENT

DRAWING NUMBER 30/BRK7033E/01 REV 0

CLIENT
orange
St. James Court
Great Park Road
Almondsbury Park
Bradley Stoke
Bristol
BS12 4QJ
Tel 01454 624600
Hutchison Telecom Fax 01454 618501