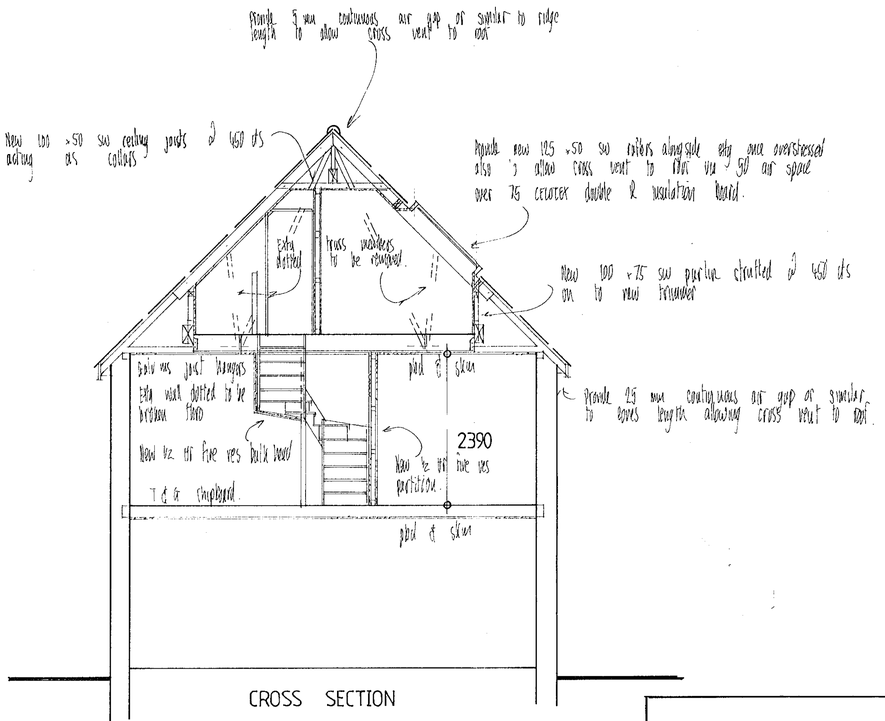


CROSS SECTION

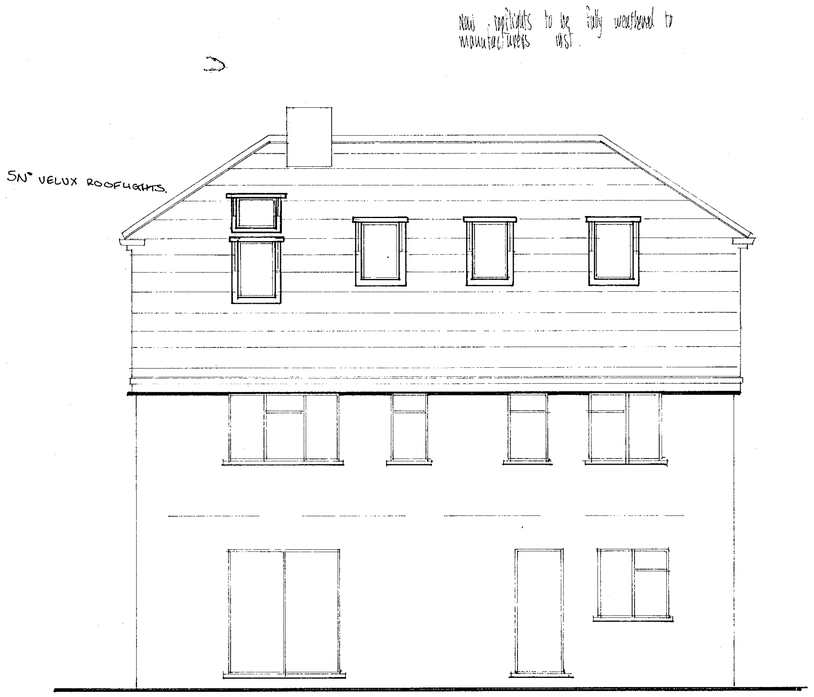


REAR ELEVATION

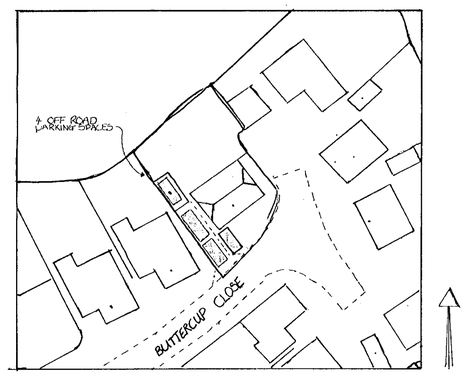


BLOCK PLAN 1:500

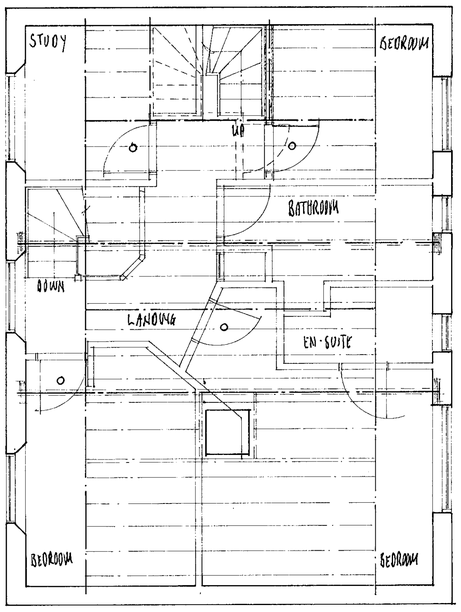


FIRST FLOOR PLAN

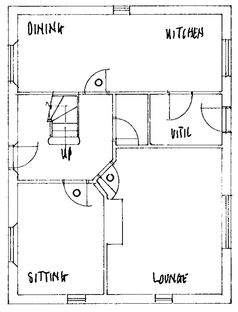


GROUND FLOOR PLAN

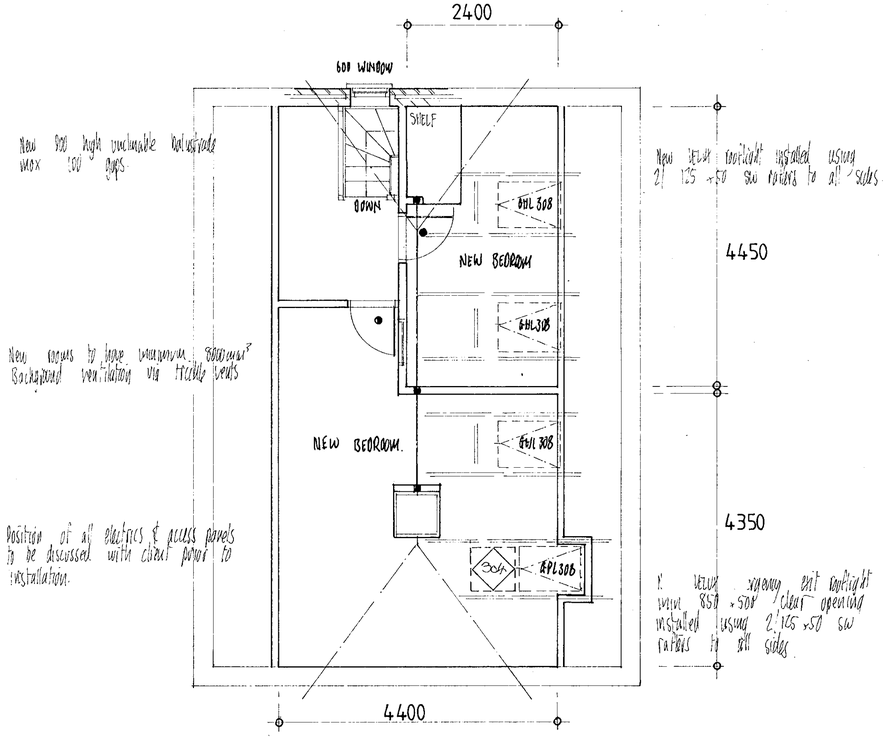


ROOF PLAN

## SPECIFICATION

CEILING
9.5mm Plasterboard and skim to existing rafters or new ceiling joists with 150mm fibreglass insulation to horizontal ceilings and Celotex double 'R' GA2059 insulation board to sloping ceilings all to give inclusive U-value of max. 0.35 and class 1 flame spread.

WALLS
a)IN ROOF SPACE
9.5mm Plasterboard and skim on 75mmx 50mm studding with 75mm x 50mm strutting where required with 100mm fibreglass insulation on back to give inclusive U-value of max. 0.45 and Class 1 flame spread. Provide 50mm x 25mm retaining battens to rear side.

b)IN ROOMS
Where Required 9.5mm Plasterboard and skim on one or both sides as applicable on 75mm x 50mm studding.

FLOORS
a)NEW FLOOR
To be full 1/2 hour fire resistant 18mm tongue and grooved chipboard on min 50mm wide joists at 400mm centres. Floor joists spanning 2.5m to 4.5m to have herringbone strutting at mid span, joists over 4.5m to have herringbone strutting at 1/3 spans of joists, adequately supported min 25mm clear of existing ceiling construction via galvanised mild steel hangers with galvanised nails or onto load bearing walls. Main trimmers to be built in or be resting on load bearing walls or hung off existing load bearing walls by heavy gauge galvanised mild steel hangers.

CEILING CONSTRUCTION OF :-
1)12.5mm Plasterboard and skim (Table 14C3 BRE Report 1998).
~~2)15mm - 20mm thick good condition plaster on timber laths. - (Table 14C1 BRE Report 1988).~~
~~3)9.5mm Plasterboard and skim, overlaid with 60mm mineral fibre, adequately supported on chicken wire nailed to joists in accordance with BRE Digest 208 1988.~~

b)EXISTING FLOOR
1)Is full 1/2 hour fire resistant.
~~2)Is modified 1/2 hour fire resistant.~~
~~3)Is modified 1/2 hour fire resistant upgraded to full 1/2 hour by overlaying with 6mm dense hardboard to applicable areas.~~

FIRE REGS
BEAMS
Where applicable timber beams to have full 1/2 hour fire resistance (sacrificial timber method). Timber min 50mm from chimneys. Steel beams protected to 1/2 hour fire resistance with 2 layers 12.5mm plasterboard with staggered joints, secured to timber cradles.

DOORS
a)All doors marked thus ○ to be made self closing with suitable device, any glazing contained within doors and fanlights to be replaced with 6mm Georgian saftey wired glass to Building Regulations B paragraph 1.25 - 1.26 and approved document part N.
b)All doors marked thus ● to be made full 1/2 hour fire resistant self closing FD20 with 25mm min rebates.

STAIRCASE
a) Traditional max. pitch 42 rise going winders to have nosing of treads making a uniform angle on plan and going to be nowhere less than 50mm.
Balustrade to staircase to be 900mm high vertically above pitch line.
Balustrade to stairwell to be 900mm high above floor level.
No spaces in risers or balustrade to allow passage of 100mm dia. sphere.

DORMER
FLAT ROOF
1 layer Marleydek FAA rated on 18mm exterior quality plywood on 200 x 50mm sw joists at 400cts. set to fall in 40 with 150mm fibreglass insulation and 9.5mm plasterboard and skim to give inclusive U-value of 0.25 max and class 1 flame spread.

CHEEKS & FRONT PANEL
Vertical tile hanging on sw battens on felt on 9.5mm plywood sheathing on 100 x 50mm sw framing within 1000 min of boundary to be lined externally with 12mm Supalux to give 1/2 hour fire resistance, with 100mm fibreglass insulation and 9.5mm plasterboard and skim to give inclusive U-value of 0.35 max and Class 1 flame spread.

GENERAL NOTES
The whole of the work is to be in accordance with the Building Regulations 1991 (with amendments).
All external stud walls to receive vapour control layer of 1200 gauge visqueen sheeting provided between plasterboard and insulation.
All double trimmers to be bolted together at 600mm cts with 16mm dia. bolts and 50mm timber connectors.
All walls shown shaded are load bearing to be confirmed on site for Local Authority inspector.
Soffit vents to eaves on opposite sides to provide cross flow ventilation to roof void equal to 25mm continuous (or similar).
Ridge vents to be provided giving cross flow ventilation to roof void equal to 5mm continuous (or similar).
All dimensions to be taken from site and not to be scaled from plans.

25.FEB.2000* 0661

| AMENDMENTS | DATE |
|---|---|
| | |
| | |
| | |

LOCAL AUTH: WOKINGHAM DC

FLASHING TYPE: EDZ | TILES: PLAIN. | CALCS ADDED:

PROPOSED LOFT CONVERSION AT:-
11 BUTTERCUP CLOSE
WOKINGHAM

FOR MR MRS TUNESI

CONTRACT No. 55016

| SCALE | DATE | DWG. No. |
|---|---|---|
| 1:50 1:100 | JAN 00 | 5743 |

Elite Econoloft Ltd.
*The Loft Conversion Authority*

Graphic Design Supplies DS-(UK)-981236