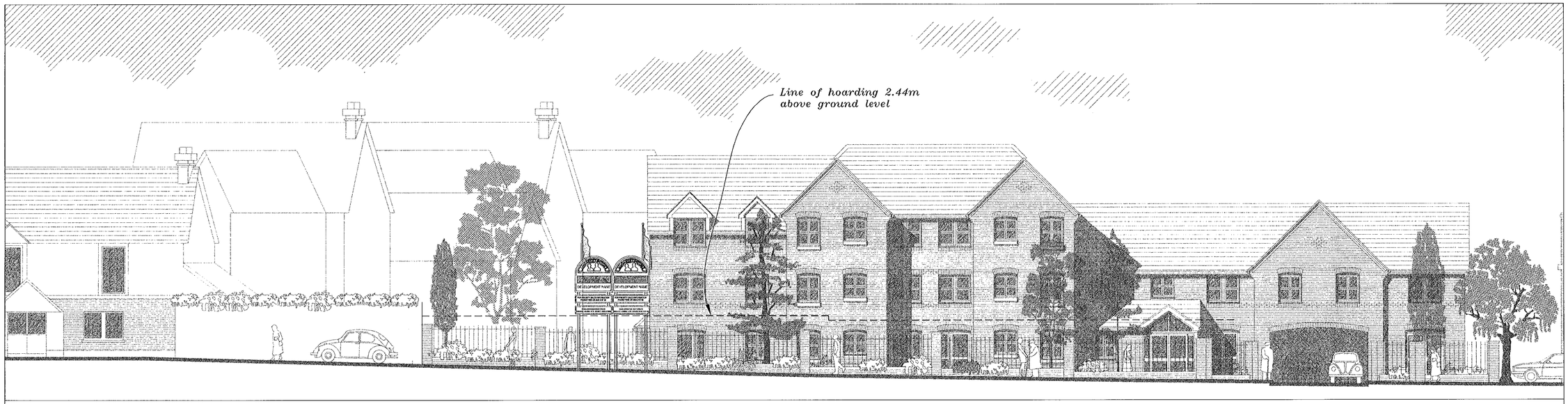

St PETERS CLOSE ELVEATION (Scale 1:100)



SITE PLAN (Scale 1:500)

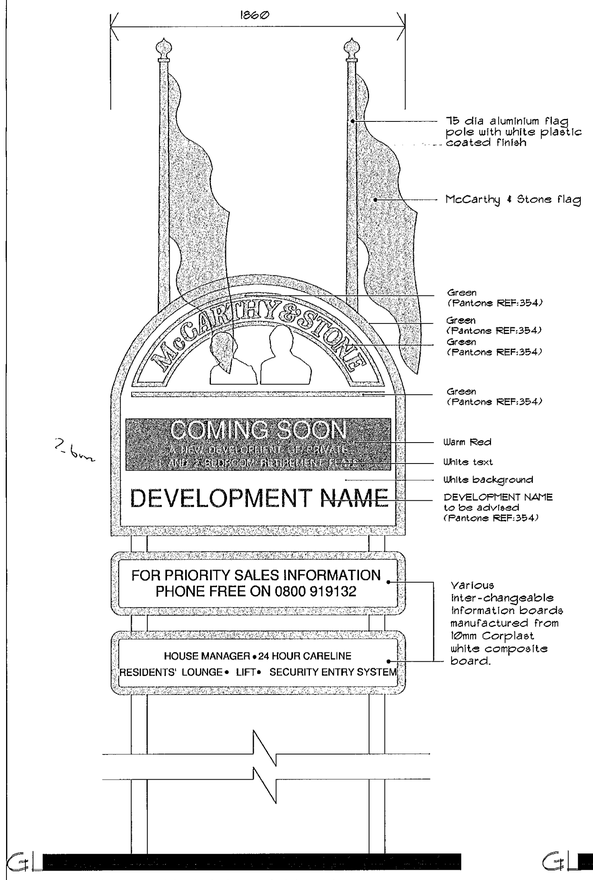

FRONT ELEVATION

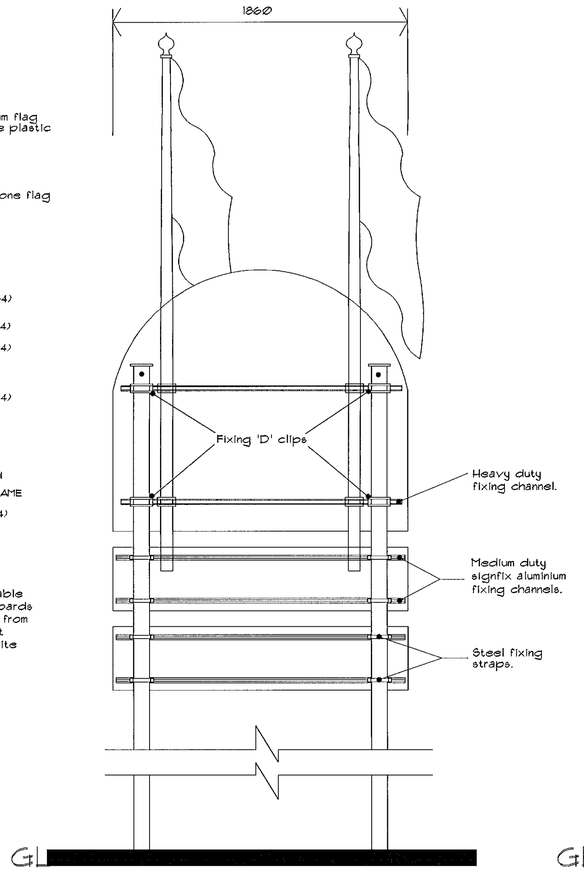

REAR ELEVATION

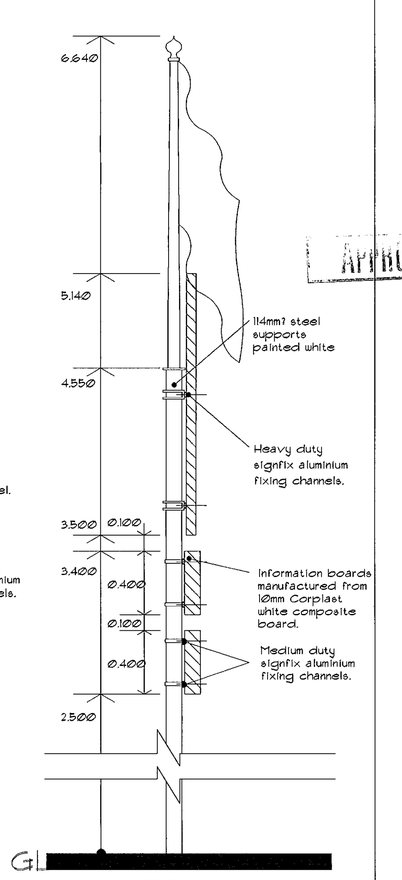

CROSS ELEVATION

PROPOSED SIGN DETAILS (Scale 1:20)

REVISIONS

Rev.	Date	By

07.FEB.2000* 0559

APPROVED

© Copyright of McCarthy & Stone (Developments) Ltd. Nov. 1997

ALL DIMENSIONS TO BE CHECKED ON SITE
WORK TO FIGURED DIMENSIONS ONLY
REPORT DISCREPANCIES TO THE REG ARCH
AT ONCE BEFORE PROCEEDING

THE PLANNING BUREAU LIMITED
Architects and Town Planners
Design Director
Andrew Oliver Dip.Arch RIBA
South Eastern Region
Emerald House, 30-38 High Road, Byfleet
Surrey, KT14 7QG.
Telephone: 01932-353211 Fax: 01932-336063

Client
McCARTHY & STONE
THE NATURAL CHOICE FOR A HAPPY RETIREMENT

Project Title
PROPOSED SHELTERED HOUSING
WALTHAM ROAD
TWYFORD
BERKSHIRE

Drawing Title
PROPOSED SIGN LOCATION & DETAILS

Scale	AS SHOWN	Date	3 Feb 2000
Drawn	MEL	Checked	
Drawing No.			Rev.

10/832/S10

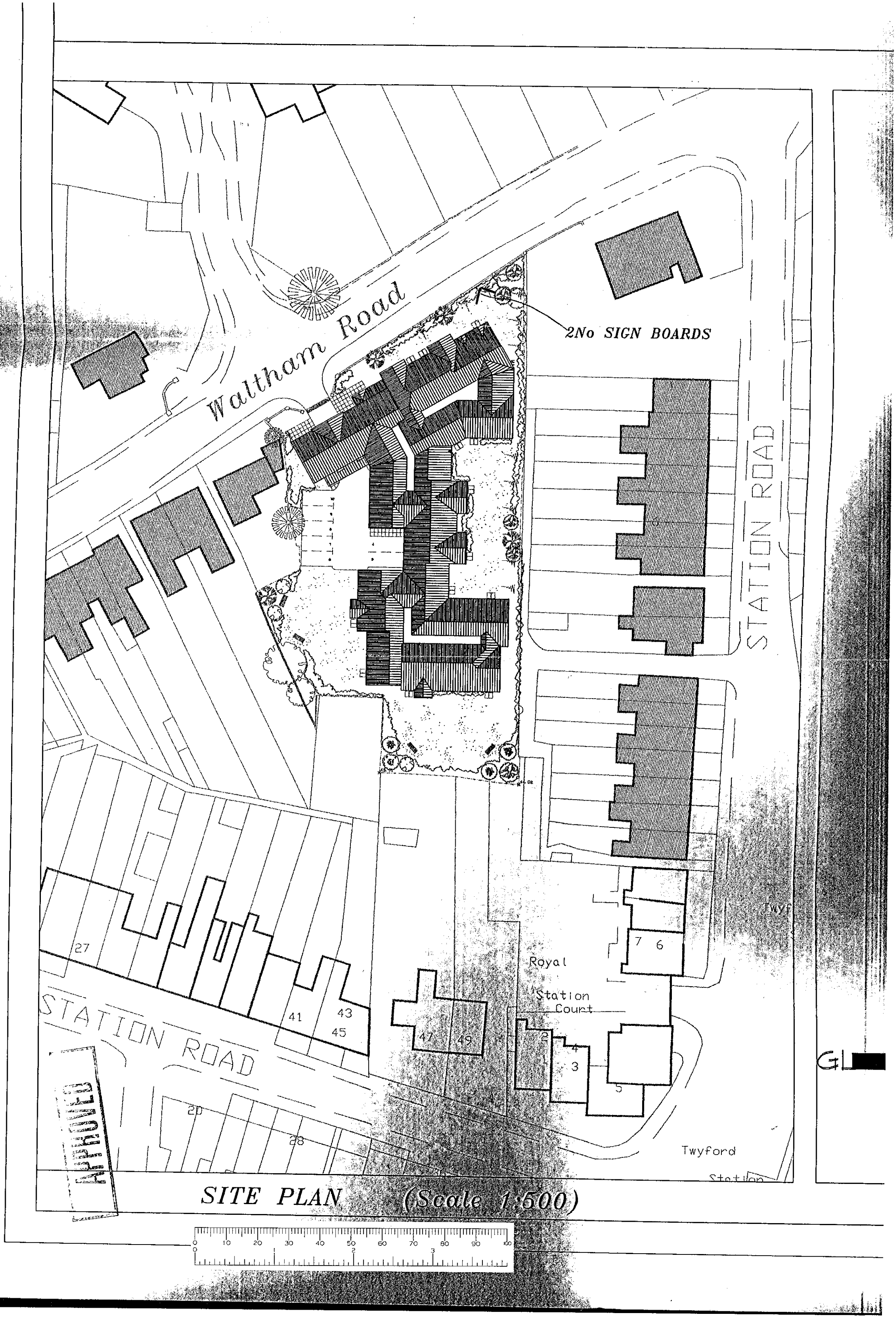

SITE PLAN (Scale 1:500)

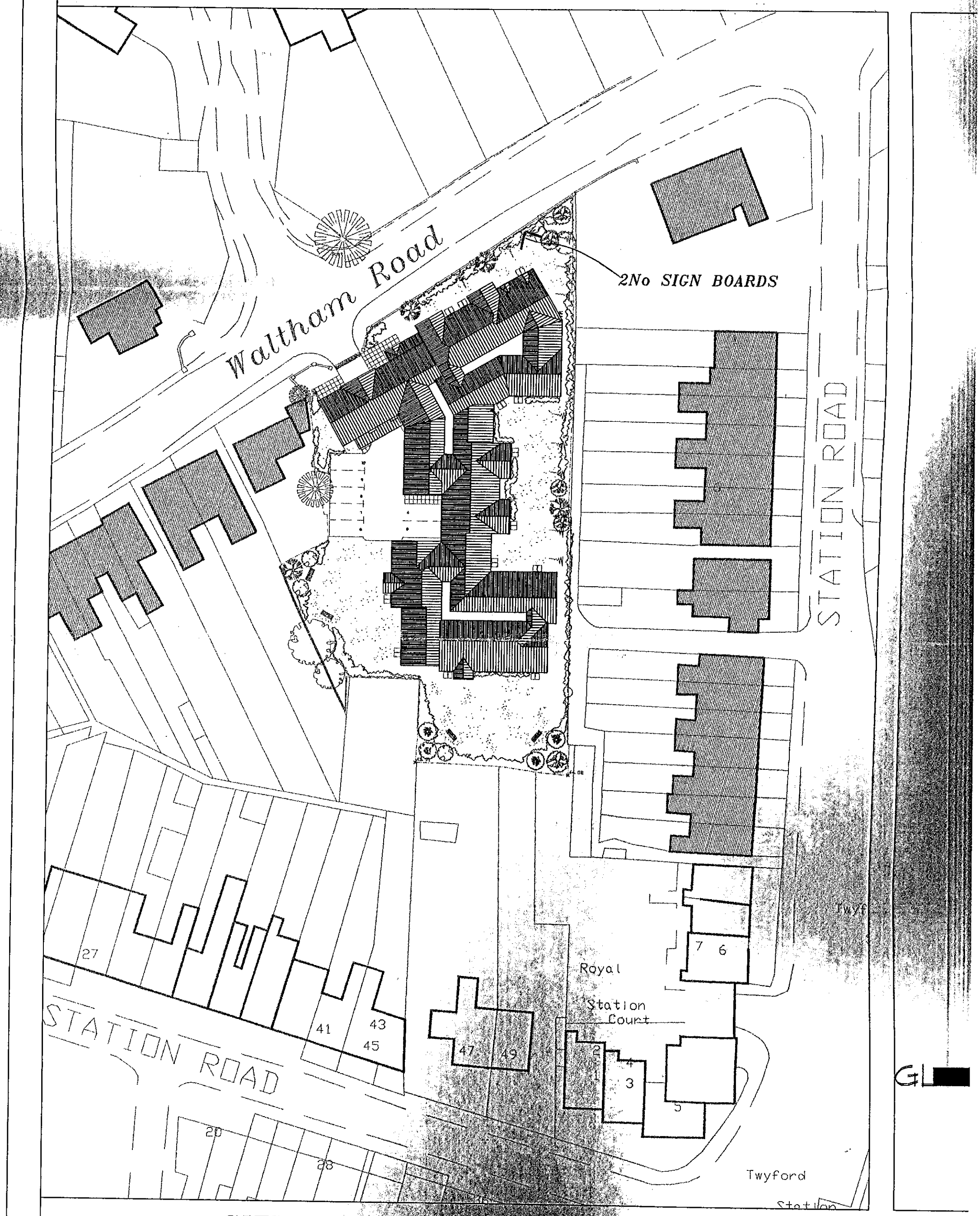

SITE PLAN (Scale 1:500)