MARK WELBY
CONSULTING ARBORISTS

Arboricultural Report

Including a tree survey, impact assessment and method statement for two replacement dwellings at

22a & 22b Barkahm Ride, Finchampstead, RG40 4EU

Reference: MW.2312.BRF.AIA
Client: Mr T Roberts
Date: 26 September 2024
Revision: B issued 07 July 2026

Mark Welby DipArb(RFS), TechCert(ArborA), FArborA
01730 239 492 | mark@mwelby.com | www.mwelby.com
M Welby Ltd, trading as Mark Welby Consulting Arborists
Hampshire, UK

AA Registered CONSULTANT trees.org.uk

Arboricultural ASSOCIATION Fellow Member

Executive Summary

Trees are a consideration in this planning application for two dwellings. Therefore, this report has been drafted to provide the information required to enable the local planning authority to meet the duty placed upon them by section 197 of the Town and Country Planning Act (as amended, 2021).

Included are a BS5837:2012 compliant tree survey, arboricultural impact assessment, and tree protection strategy that includes a method statement and tree protection plan.

Nine trees and groups are to be removed.

The new dwellings are located outside the root protection areas of retained trees so all can be adequately protected throughout the construction process.

Tree protection commitments include erecting barriers and a pre-start audit/meeting.

Provided the protection strategy is implemented as outlined, this application has a low arboricultural impact and is thus acceptable.

Table of Contents

1. Instructions and Terms of Reference 2
Documents Supplied 2
2. Statutory & Other Relevant Constraints 3
3. Existing Tree Population 3
Tree Population 3
Canopy Cover 3
Veteran & Ancient Trees 4
Survey Scope & Methodology 4
4. Arboricultural Impact Assessment 5
Proposal 5
Tree Removals 5
Tree Surgery 5
Demolition 5
Construction Impact 5
Supervision & Monitoring 5
Barrier Type 6
Service & Utility Provisions 6
Future Pressure 6
Summary 6
5. Arboricultural Method Statement 7
Phasing 7
Pre-start Confirmation 8
Construction Exclusion Zone (CEZ) 8
Protection Barriers 8
Ground Protection 9
Site Induction 10
Tree Surgery 10
Fencepost/Hoarding Installation in RPA 11
6. Limitations of Use and Copyright. 11
Appendix 12
i. Tree Protection Barriers 13
ii. Tree Categories Explained 15
iii. Protection Plan 16

1. Instructions and Terms of Reference

1.1. In December 2023, I was instructed by Mr T Roberts to undertake a tree survey and subsequently, in September 2024, to produce this report to accompany a planning application for two replacement dwellings at 22a & 22b Barkahm Ride, Finchampstead, RG40 4EU.

1.2. This revision (B) has been drafted in June 2026 to represent the latest layout.

1.3. Following the recommendations of the British Standard[1], this report includes the necessary information to enable the local planning authority to meet the duty placed upon them by section 197 of the Town and Country Planning Act (as amended, 2021).

1.4. It demonstrates that the proposal's impact, both direct and indirect, has been assessed, and mitigation, compensation, and tree protection have been proposed where appropriate.

1.5. Correctly implementing the tree protection specified in this report is critical for ensuring the retained trees are successfully protected throughout construction.

1.6. The assessment considers the proposal's impact on the constraints of trees retained within the site and those on adjacent land. Such impact can be caused directly through construction damage and indirectly from post-development resentment and pressure to detrimentally prune or remove the trees. The latter is often due to a poor juxtaposition between the proposal and the trees.

1.7. A tree's root protection area (RPA) represents a minimum area in m² that shall be left undisturbed around it. This is initially represented by a circle but is fundamentally an area of rooting volume. It is often adjusted to account for constraints to root growth within the site (primarily highways and buildings). The British Standard provides recommendations regarding the protection of existing trees during the construction process. This is achieved by implementing a tree protection strategy before any demolition or construction on site.

Documents Supplied

- Proposed: 22 BarkhamRide210525.dwg
- Site survey: 7848.dwg

[1]BS5837:2012 Trees in relation to design, demolition and construction

2. Statutory & Other Relevant Constraints

Local Planning Authority	Wokingham Borough Council
Tree Preservation Orders https://experience.arcgis.com/experience/	Yes
Conservation Areas https://experience.arcgis.com/experience/	No
Forestry Act (1967)	Applies to tree removals
Ancient Semi-Natural Woodland (ASNW) https://magic.defra.gov.uk/MagicMap.aspx	None
Ancient Tree Inventory https://ati.woodlandtrust.org.uk/tree-search/?v=	None present (see text)
Obvious veteran trees	None
Sites of special scientific interest (SSSI) https://magic.defra.gov.uk/MagicMap.aspx	No
Legal covenants and outstanding planning conditions	Not known
Bedrock: British Geological Survey: https://geologyviewer.bgs.ac.uk/?_ga=	Bagshot Formation - Sand
Soil: Landis SoilScape https://www.landis.org.uk/soilscapes/	Loamy soils with naturally high groundwater

Table: Constraints checked at the time of writing

3. Existing Tree Population

Tree Population

3.1. The tree population on the site is somewhat impoverished and individually of low and poor quality. Details of the tree population and their categories can be seen on the appended tree protection plan.

Canopy Cover

3.2. The existing canopy cover within the site equates to approximately

3.3. The Tree Equity Score[2] for this site is 100%.

3.4. Tree Equity Score UK combines information from a variety of sources to create a single measure from 0 to 100—the lower the score, the greater the need for investment in tree planting.

3.5. Tree Equity Score is available to most urban areas in the UK. The score sets a national standard in each UK country to help make the case for investment in areas with the greatest need

[2] https://uk.treeequityscore.org/

Veteran & Ancient Trees

3.6. Although several trees are listed on the Ancient Tree Inventory (see Table 1), at this time no trees are present on the site that could be classed as ancient or veteran.

Survey Scope & Methodology

3.7. Tree survey data can be found on the appended plan.

3.8. Details for 1no. off-site pine trees (#10) have been taken from the tree survey submitted as part of the outline application for the adjacent site (TGA Tree Consultants ref TGA.2504.TreeSurvey). The tree was inaccessible at the time of my survey, and thus, this publicly available information (WBC planning ref 241667) provides more clarity.

3.9. The tree survey has been carried out following the recommendations of The British Standard and the trees are assessed objectively and without reference to any site layout proposals. Categories are based on each tree's health and condition, together with an assessment of its life expectancy if its surroundings were to be unchanged.

3.10. The reference numbers of surveyed trees and groups of trees are shown on the tree reference plan, which is appended to this report and based on the supplied survey drawing. Stem locations within groups may be estimated, and indicative of canopy only.

3.11. The tree survey was carried out from ground level only, with the aid of binoculars as necessary, following the Visual Tree Assessment[3] (VTA) method.

3.12. Where trees are located on neighbouring land, an estimated appraisal of their quality and dimensions has been made.

3.13. Where stems or branches are obscured by ivy or other materials a full assessment of those parts will not be possible.

3.14. Tree heights were measured with a clinometer or estimated in relation to those measured.

3.15. Trunk diameters are measured at 1.5m above ground level, where this is not possible, then Figure C.1 of the British Standard is followed.

3.16. Tree canopies were markedly asymmetrical, and were measured (or estimated by pacing) in four directions using a laser measure. Symmetrical canopies are measured in one direction only, with dimensions in the remaining directions assumed to be similar. For the canopies of groups of trees, the maximum radius for each compass point is measured (more complicated groups will have further notes taken and an accurate representation will be shown on the plan).

3.17. All estimated dimensions are noted in the data.

[3] Mattheck, C. & Breloer, H., 1998. The Body Language of Trees: A Handbook for Failure Analysis. London:H.M.S.O.

4. Arboricultural Impact Assessment

Proposal

4.1. It is proposed to build two replacement dwellings on the site, the layout of which can be seen on the appended plan.

Tree Removals

4.2. Four trees—a cypress, holly, and hazel — are to be removed to facilitate the proposals (#02, 25, 26, 27, 28 & 29). All are of low quality (category C).

4.3. Regardless of this proposal, three additional trees will be removed as good practice (#01, 08 & 09). One is a dead stem, and one is an ash with ash dieback, and the last, a poor quality apple.

4.4. All these are listed on the appended tree protection plan.

Tree Surgery

4.5. There are no plans for any further tree surgery work at this stage.

Demolition

4.6. The existing storage containers on the eastern boundary are within root protection areas and must be removed before erecting the barriers. This will be done as an initial exercise before any main demolition. Following the removal from the CEZ area, the barriers will be erected as shown on the appended plan.

Construction Impact

4.7. The new dwellings and associated construction are located outside the root protection areas of all retained trees.

Supervision & Monitoring

4.8. Some sites require more arboricultural involvement during the construction process than others. This is typically commensurate with the pressure on retained trees and the complexity of the tree protection strategy.

4.9. Supervision of specialist tasks is not required on this project.

4.10. Regular monitoring visits would not be necessary for this project.

Barrier Type

4.11. As the proposed construction work is comparatively 'low impact', the default British Standard tree protection specification seems somewhat onerous. Therefore, it is my opinion that an adequate level of protection can be provided with a lesser specification.

4.12. Alternative specifications can be found in Appendix i. TPF 2 or TPF 3 are proposed.

Service & Utility Provisions

4.13. There is adequate space to service the site whilst avoiding all RPAs.

Future Pressure

4.14. It can be seen from the appended plan that there is sufficient offset from the trees to provide some open space around the dwelling and allow construction without impact.

4.15. I have worked with the design team to achieve the subject layout and am confident that the proposed dwelling locations maximise the available space whilst not resulting in situations where excessive shade might bring forth requests to heavily prune or remove the retained trees.

Summary

4.16. Provided the tree protection strategy is implemented as outlined in the following method statement, this application has a low arboricultural impact and is thus acceptable.

5. Arboricultural Method Statement

5.1. The tree protection on this site is subject to implementation as detailed in the following sections.

5.2. The recommendations of the British Standard have been applied where viable. Where deviations from the preferred approach are required, the impact on any retained trees is minimised through a combination of supervision from an arboriculturist and adherence to the associated method statement.

5.3. Once permission is granted, the strategy must be followed to avoid impacting the trees and adhere to any planning conditions.

5.4. The information within this section must be passed to the site foreman and cascaded to all relevant personnel involved in the project.

5.5. Any questions about the content or its implementation shall be directed to **Mark Welby Consulting Arborists at 01730 239492** before action is taken.

5.6. A tree protection plan showing the types of tree protection and their locations is appended. It includes the tree survey data, existing site features and the approved construction. The plan must be read in conjunction with this method statement.

Phasing

5.7. It is essential that the following phasing is followed if trees are to be effectively protected throughout construction.

1	Tree removals & surgery
2	Removal of storage containers from within RPAs
3	Installation of protection barriers (Appendix i: TPF 2 or 3)
4	Confirmation that tree protection barriers are installed to be sent to LPA
5	Demolition & site clearance phase
6	Construction Phase
7	Removal of tree protection barriers upon completion of work

Table 2: Timing of operations in relation to trees

5.9. Shall any of the protection measures prove incompatible with elements of the build program, contact the project arboriculturist to discuss options.

Pre-start Confirmation

5.10. The most important step in the tree protection process: confirmation that the tree protection barriers are in place must be forwarded to the LPA before any external work starts. This may be a photographic record sent via email.

Construction Exclusion Zone (CEZ)

5.11. The CEZ is a root-sensitive area where construction activities are to be excluded. The default method of doing so is through the installation of tree protection barriers. If construction access is required in the CEZ then ground protection can be used to facilitate this.

5.12. Everyone engaged in the construction process is responsible for respecting the tree protection measures and observing the necessary precautions within and adjacent to them.

5.13. Inside the exclusion zone, the following shall apply:

- No mechanical excavation whatsoever;
- No excavation by any other means without arboricultural site supervision;
- No hand digging without a written method statement having first been approved by the project arboriculturist;
- No lowering of levels for any purpose (except removal of grass sward using hand tools);
- No storage of plant or materials;
- No storage or handling of any chemical including cement washings;
- No vehicular access (unless ground protection is installed);
- No fire lighting.

5.14. In addition to the above, further precautions are necessary adjacent to trees:

- No substances injurious to tree health, including fuels, oil, bitumen, cement (including cement washings), builder's sand, concrete mixing and other chemicals shall be stored or used within or directly adjacent to the protection area of retained trees;
- No fire shall be lit such that flames come within 5m of tree foliage.

5.15. Variations from the above may be specified in the following sections of this method statement. This is only acceptable where detailed and will typically be subject to supervision by the arboriculturist.

Protection Barriers

5.16. Barriers must be fit to exclude construction activity and appropriate to the degree and proximity of work around the retained tree(s). Barriers shall be maintained to ensure that they remain rigid and complete.

5.17. See Appendix *i* for barrier specifications.

5.18. On this project, types TPF 2 or TPF 3 are to be used.

Ground Protection

5.19. If required to facilitate access within the CEZ (or as shown on the appended tree protection plan), ground protection is to be installed. If not already included on the tree protection plan, it must be approved in writing by the local planning authority before implementation. The ground protection must be capable of supporting the expected loads and avoiding rutting, compaction and damage to the soil: as advised in section 6.2.3 of the British Standard.

GP1: Tree protection barriers and scaffold ground protection

GP2: Tree protection barriers & trackmat ground protection

5.20. Stages of ground protection installation:

1. If required, dismantle barriers and re-erect them to protect any newly exposed CEZ not to be covered by ground protection;
2. Any shrubs, saplings or trees to be removed, are to be cut or ground out to just below ground level rather than grubbed or winched out, which can damage the roots of retained trees;
3. Lay woven geotextile over the existing ground surface by hand;
4. Cover the area with a compressible layer (200mm of woodchip, for example), using hand tools only;
5. Cover compressible layer with side butting scaffold boards, plywood boards of proprietary trackway/trackmats;
6. Confirm surface is acceptable for use with the project arboriculturist;
7. Area ready for construction access;
8. Any scaffolding required within the area will be erected with the uprights placed on spreader boards;
9. The boarding will be left in place until the construction works are finished.

5.21. A single thickness of boarding laid on the soil surface will provide sufficient protection for pedestrian loads. However, for wheeled or tracked construction traffic movements within the RPA, ground protection will involve the use of temporary geocell/cellular confinement systems, reinforced concrete slabs or track-board systems details of which are to be specified by the project engineer and approved for use by the project arboriculturist and local authority before construction commences.

5.22. Track-boards can be sourced from Trakmats, 0800 622 6838, www.trakmats.co.uk, or GroundGuards, 0113 209 3685, www.ground-guards.co.uk.

5.23. There is to be no excavation within the ground protection area whatsoever. This includes the installation of services and associated utilities, without prior approval.

Site Induction

5.24. All site staff are to be briefed on the tree protection strategy for the site as part of the general site induction procedure. This can be carried out by the site manager once he has been briefed by the project arboriculturist.

5.25. In general, this will include the following:

1. Explanation of the purpose of the tree protection barriers and any ground protection
2. Explanation of the demolition procedures near trees
3. Explanation of the sensitive/supervised excavation areas
4. What to do if access is needed within a protected area for any reason
5. What to do if damage occurs to any tree protection barriers and how to contact the project arboriculturist if necessary.

Tree Surgery

5.26. Tree surgery to achieve visibility displays is required for two trees. This work is listed in the schedule on the appended plan.

5.27. All work will be carried out under BS3998[4] industry best practice and in line with any works already agreed upon with the council.

5.28. The statutory protection[5] [6] will be adhered to. If further advice is required, particularly if bats are discovered during tree work, it will be obtained from Natural England or other competent persons and recommendations adhered to.

---

[4] *BS3998:2010- Recommendations for Tree Work.* London: British Standards Institute

[5] *Wildlife and Countryside Act.* (1981) London: HMSO.

[6] *Conservation of Habitats and Species Regulations (2017)* London: HMSO.

5.29. The stumps of any trees removed from within the Construction Exclusion Zone or the RPAs of retained trees will be either cut flush to ground level and left in situ or ground out using a stump grinder. They will not be winched out.

5.30. All operations shall be carefully carried out to avoid damage to the trees being treated or neighbouring trees. No trees to be retained shall be used for anchorage or winching purposes.

Fencepost/Hoarding Installation in RPA

5.31. Stages for installing wooden posts:

No plant machinery is to be used in the area for whatever reason

1. Remove TPF to allow access to the area. If working inside the tree's RPA, ground protection boarding must be used to avoid compaction and contamination of the root zone.
2. Dig postholes using hand tools, avoiding damage to the protective bark covering larger roots. Roots smaller than 25mm in diameter may be pruned back using either secateurs or a hand saw, leaving a clean cut.
3. Damage or severance of roots above 25mm diameter must be avoided. If roots of this size are discovered, the hole shall be relocated. If there are a large number of such roots it may be necessary to relocate the hole by half a fence panels length and adjust the fence panels accordingly.
4. Line holes with non-porous lining, for example, a durable polyethene bag.
5. Insert post and fill post-hole with concrete to just below ground level.
6. Trim polyethene to ground level and fill with clean topsoil.
7. Reinstall TPF as approved.

6. Limitations of Use and Copyright.

Copyright M Welby Ltd trading as Mark Welby Consulting Arborists. All rights reserved.

No part of this report may be copied or reproduced by any means without prior written permission from M Welby Ltd. If you have received this report in error, please destroy all copies in your possession or control and notify M Welby Ltd. This report has been prepared for the exclusive use of the commissioning party and unless otherwise agreed in writing by M Welby Ltd, no other party may use, make use of or rely on the contents of the report. No liability is accepted by M Welby Ltd for any use of this report, other than for the purposes for which it was originally prepared and provided. Opinions and information provided in the report are based on M Welby Ltd using due skill, care and diligence in the preparation of the same and no explicit warranty is provided as to their accuracy. It shall be noted, and it is expressly stated that no independent verification of any of the documents or information supplied to M Welby Ltd. has been made.

Appendix

i. Tree Protection Barriers

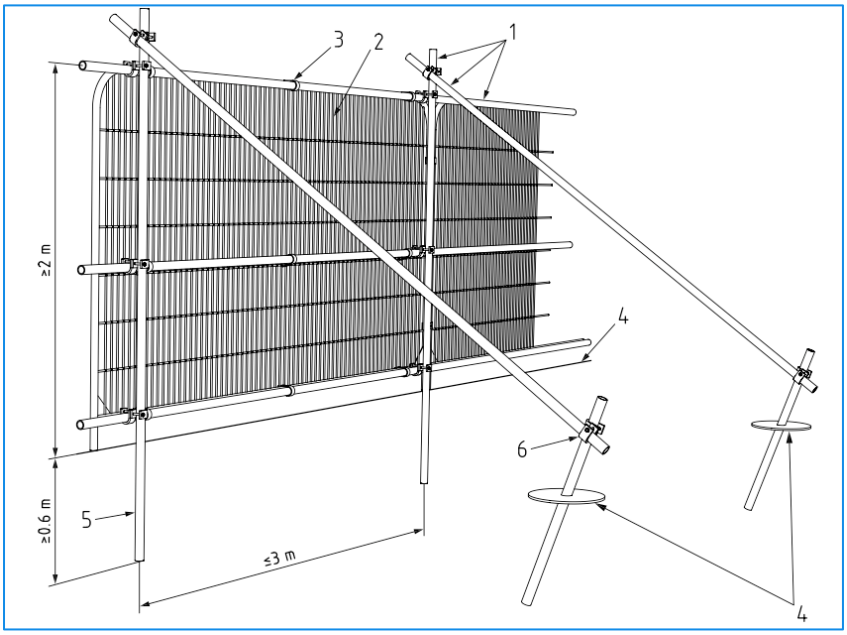

1 Standard scaffold poles

2 Heavy gauge 2 m tall galvanised tube and welded mesh infill panels

3 panels secured to up rights and cross members with wire-ties

4 ground level

5 uprights driven into the ground until secure (minimum depth 0.6 m)

6 Standard scaffold clamps

TPF1: Default specification for protective barrier (Fig 2 from BS5837:2012)

TPF 2: Alternative fencing option: scaffold uprights with backstay

TPF 3:Alternative fencing option: on boots with backstay

TPF 4: Plastic barrier for low intensity areas of construction

TPF 5: Chain-link for low intensity areas on large projects

ii. Tree Categories Explained

BS5837:2012 Table 1 -**Cascade chart for tree quality assessment**			
Category and definition	**Criteria (including subcategories where appropriate)**		
Trees unsuitable for retention (see Note)			
Category U Those in such a condition that they cannot realistically be retained as living trees in the context of the current land use for longer than 10 years	*Trees that have a serious, irremediable, structural defect, such that their early loss is expected due to collapse, including those that will become unviable after removal of other category U trees (e.g. where, for whatever reason, the loss of companion shelter cannot be mitigated by pruning) *Trees that are dead or are showing signs of significant, immediate, and irreversible overall decline *Trees infected with pathogens of significance to the health and/or safety of other trees nearby, or very low quality trees suppressing adjacent trees of better quality *NOTE Category U trees can have existing or potential conservation value which it might be desirable to preserve; see **4.5.7.***		
	1 Mainly arboricultural qualities	**2 Mainly landscape qualities**	**3 Mainly cultural values, including conservation**
Trees to be considered for retention			
Category A **Trees of high quality** with an estimated remaining life expectancy of at least 40 years	Trees that are particularly good examples of their species, especially if rare or unusual; or those that are essential components of groups or formal or semi-formal arboricultural features (e.g. the dominant and/or principal trees within an avenue)	Trees, groups or woodlands of particular visual importance as arboricultural and/or landscape features	Trees, groups or woodlands of significant conservation, historical, commemorative or other value (e.g. veteran trees or wood-pasture)
Category B **Trees of moderate quality** with an estimated remaining life expectancy of at least 20 years	Trees that might be included in category A, but are downgraded because of impaired condition (e.g. presence of significant though remediable defects, including unsympathetic past management and storm damage), such that they are unlikely to be suitable for retention for beyond 40 years; or trees lacking the special quality necessary to merit the category A designation	Trees present in numbers, usually growing as groups or woodlands, such that they attract a higher collective rating than they might as individuals; or trees occurring as collectives but situated so as to make little visual contribution to the wider locality	Trees with material conservation or other cultural value
Category C **Trees of low quality** with an estimated remaining life expectancy of at least 10 years, or young trees with a stem diameter below 150mm	Unremarkable trees of very limited merit or such impaired condition that they do not qualify in higher categories	Trees present in groups or woodlands, but without this conferring on them significantly greater collective landscape value; and/or trees offering low or only temporary/transient landscape benefits	Trees with no material conservation or other cultural value

iii. Protection Plan

See the following page

BS5837 Tree Survey: Trees & Groups to be Retained

Retained Trees / Groups

Ref	Species	Common Name	Height	Stem Diameter	Canopy NESW	Crown Clearance	Age Class	Observations	Tree Surgery	Est. Remaining Contribution	Date Surveyed	No.	BS Cat
03	Ilex aquifolium	Common Holly	4.5m	150mm; 150mm; 150mm	2 N 1 E 1 S 3.5 W	2m	Mature	Leaving stem. Heavily ivy clad. Within falling distance of utility cables and highway		0 Years	11/12/2023	1	U
04	Corylus avellana	Hazel	6m	100#mm; 100#mm; 100#mm; 100#mm; 100#mm; 100#mm; 100#mm; 100#mm; 100#mm; 100#mm; 100#mm	5 N 5 E 5 S 5 W	1.5m	Mature	Typical coppice stool		10 Years	11/12/2023	1	C2
05	Betula pendula	Silver Birch	12m	220#mm; 220#mm; 220#mm; 220#mm	4 N 5 E 4 S 5 W	4m	Mature	Limited long-term value. Ivy clad.		10 Years	11/12/2023	1	C1
06	Betula pendula	Silver Birch	13m	300#mm	4 N 4 E 4 S 4 W	2m	Mature	Extensive cavity on lower stem to 3 m with associated exudation s		0 Years	11/12/2023	1	U
07	Ilex aquifolium	Common Holly	6m	160#mm; 160#mm	2.5 N 2.5 E 2.5 S 2.5 W		Mature	Fair overall physiological and structural condition. Provides a screen		10 Years	11/12/2023	1	C2
10	Pinus nigra	Black Pine	18m	850mm	6 N 6 E 6 S 6 W	4m	Mature	Off site and inaccessible. Location estimated. Damage to bark at stem base such that the tree is ringbarked (TGA tree survey for 24 Barkham Ride outline application 241667)		<10 Years	11/12/2023	1	U
11	Acer platanoides	Norway Maple	10m	300#mm	3 N 3 E 3 S 3 W	2.5m	Early-Mature	Self-seeded. Ivy on stem. Inaccessible.		10 Years	11/12/2023	1	C1
12	Not identified	Not identified	9m	400#mm			Mature	Ivy clad stem. No foliage		0 Years	11/12/2023	1	U
13	Betula pendula	Silver Birch	7m	280mm; 250mm	3.5 N 3.5 E 3.5 S 3.5 W		Mature	Limited long-term value. Close to barn. Secondary stem contorted. Ivy.		10 Years	11/12/2023	1	C1
14	Fraxinus excelsior	Common Ash	5.5m	100mm	2.5 N 2.5 E 2 S 2 W	2m	Young	Seedling.		10 Years	11/12/2023	1	C1
15	Corylus avellana	Hazel	4m	400mm	3 N 3 E 3 S 3 W	1.5m	Mature	Typical coppice form		10 Years	11/12/2023	1	C1
16	Corylus avellana	Hazel	4m	400mm	2 N 2 E 2 S 2 W	1.5m	Mature	Typical coppice form. Ivy		10 Years	11/12/2023	1	C1
17	Ulmus sp.	Elm	6m	170mm	2.5 N 2.5 E 2 S 2.5 W	2m	Early-Mature	Standing dead		0 Years	11/12/2023	1	U
18	Prunus laurocerasus	Laurel Cherry	4m	100mm; 100mm	2 N 2 E 2 S 2 W	2m	Early-Mature	Boundary screen		10 Years	11/12/2023	1	C2
19	Corylus avellana	Hazel	4m	400mm	3 N 3 E 3 S 3 W	1.5m	Mature	Typical coppice form		10 Years	11/12/2023	1	C1
20	Corylus avellana	Hazel	4m	700mm	3 N 3 E 3 S 3 W	1.5m	Mature	Typical coppice form		10 Years	11/12/2023	1	C1
21	Chamaecyparis lawsoniana	Lawson Cypress	9m	270#mm	2 N 2 E 2 S 2 W		Early-Mature	Off-site and inaccessible.		10 Years	11/12/2023	1	C1
22	Ilex aquifolium	Common Holly	7m	200mm; 200mm; 200mm; 200mm; 200mm	2.5 N 2.5 E 2.5 S 2.5 W		Mature	Fair quality. Group of stems.		10 Years	11/12/2023	1	C1
23	Corylus avellana	Hazel	4m	400mm	3 N 3 E 3 S 3 W	1.5m	Mature	Typical coppice form		10 Years	11/12/2023	1	C1
24	Corylus avellana	Hazel	4m	600mm	3 N 3 E 3 S 3 W	1.5m	Mature	Typical coppice form		10 Years	11/12/2023	1	C1
												Total :20	

Trees & Groups for Removal

Removed Trees / Groups

Ref	Species	Common Name	Height	Stem Diameter	Canopy NESW	Crown Clearance	Age Class	Observations	Est. Remaining Contribution	Date Surveyed	No.	BS Cat
01	Chamaecyparis lawsoniana	Lawson Cypress	9m	350mm	0.5 N 0.5 E 0.5 S 0.5 W	5m	Mature	Stem only	0 Years	11/12/2023	1	U
02	Chamaecyparis lawsoniana	Lawson Cypress	11m	250#mm	2.5 N 2.5 E 2.5 S 2.5 W	1.5m	Mature	Group of three stems. Limited quality and value	10 Years	11/12/2023	1	C2
08	Fraxinus excelsior	Common Ash	11m	450#mm	6 N 6 E 6 S 6 W	2m	Mature	Limited long-term value due to ash dieback. Deadwood and reduced fine branch reiteration	0 Years	11/12/2023	1	U
09	Malus sp.	Apple	6m	350#mm	3 N 3 E 3 S 3 W	1m	Mature	Standing dead	0 Years	11/12/2023	1	U
25	Corylus avellana	Hazel	4m	300mm	4 N 2 E 4 S 2 W	1.5m	Mature	Typical coppice form	10 Years	11/12/2023	1	C1
26	Corylus avellana	Hazel	4m	400mm	3 N 2 E 2 S 2 W	1.5m	Mature	Typical coppice form	10 Years	11/12/2023	1	C1
27	Ilex aquifolium	Common Holly	3.5m	150#mm	2 N 2 E 2 S 2 W	1m	Early-Mature	Small and inconsequential	10 Years	11/12/2023	1	C2
28	Ilex aquifolium	Common Holly	9m	300#mm; 300#mm; 300#mm	4 N 4 E 4 S 4 W		Mature	Mature roadside specimen. Potential to provide screen if retained. Poorly located in relation to utility cables.	10 Years	11/12/2023	1	C2
29	Corylus avellana	Hazel	8m	200mm; 200mm; 200mm; 200mm; 200mm; 200mm	5 N 5 E 5 S 5 W	2m	Mature	Inaccessible. Dimensions estimated. Limited wider value.	10 Years	11/12/2023	1	C1
											Total :9	

1:200					
0	4	8	12	16	20

REV:	DATE:	UPDATES:	DRAWN:
A	22.01.2026	Revised layout	MW
B	07.07.2026	Revised layout	MW

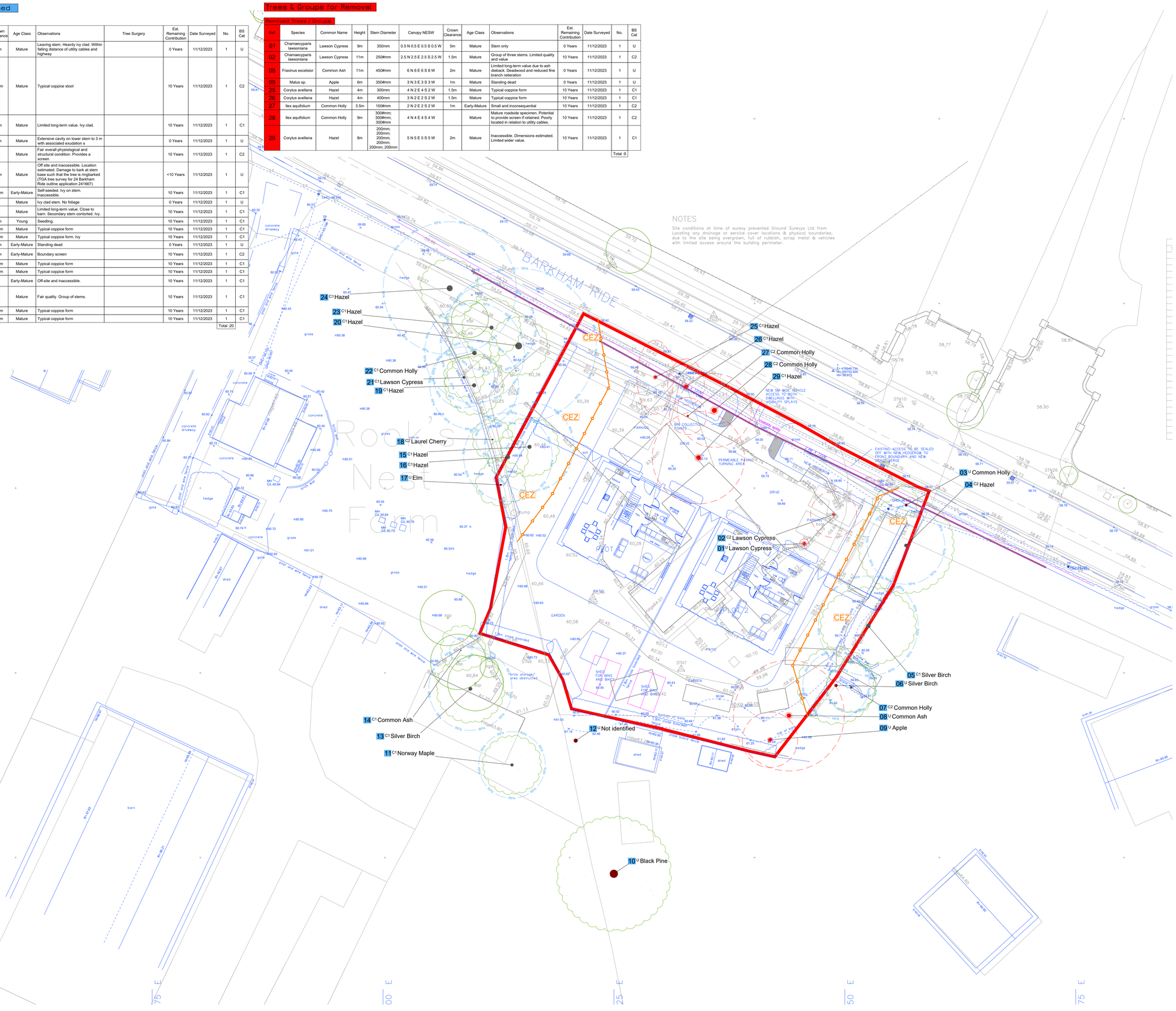

Survey by Mark Welby DipArb(RFS), TechCert(ArboA), FArboA
Arboricultural Association Registered Consultant
www.mwelby.com

# denotes estimated dimension. Typically due to the tree being inaccessible.
Where dimensions are not listed please refer to the plan graphics for an indicative representation (typically for groups).

Construction Exclusion Zone

It is the responsibility of everyone engaged in the construction process to respect the tree protection measures and observe the necessary precautions within and adjacent to them.

Inside the exclusion zone, the following shall apply:

- No mechanical excavation whatsoever;
- No excavation by any other means without arboricultural site supervision;
- No hand digging without a written method statement having first been approved by the project arboriculturist;
- No lowering of levels for any purpose (except removal of grass sward using hand tools);
- No storage of plant or materials;
- No storage or handling of any chemical including cement washings;
- No vehicular access;
- No fire lighting.

In addition to the above, further precautions are necessary adjacent to trees:

- No substances injurious to tree health, including fuels, oil, bitumen, cement (including cement washings), builder's sand, concrete mixing and other chemicals shall be stored or used within or directly adjacent to the protection area of retained trees;
- No fire shall be lit such that flames come within 5m of tree foliage.

All weather signs shall be erected at reasonable intervals on the barriers. See example inset

Default specification for protective barrier

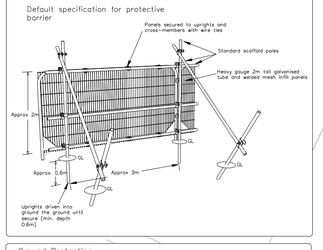

Ground Protection

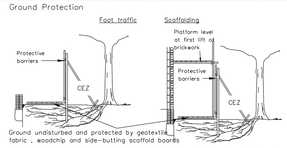

Ground undisturbed and protected by geotextile fabric , woodchip and side-butting scaffold boards

For pedestrian movements only, a single thickness of scaffold boards should be placed either on top of a driven scaffold frame, so as to form a suspended walkway, or on top of a compression-resistant layer (e.g. 100 mm depth of woodchip), laid onto a geotextile.

For pedestrian operated plant up to a gross weight of 2 t, proprietary, inter-linked ground protection boards should be placed on top of a compression-resistant layer (e.g. 150 mm depth of woodchip), laid onto a geotextile.

For wheeled or tracked construction traffic exceeding 2 t gross weight, an alternative system (e.g. pre-cast reinforced concrete slabs) should be employed to an engineering specification designed in conjunction with arboricultural advice to accommodate the likely loading to which it will be subjected.

NOTES

This Tree Survey has been undertaken within the recommendations of British Standards 5837:2012 and current arboricultural best practice.

- The reference numbers of surveyed trees and groups of trees are shown. Stem locations within groups may be estimated, and indicative of canopy only.
- The tree survey was carried out from ground level only, with the aid of binoculars as necessary, following the Visual Tree Assessment (VTA) method.
- Where trees are located on neighbouring land an estimated appraisal has been made of their quality and dimensions.
- Where stems or branches are obscured by ivy or other materials a full assessment of those parts will not be possible.
- Height dimensions are estimated and are given in metres.
- Trunk/stem diameters are measured in mm at 1.5 metres above ground level, unless otherwise stated. Where this is not possible, then Figure C.1 of the British Standard is followed.
- Tree canopies, where markedly asymmetrical, were measured (or estimated by pacing) in four directions using a laser measure. Symmetrical canopies are measured in one direction only, with dimensions in the remaining directions assumed to be similar. For the canopies of groups of trees, the maximum radius for each compass point is measured (more complicated groups will have further notes taken and an accurate representation will be shown on the plan).

Base plan/site survey reference: 7848.dwg

Statutory Tree Protection
Tree Protection Orders: Yes. Area Order. See Report.

Conservation Area: NO

Felling licence: Garden areas are exempt.

Guidance on the implementation and use of this information, along with its limitations and more can be downloaded here: http://bit.ly/BSGuidance

This plan has been drafted in colour. A monochrome version must not be relied upon

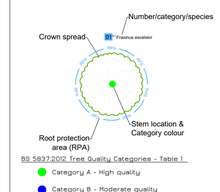

BS 5837:2012 Tree Quality Categories - Table 1

- Category A - High quality
- Category B - Moderate quality
- Category C - Low quality
- Category U - Unsuitable for retention

CEZ — Construction Exclusion Zone (CEZ)

CEZ extent. To be protected with temporary protective barriers or ground protection to allow construction access. See insets and method statement for details.

Tree to be removed

Tree Protection

22a & 22b Barkahm Ride,
Finchampstead,
RG40 4EU

Date:	Scale:
26/09/2024	1:200 @A1

DWG Ref: MW.2312.BRF.TPPRevB

MARK WELBY
CONSULTING ARBORIST
Mark Welby
DipArb(RFS), TechCert(ArboA), FArboA
Arboricultural Association Registered Consultant
07730 239 492 | mark@mwelby.com
www.mwelby.com
M Welby Ltd. | Hampshire | UK