SYSTEMS LTD
SOUTHPORT U.K.
LONDON OFFICE

APPLICATION NO:
F/2000/3036

LOCATION:
Roman Road Service Station Basingstoke Road, Spencers Wood Reading.

APPLICANT:
BP Oil Uk Ltd

PROPOSAL:
Proposed installation of jet wash facility with flood lighting.

EARLIEST DATE FOR DECISION: **21/01/2001**

APPLICATION WILL HAVE EXPIRED ON: 12/02/2001

CASE OFFICER: **Elaine Connor**

(EC)

WOKINGHAM DISTRICT COUNCIL

TOWN AND COUNTRY PLANNING ACTS

Notification of Approval of Permission

BP Oil Uk Ltd
500 – 600 Witan Gate
Milton Keynes
Bucks
MK9 1ES

Application Number: F/2000/3036

Parish:	**SHINFIELD**
Location:	**Roman Road Service Station, Basingstoke Road, Spencers Wood, Reading.**
Proposal:	**Proposed installation of jet wash facility with flood lighting.**

The Wokingham District Council in pursuance of their powers under the above Acts and Regulations hereby **Approve Permission** for carrying out the above development in accordance with the application and the accompanying plans submitted to the Council subject to compliance with the following conditions, the reasons for which are specified hereunder.

Condition
1. The development hereby permitted shall be begun before the expiration of five years from the date of this permission.

Condition
2. No development shall be commenced until a noise assessment in accordance with BS4142 1997 is carried out for the development. Resulting from this assessment a scheme shall be submitted to protect dwellings and gardens/private amenity within the vicinity of the proposed development from the noise generated by the operation of the jet wash system. No development shall commence until the Local Planning Authority has approved the scheme in writing. All works that form part of the approved scheme shall be completed before the use hereby approved is commenced. The approved scheme shall be retained and maintained for the duration of the use.

Condition
3. All car washers and jet washers, including flood lighting, shall only be operated between the hours of 0730 and 2200 Monday to Saturday and between 0930 and 1800 on Sundays, Bank Holidays and Public Holidays.

Reason
1. In pursuance of Section 91(1) of the Town and Country Planning Act 1990.

Reason
2. To protect the adjoining occupiers and area generally from noise and disturbance.

Reason
3. To protect the adjoining occupiers and area generally from noise and disturbance.

Informative
1. You are advised, in compliance with The Town and Country Planning (General Development Procedure) (England) (Amendment) Order 2000, that the following policies and/or proposals in the development plan are relevant to this decision:

Berkshire Structure Plan Policy OS1.

Loddon Area Local Plan Policy LTV1.

Deposit Draft Wokingham District Local Plan Policies WOS2 and WOS3.

John Mitchell
Development Control Manager
Date: 03/04/2001

Notice checked by: _____

If this notice grants permission to proceed with the proposal the applicant is reminded that it relates to planning permission only and does not constitute approval under any other legislation including Building Regulations.

Received by Wokingham District Council

Application No: F/2000/3036

Proposal:
Proposed installation of jet wash facility with flood lighting.

Location:
Roman Road Service Station, Basingstoke Road, Spencers Wood, Reading.

The application is available for inspection at Wokingham District Council's offices during the following times:

PLANNING DEPARTMENT, SHUTE END, WOKINGHAM TEL (0118) 974 6428
8.30 - 5.00 Monday - Thursday & 8.30 - 4.00 Friday

WOODLEY LIBRARY HEADLEY ROAD WOODLEY (9.30am - 7.00pm Mon, Thurs & Fri. 9.30am - 5.00pm Tues, 9.30am - 1.00pm Saturday. closed all day Wednesday). If you intend to view this application at Woodley Library (see details above) please allow 4 days from the date of this notice for delivery of plans.

Comments should be sent in writing QUOTING THE APPLICATION NUMBER to the Case Officer Elaine Connor P.O. Box 157 Council Offices, Shute End, Wokingham Berkshire, RG40 1WR to arrive on or before 21/01/2001. Written comments submitted will become available for public inspection.

In view of the very large number of planning applications and letters of comment received, it will not normally be possible for an individual reply to observations made. However any comments will be taken into account when the application is determined and you will be notified of the decision.

Head Planning and Transportation

28 December 2000

Tel: (0118) 974 6451

Date: 19/3/01

My ref: F/2000/3036

CONFIDENTIAL

Councillor M Bryant
Rosebry
19 Salmond Road
Shinfield
RG2 8QN

Environmental Services Department
Planning Services
P.O. Box 157
Shute End, Wokingham
Berkshire RG40 1WR
Tel: (0118) 974 6000
Fax: (0118) 974 6484
Minicom No: (0118) 974 6991
DX: 33506 – Wokingham

Dear Councillor

Application Number: F/2000/3036
Roman Road Service Station, Basingstoke Road, Spencers Wood, Reading.
Proposed installation of jet wash facility with flood lighting.

I write to let you know that the above mentioned application has been recommended for APPROVAL: ☑ REFUSAL: ☐ under delegated powers.

If you have any questions please do not hesitate to contact **Elaine Connor** on **(0118) 974 6451**. If you then feel the application needs to be transferred to the next available Development Control Committee for decision please fill in the form below.
This form must be received no later than 29/3/01

Yours faithfully

John Mitchell
Development Control Manager

LISTING FORM

Case officer: **Elaine Connor** Application Number: **F/2000/3036**
Roman Road Service Station, Basingstoke Road, Spencers Wood, Reading.
Proposed installation of jet wash facility with flood lighting.

Transfer: Yes ☐ No ☐
Reason for Transfer:

_____

_____

Signed: _____ Date: _____

Councillor M Bryant

NB. It would be helpful for speedy decision making if you could respond, even if you do not wish this application to be transferred.

Tel: (0118) 974 6451

Date: 19/3/01

My ref: F/2000/3036

CONFIDENTIAL

Councillor A Pollock
8 Halfacre Close
Spencers Wood
Reading
RG7 1DZ

Environmental Services Department
Planning Services
P.O. Box 157
Shute End, Wokingham
Berkshire RG40 1WR
Tel: (0118) 974 6000
Fax: (0118) 974 6484
Minicom No: (0118) 974 6991
DX: 33506 – Wokingham

Dear Councillor

Application Number: F/2000/3036
Roman Road Service Station, Basingstoke Road, Spencers Wood, Reading.
Proposed installation of jet wash facility with flood lighting.

I write to let you know that the above mentioned application has been recommended for APPROVAL: ☑ REFUSAL: ☐ under delegated powers.

If you have any questions please do not hesitate to contact **Elaine Connor** on **(0118) 974 6451**. If you then feel the application needs to be transferred to the next available Development Control Committee for decision please fill in the form below.
This form must be received no later than 29/3/01

Yours faithfully

John Mitchell
Development Control Manager

LISTING FORM
Case officer: **Elaine Connor** Application Number: **F/2000/3036**
Roman Road Service Station, Basingstoke Road, Spencers Wood, Reading.
Proposed installation of jet wash facility with flood lighting.

Transfer: Yes ☐ No ☐
Reason for Transfer:

_____

_____

Signed: _____ Date: _____

Councillor A Pollock

NB. It would be helpful for speedy decision making if you could respond, even if you do not wish this application to be transferred.

Tel: (0118) 974 6451

Date: 19/3/01

My ref: F/2000/3036

CONFIDENTIAL

Councillor B Patman
Meadow View
Basingstoke Road
Spencers Wood
Reading
RG7 1AL

Environmental Services Department
Planning Services
P.O. Box 157
Shute End, Wokingham
Berkshire RG40 1WR
Tel: (0118) 974 6000
Fax: (0118) 974 6484
Minicom No: (0118) 974 6991
DX: 33506 – Wokingham

Dear Councillor

Application Number: F/2000/3036
Roman Road Service Station, Basingstoke Road, Spencers Wood, Reading.
Proposed installation of jet wash facility with flood lighting.

I write to let you know that the above mentioned application has been recommended for APPROVAL: ☑ REFUSAL: ☐ under delegated powers.

If you have any questions please do not hesitate to contact **Elaine Connor** on **(0118) 974 6451**. If you then feel the application needs to be transferred to the next available Development Control Committee for decision please fill in the form below.
This form must be received no later than 29/3/01

Yours faithfully

John Mitchell
Development Control Manager

LISTING FORM

Case officer: **Elaine Connor** Application Number: **F/2000/3036**
Roman Road Service Station, Basingstoke Road, Spencers Wood, Reading.
Proposed installation of jet wash facility with flood lighting.

Transfer: Yes ☐ No ☐
Reason for Transfer:

_____

_____

Signed: _____ Date: _____

Councillor B Patman

NB. It would be helpful for speedy decision making if you could respond, even if you do not wish this application to be transferred.

WORK SHEET FOR : Elaine Connor

Application Number : F/2000/3036

Applicant : BP Oil Uk Ltd .

Location : Roman Road Service Station, Basingstoke Road, Spencers Wood, Reading.

Proposal : Proposed installation of jet wash facility with flood lighting.

Site Notice Displayed ? :

YES	NO	DATE
✓		

Date of Neighbour Notifications : .....

Date of Site Visit : .....

Date Registered : 18/12/2000

Earliest Date for Decision : 21/01/2001

Latest Consultation Date/Site Notice Expiry Date : 21/01/2001

This application will have expired on: 12/02/2001. You need to make a decision 1 day prior to this date for this application to count as determined in less than 8 weeks.

Consultation Responses :

E·A : see file for prop condition.
HIGHWAYS : No objection
OBS: 4 letters.

Planning Issues :

* IMPACT UPON NEIGHB. DWELLINGS
* " CHARACTER OF AREA.

Application No. F/2000/3036

Appraisal:

The application being considered proposes the construction of a jet wash facility with floodlighting at Roman Road Service Station, Basingstoke Road.

Planning permission to re-develop the site, to provide a new filling station was refused in 1998, but was subsequently allowed at appeal in 1999. This permission which included a jet wash facility has not yet been implemented. BP has confirmed that if this permission were to be implemented that the current proposal would be replaced, and would not remain as an additional jet wash facility.

Impact upon neighbouring dwellings

The proposed jet wash is to be located to the south west of the site approximately 10 metres from the site boundary with adjacent neighbouring dwellings. It is considered that the activity associated with the proposed facility will not cause any additional disturbance to neighbouring dwellings.
Local residents have raised concerns about the proposed floodlight to be located to the rear of the jet wash. However, the single floodlight proposed will face away from the neighbouring dwellings at the rear (approx. 26 metres away form the rear elevation of no.5 Grazeley Road). It is considered that given this arrangement the proposed light will not have an adverse impact upon the living conditions of the residents of this dwelling. There are also residential dwellings to the front of the filling station. The closest of these, 'The Cuddy' is approximately 40m away. It is therefore not considered that the floodlight will be intrusive to these dwellings.

Impact upon the character of the area

It is considered that the proposed jet wash is in keeping with the filling station and will not be out of character with the surrounding area.

RECOMMENDATION: Approval

Application Number F/2000/3036
Conditions/Reasons for Refusal

No	Std Con	Std Reas	Non Std Conditions / Reasons for Refusal
Reserve			
1	C001	R001	
2			No development shall be commenced until a noise assessment in accordance with BS4142 1997 is carried out for the development. Resulting from this assessment a scheme shall be submitted to protect dwellings and gardens/private amenity within the vicinity of the proposed development from the noise generated by the operation of the jet wash system. No development shall commence until the LPA has approved the scheme in writing. All works that form part of the ~~commenced~~ approved scheme shall be completed before the use hereby approved is commenced. The approved scheme shall be retained & maintained for the duration of the use.
		REASON	TO PROTECT THE ADJOINING OCCUPIERS & AREA GENERALLY FROM NOISE AND DISTURBANCE.
3			All carwasher & jet washers (including floodlighting) shall only be operated between the hrs of 0730 & 2200 Monday to Saturday & between 0930 & 1800 on Sundays, Bank holidays & public holidays

Informative for approvals REASON: To protect the adjoining occupiers & area generally from noise & disturbance

N16

LODDON AREA LOCAL PLAN POLICIES: LTV1,

SOUTH-EAST AREA LOCAL PLAN POLICIES:

WOKINGHAM DISTRICT LOCAL PLAN POLICIES: WO52, WO53.

GREEN BELT LOCAL PLAN POLICIES:

BERKSHIRE STRUCTURE PLAN POLICIES: OS1

MINERALS LOCAL PLAN POLICIES:

RECORD OF SITE VISIT

SITE ADDRESS: Roman Road Service Station Basingstoke Road Spencers Wood Reading.

APPLICATION NUMBER: F/2000/3036

OFFICER: Elaine Connor

DATE OF SITE VISIT: 10/1/01

1 SITE/STATUTORY NOTICE DISPLAYED ?

2. DESCRIPTION OF SURROUNDINGS

Surrounding residential area along. B'stoke Road, with other local services.

3. DESCRIPTION OF SITE/BUILDING

Filling station.

4. RELATIONSHIP TO ADJOINING PROPERTIES

Residental dwellings to SW of site

5. SITE CONSTRAINTS

TREES

ACCESS/PARKING

LEVELS

BOUNDARY TREATMENT

OTHERS

FAX COVER SHEET

TO: TRACY SAMPSON

FROM: ELAINE CONNOR

DESTINATION FAX No: 9885315

DATE: 30/1/01

TIME: 2.55 pm

SUBJECT: BP SERVICE STATION

TOTAL NUMBER OF PAGES (Inc. this cover sheet): 2

Environmental Services Department, P.O Box 157, Civic Offices, Shute End,
Wokingham, Berkshire RG40 1WR. Tel (0118) 9746428. Fax (0118) 9746484.

bp

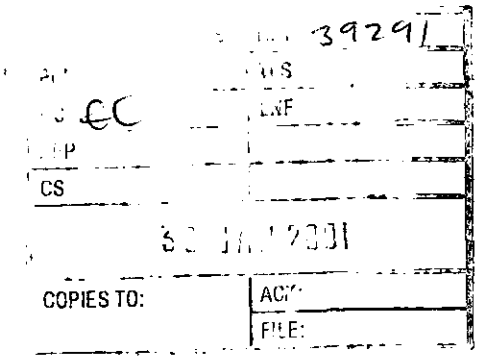

BP Oil UK Limited
Witan Gate House
500-600 Witan Gate House
Central Milton Keynes
MK9 1ES

Direct Line: 01908 853451
Main Switchboard: 01908 853000
Mobile: 07714 988624
Fax: 01908 853628
Email address: parhars@bp.com

The District Planning Officer
Wokingham District Council
Planning Department
P O Box No. 157
Council Offices
Shute End
Wokingham
Berkshire RG40 1WR

Your Ref: F/2000/3036

Our Ref: SP/ROMAN ROAD

26th January 2001

For the attention of Elaine Conner

Dear Madam,

ROMAN ROAD S/STN, BASINGSTOKE ROAD, THREE MILE CROSS, READING.

Further to our telephone conversation I am writing to confirm that if the current planning application is granted permission this will not result in BP building 2 No. jet washes on the site. BP consider that the redevelopment proposals for the whole site, which were granted full planning permission at appeal earlier, and the current planning application to be completely separate with only one of them being implemented. If the earlier planning permission were to be implemented in the future then the whole of the existing site facilities, including the proposed jet wash, would be demolished.

I hope the above clarifies the position and will enable you to progress the planning application.

Yours faithfully

Satnam Parhar
Planning Co-ordinator

Cc Paul Phillips

Registered company information
Registered company address
Witan Gate House
500-600 Witan Gate House
Central Milton Keynes
MK9 1ES

18 DEC 2000* 3036

Thorlux Lighting

AZMET 3

FLOODLIGHT FOR 150–400 WATT DISCHARGE LAMPS

Installation Details

IMPORTANT – SAFETY BEFORE CARRYING OUT ANY SERVICING ON THIS LUMINAIRE ENSURE THE MAINS IS FULLY ISOLATED

KEEP THIS LEAFLET FOR SERVICE REFERENCE

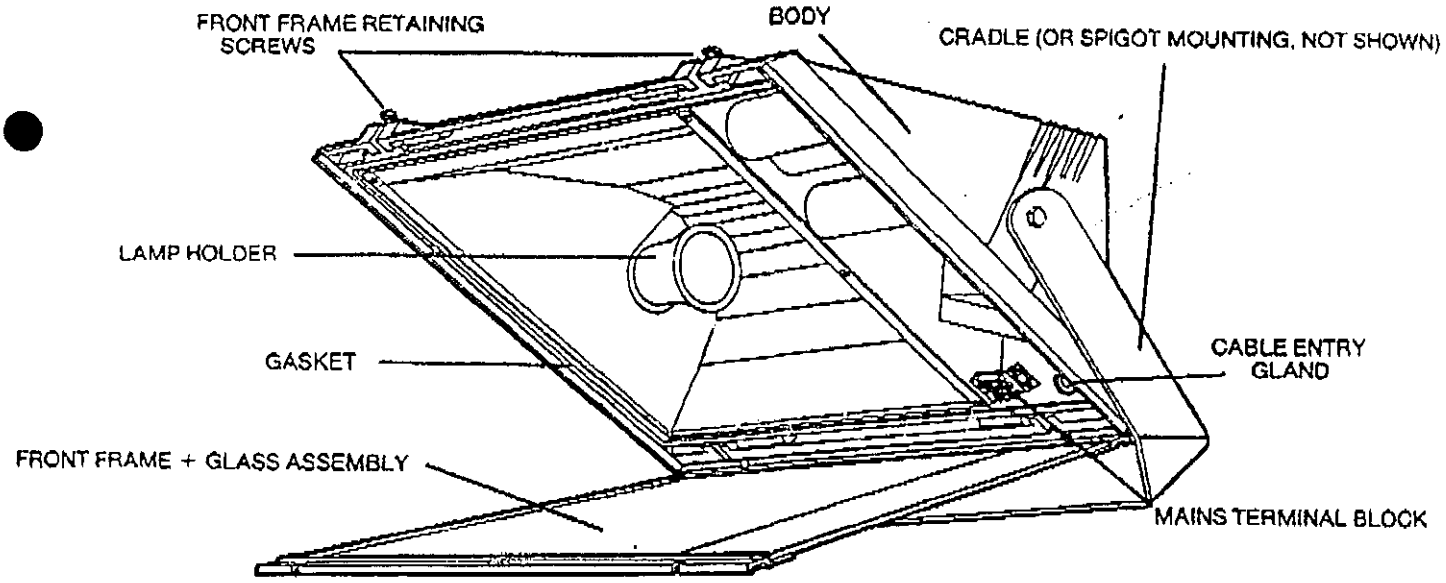

INSTALLATION AND MOUNTING OF THE AZMET 3.

CRADLE MOUNTING

1. Fit the cradle to the wall, ceiling or floor in the required position using 2 x 12mm bolts, (not supplied) on the 470mm fixing centres. (The other holes are for 'U' bolts to fix the fitting to poles if required). Note the position of the slot in the one arm and ensure cradle is fitted as indicated in the sketches (see over). The slot must not point downwards.
2. The Azmet 3 is then offered up to the holes on one end of the cradle and is slotted into the other end of the cradle. Ensure the friction washers are placed between the cradle and the spacer castings on the sides of the fitting. When the fitting is in the required position tighten up the two M10 locknuts to make it secure. (The peak beam indicator is on the side of the fitting)

SPIGOT MOUNTING

1. To be use on 3" (76mm) dia. pole. (Spigot adaptor may be required).
2. Place Azmet 3 on top of pole, ensure cable runs through inside the slot on the inside top of the spigot mounting bracket, taking care not to trap the cable.
3. Position the Azmet 3 and tighten the two M8 bolts on back of mounting bracket, to secure the fitting.

Cradle Mounting Version

Cradle Fixing: 2-14mm dia. Holes on 470mm centres

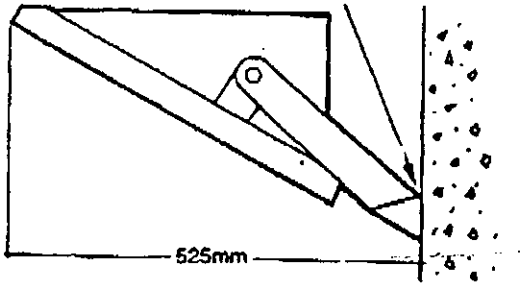

Width of fitting: 560mm (body)
610mm max. (over Cradle Studs)

Spigot Mounting Version

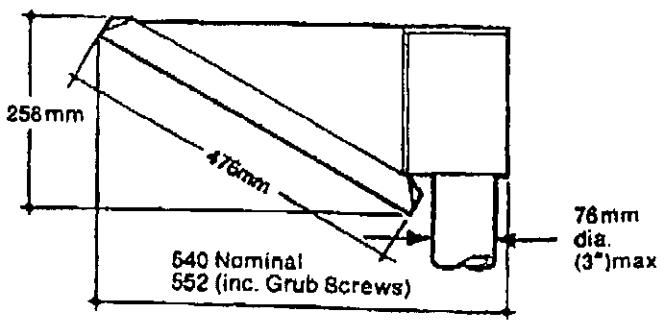

AZMET 3

Classified IP65

AN ENCLOSED AREA FLOODLIGHT WITH INTEGRAL CONTROL GEAR FOR DISCHARGE LAMPS UP TO 400 WATTS

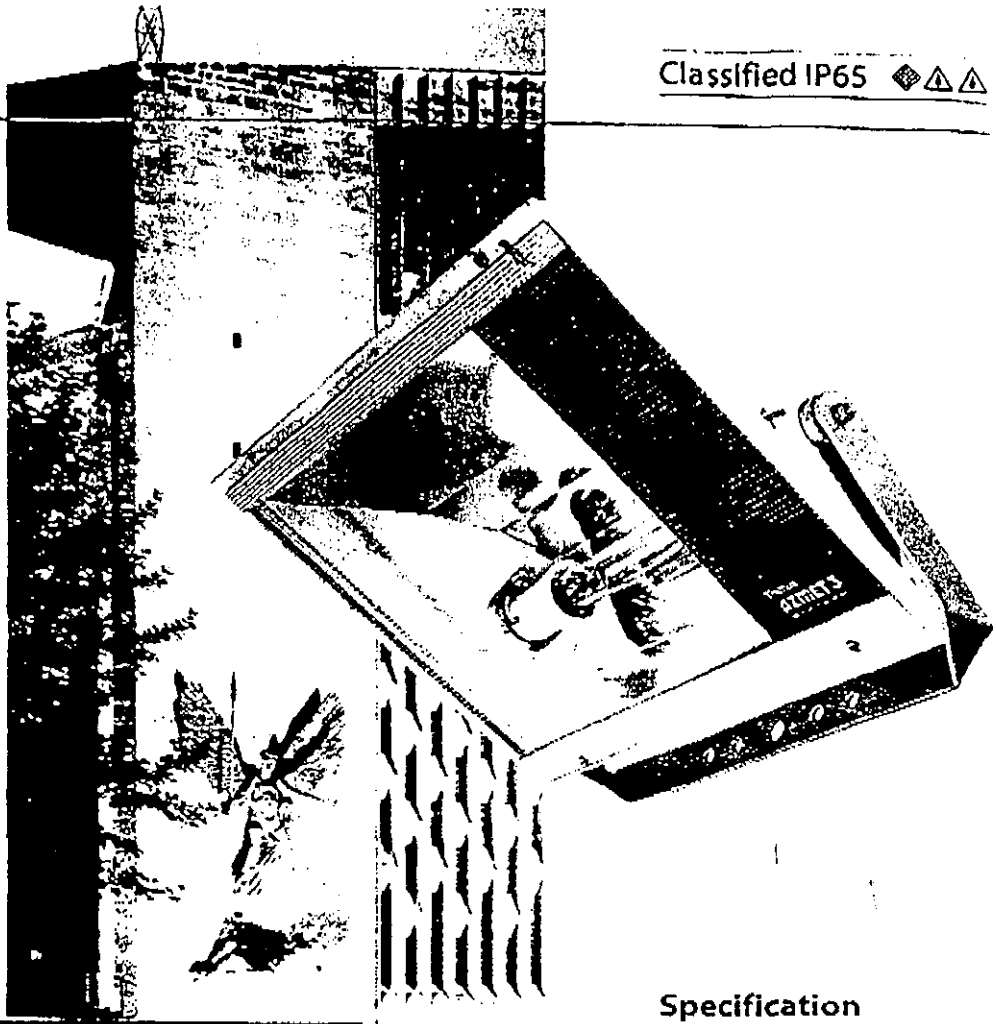

Applications

Car parks, forecourts, sports grounds, facades, industrial yards, goods areas, docks, railway complexes, pedestrian shopping precincts, security lighting etc.



Specification

BODY
GRP moulding finished off-white. Houses lampholder, control gear, reflector, silicone rubber gasket for sealing frame to body and a nylon weatherproof gland for incoming cables.

COVER
Extruded aluminium with clear toughened glass panel, hinges at bottom of body for access and is secured with four stainless steel screw fasteners.

REFLECTOR
Anodised aluminium, specular finish and faceted to give double asymmetric light distribution.

CONTROL GEAR
Comprises ballast, capacitor and ignitor *(if required)* for 240V, 50Hz operation, *(other voltages and frequencies on request)*. Gear and skirted GES porcelain lampholder are pre-wired to a mains terminal block, (capacity: 6mm² cables).

MOUNTING
Luminaires are supplied for fixed-head mounting with an extruded aluminium spigot mounting bracket *(for 76mm diameter poles)* or for floor/wall mounting with a galvanised steel cradle.

Features

- ***Body is one-piece corrosion-resistant and fire-retardant G.R.P. moulding.***
- ***Toughened glass front cover hinges down for easy relamping.***
- ***Faceted reflector provides wide double asymmetric light distribution.***
- ***Tubular or elliptical discharge lamps up to 400 watts.***
- ***Complies with EN60 598 2-5 (BS 4533:102.5), classified IP65, dust-tight and jet-proof.***
- ***Fixed-head mounting or cradle for wall/floor mounting allowing vertical aiming angle adjustment.***
- ***A photocell control unit is available as an optional extra.***
- ***Conforms with relevant EEC directives.*** CE

Range

LAMP & WATTS	LAMP MAN'R	FIXED HEAD CATALOGUE NUMBER	WEIGHT (kg)	CRADLE MOUNTING CATALOGUE NUMBER	WEIGHT (kg)	DESCRIPTION
			FLOODLIGHT LESS CONTROL GEAR			
150W-400W	ANY	**AZ 7074**	9.9	**AZ 6996**	9.8	*For tubular or elliptical lamps*
			FLOODLIGHT WITH CONTROL GEAR			
HIGH PRESSURE SODIUM LAMPS (SON or SON-T)						
150W SON(-T)	ANY	**AZ 7076**	14.8	**AZ 6998**	14.7	
250W SON(-T)	ANY	**AZ 7078**	15.4	**AZ 7000**	15.3	*For tubular or elliptical lamps*
400W SON(-T)	ANY	**AZ 7080**	15.4	**AZ 7002**	15.3	
MERCURY VAPOUR LAMPS (MBF)						
250W MBF	ANY	**AZ 7085**	15.3	**AZ 7007**	15.2	
400W MBF	ANY	**AZ 7086**	15.3	**AZ 7008**	15.2	
METAL HALIDE LAMPS (MBIF, MBI-T)						
150W MBIF ●	V	**AZ 7076**	14.8	**AZ 6998**	14.7	
250W MBI-T ●	V/O	**AZ 7078**	15.4	**AZ 7000**	15.3	*For tubular or elliptical lamps*
400W MBI-T ●	V/O	**AZ 7080**	15.4	**AZ 7002**	15.3	

● **METAL HALIDE LAMPS:** Use V-Venture or O-Osram lamps (compatible with high pressure sodium control gear).

For recommended lamps see pages 17 and 18.

Photo-cell operation

A photocell is fitted to the top of the body and switches the luminaire on and off automatically.
The unit is pre-set to switch on at approximately 55 lux.

ORDERING

Quote catalogue number of 'Azmet 3' followed by suffix 'PC' e.g. **AZ 7076PC.**

Spares and Accessories

DESCRIPTION	CATALOGUE NUMBER
Front glass/frame assembly	**AZ 7276**
G.E.S. skirted lampholder	**LH 5034**
■ Pole clamp assembly *(for 50 - 100mm dia. poles)*	**PC 5108**
■ Pole clamp assembly *(for 100 - 180mm dia. poles)*	**PC 4721**

■ *For use with cradle mounted versions only.*

Wall Bracket

For use with fixed-head versions.
Allows adjustment in the azimuth plane.
Steel, galvanised.

Fixing: 4-14mm diameter holes on 230 x 230mm centres.
Catalogue number AZ 7277

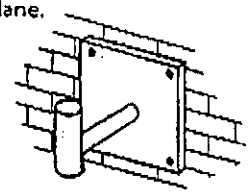

Pole Mounting Accessories

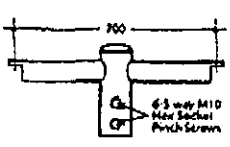

Cross Arm for two floodlights
Cradle versions only.
To suit 89mm diameter poles.
Steel galvanised.
Catalogue number AZ 7278



Adaptor for one floodlight
Fixed-head versions only.
To suit 89mm diameter poles.
Steel galvanised.
Catalogue number AZ 7279



Adaptor for one floodlight
Cradle versions only.
To suit 89mm diameter poles.
Steel galvanised.
Catalogue number AZ 7280

Fixed-head Mounting

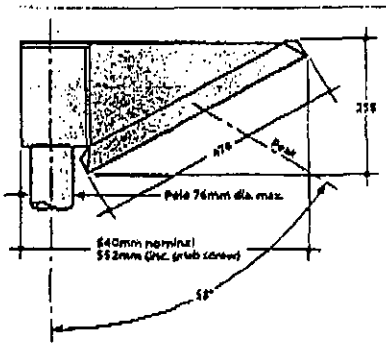



Cradle Mounting

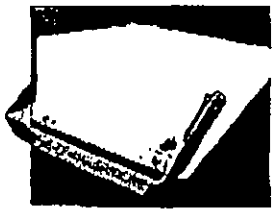

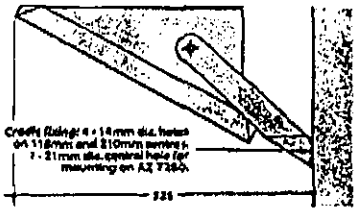

THORLUX EXL-WIN (c) Thorlux Lighting 1997

Project No. **file name** **Date/user** 09.12.97 / Chris Valentine

Project Description Isolux Diagram for 250W MBF/U Azmet 3 Floodlight mounted on 5m column at 58 deg. elevation angle.
ATTN HAROLD FAX NO 0181 541 4884

Isolux Diagram - Utilisation Plane (Eh)

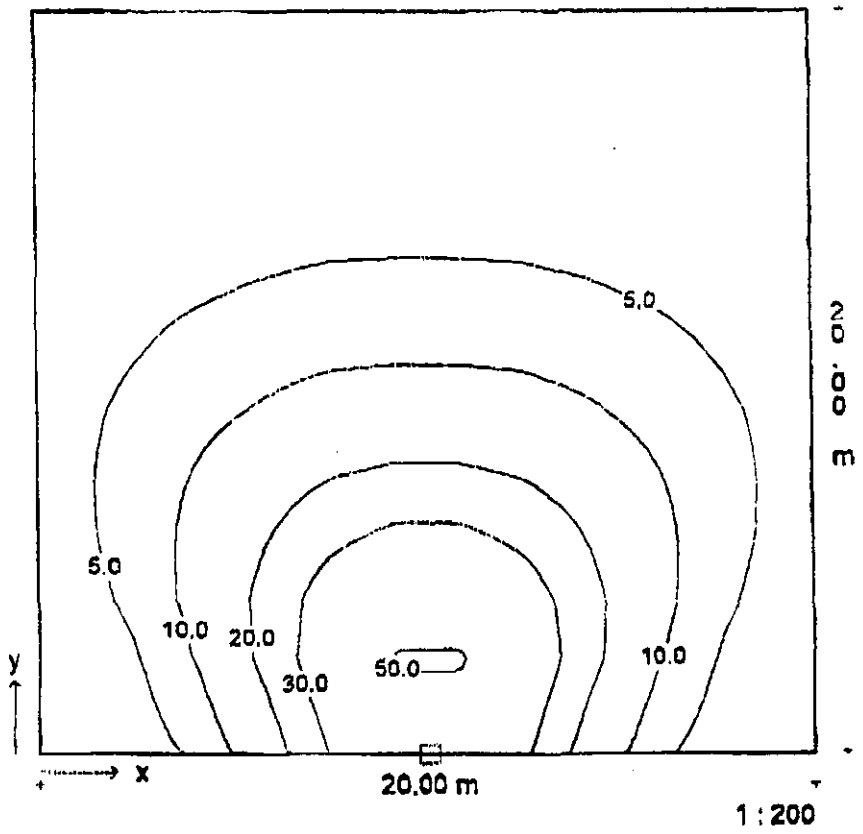

Average illuminance Eav 10.1 lx
Uniformity Emin/Eav 0.12

Thorlux Lighting, Merse Road, North Moons Moat, Redditch, Worcs, B98 9HH
Telephone: (01527) 583200 Fax: (01527) 584177 Direct U.K. Sales Line: (01527) 595595

M650/8701 1342 31.10.1991 / M

LUMINAIRE AZMET 3 - AZ7007 AZ70
AZMET 3 FLOODLIGHT WITH CRADLE - 250W MBF/U

length / width / height of luminaire	0.560 m / 0.540 m / 0.258
length / width of horizontal luminous area	0.560 m / 0.476
height of vertical luminous area C0- / C90-plane	0.000 m / 0.000
height of vertical luminous area C180- / C270-plane	0.000 m / 0.000

TEST CONDITIONS

test distance	1.00 m	ambient temperature	25.
supply voltage	240.0 V	scaling factor (units/lx)	1.0
Tilt of luminaire	0.0 °		

BARE LAMPS

number of lamps			
Lamp voltage		Lamp current	
Lamp wattage		Luminous flux of lamps	1000

STANDARD SETS OF LAMPS

number of lamps	1
type	250W MBF/U
total flux (lm)	11500
colour appearance	COOL/4000
colour rendering index	2/40
wattage incl. ball. (W)	275

TEST RESULTS OF LUMINAIRE

Luminaire luminous flux - lower hemisphere -		571 lm
Luminaire luminous flux - upper hemisphere -		0 lm
Luminaire luminous flux - total -		571 lm
Downward light output ratio	DLOR	57.1 %
Upward light output ratio	ULOR	0.0 %
Light output ratio luminaire	LORL	57.1 %
Downward flux fraction	DFF	1.00

CHARACTERIZATION OF LUMINAIRE ACCORDING TO LiTG (5th Edition) A50

Luminous flux - lower hemisphere -	572 lm, Phisu = 0.64	Worksheet
Luminous flux - upper hemisphere -	0 lm, Phiso = 0.00	
Luminous flux - total -	572 lm, Phiu = 1.00	

LUMINAIRE CLASSIFICATIONS

DIN 5040	A50				
UTE C 71-121	0.57 C + 0.00 T				
NBN L 14-002	BZ 3				
CIBSE TM5	BZ 3				
CIE Flux Code	63	90	98	100	57

F.W. Thorpe PLC Merse Road, North Moons Moat, Redditch Worcs. B98 9HH England
Telephone 01527 5832
Telefax 01527 5841

THORLUX LIGHTING

LUM650/8701 1342 31.10.1991 / MAT

AZ7007

LUMINAIRE AZMET 3 - AZ7007
AZMET 3 FLOODLIGHT WITH CRADLE - 250W MBF/U

LUMINOUS INTENSITY DISTRIBUTION IN POLAR DIAGRAM

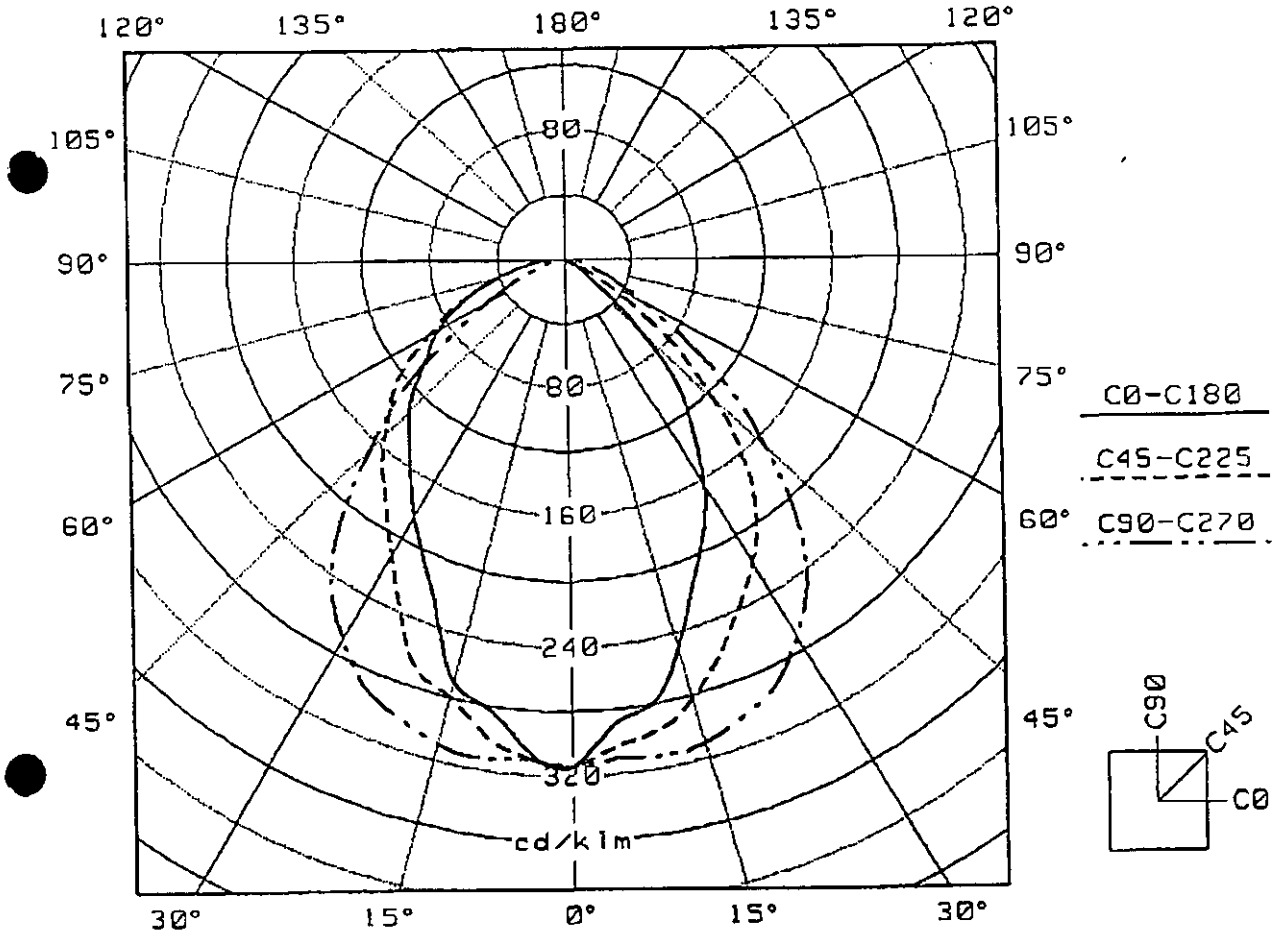

Light output ratio luminaire LORL 0.57

DIN 5040	A50				
UTE C 71-121	0.57 C	+	0.00 T		
NBN L 14-002	BZ 3				
CIBSE TM5	BZ 3				
CIE Flux Code	63	90	98	100	57

F.W. Thorpe PLC Merse Road, North Moons Moat, Redditch Worcs. B98 9HH England
Telephone 01527 583200
Telefax 01527 584177

WOKINGHAM DISTRICT COUNCIL

MEMORANDUM

From: John Mullaney
Environmental Health

My Ref:

To: Elaine Connor
Planning

Your Ref: F/2000/3036

Date. February 6, 2001

PROPOSED: INSTALLATION OF JETWASH FACILITY WITH FLOOD LIGHTING

LOCATION: ROMAN ROAD SERVICE STATION, BASINGSTOKE ROAD, SHINFIELD

These proposals have been evaluated and I recommend that the following conditions be attached should planning consent be granted:

No development shall be commenced until a noise assessment in accordance with BS4142 1997 is carried out for the development. Resulting from this assessment a scheme shall be submitted to protect dwellings and gardens/private amenity within the vicinity of the proposed development from the noise generated by the operation of the jet wash system. No development shall commence until the Local Planning Authority has approved the scheme in writing. All works that form part of the approved scheme shall be completed before the use hereby approved is commenced. The approved scheme shall be retained and maintained for the duration of the use.

Reason :To protect the adjoining occupiers and area generally from noise and disturbance.

All carwasher and jet washers shall only be operated between the hours of 0730 and 2200 Monday to Saturday and between 0930 and 1800 on Sundays, Bank Holidays and public holidays.

Reason :To protect the adjoining occupiers and area generally from noise and disturbance.

John Mullaney

JOHN MULLANEY
SENIOR ENVIRONMENTAL HEALTH OFFICER
ENVIRONMENTAL PROTECTION AND HOUSING

39665
ENF
08 FEB 2001
COPIES TO:
ACK:
FILE:

WOKINGHAM DISTRICT COUNCIL

MEMORANDUM

From: John Mullaney
Environmental Health

My Ref:

To: Elaine Connor
Planning

Your Ref: F/2000/3036

Date. February 6, 2001

PROPOSED: INSTALLATION OF JETWASH FACILITY WITH FLOOD LIGHTING

LOCATION: ROMAN ROAD SERVICE STATION, BASINGSTOKE ROAD, SHINFIELD

These proposals have been evaluated and I recommend that the following conditions be attached should planning consent be granted:

No development shall be commenced until a noise assessment in accordance with BS4142 1997 is carried out for the development. Resulting from this assessment a scheme shall be submitted to protect dwellings and gardens/private amenity within the vicinity of the proposed development from the noise generated by the operation of the jet wash system. No development shall commence until the Local Planning Authority has approved the scheme in writing. All works that form part of the approved scheme shall be completed before the use hereby approved is commenced. The approved scheme shall be retained and maintained for the duration of the use.

Reason :To protect the adjoining occupiers and area generally from noise and disturbance.

All carwasher and jet washers shall only be operated between the hours of 0730 and 2200 Monday to Saturday and between 0930 and 1800 on Sundays, Bank Holidays and public holidays.

Reason :To protect the adjoining occupiers and area generally from noise and disturbance.

John Mullaney

JOHN MULLANEY
SENIOR ENVIRONMENTAL HEALTH OFFICER
ENVIRONMENTAL PROTECTION AND HOUSING

Shinfield
Parish Council

Clerk: Mrs J Barnes, 36 Ryhill Way, Earley, Reading, Berkshire RG6 4AZ
Tel/Fax: 0118 9547115

31st January 2001

Planning Officer
Development Control South
Wokingham District Council
PO Box 157
Shute End
WOKINGHAM RG40 1WR

Dear Sir/Madam

PLANNING APPLICATIONS
SHINFIELD PARISH COUNCIL'S OBSERVATIONS

I submit the comments of the Planning and Transportation Committee on the following applications:

F/2000/3122
Location: 285 Hyde End Road, Spencers Wood
Proposal: Proposed two storey side/rear extension to dwelling
Observations No comment

F/2000/3123
Location: Tankerton House, Basingstoke Road, Spencers Wood
Proposal: Proposed installation of basement escape door and steps (Retrospective)
Observations: Whilst no objection to the basement escape door in the interests of safety we recommend that conditions be applied to ensure that the already established egress is not used as a loading/unloading facility with vehicles parked on the pavement by one of the occupants in close proximity to a busy road junction, as has been reported by local residents and constitutes a road safety hazard.

0/2000/3128
Location: 102 Grazeley Road, Three Mile Cross
Proposal: Outline application for residential development (40 dwellings)
Observations: Whilst we consider residential development is preferable to the current commercial use. We have concerns about the increased generation of traffic additional to the existing residential sites on this already inadequate country lane, which joins the busy Basingstoke Road at an inadequate junction.

F/2000/3131
Location: 8 Milsom Close, Shinfield
Proposal: Proposed loft conversion and front and rear dormer extensions
Observations: We express concern on the unsympathetic design and its impact in the street scene.

Continued...

F/2000/3133
Location: 1 & 2 Hill View, Basingstoke Road, Spencers Wood
Proposal: Proposed demolition of two dwellings and erection of six dwellings
Observations: We express concern that the elevations should reflect the character of the surrounding area and use materials consistent with the architectural character of the adjoining properties.

F/2001/3154
Location: Sarum, Basingstoke Road, Spencers Wood
Proposal: Proposed erection of single storey rear extension plus enlargement of two windows in south elevation and additional window to living room.
Observations: We express some concern about the new windows overlooking the adjoining properties.

F/2000/3036
Location: Roman Road Service Station, Basingstoke Road, Three Mile Cross
Proposal: Proposed installation of jet wash facility with flood lighting.
Observations: Whilst not objecting in principle to the provision of this facility. We object to the location as it is in close proximity to a listed building and encroachment onto the green area of separation. There would appear to be better locations on the site to permit a drive through operation. The site is immediately adjoining an Area of Special Character and residences therefore floodlighting and hours of operation need to be tightly controlled.

F/2001/3212
Location: 225-227 Hyde End Road, Spencers Wood
Proposal: Proposed erection of three detached dwellings
Observations: The location of the above application is Spencers Wood not Shinfield.
We express concern at the mock Tudor design which is out of character with the area and the placement of garages directly in front of one of the dwellings causes us concern.

F/2001/3204
Location: 9 Greenend Close, Spencers Wood
Proposal: Proposed two storey side extension to dwelling and single storey rear extensions
Observations: No comment

F/1999/ 69917/F
Location: University Reasearch Centre, Shinfield Road, Shinfield
Proposal: Right turn lane on Shinfield Road
Observations: No comment

Yours sincerely

Mrs Tracy Sampson
Assistant Clerk (01189885315)

See part 1 plans.

To:
Harold Sanders
Urban Design And Conservation Officer

29 DEC 2000

From: Elaine Connor

Date: 28 December 2000

Application Number: F/2000/3036

Proposal: Proposed installation of jet wash facility with flood lighting..

Site Address:
Roman Road Service Station, Basingstoke Road, Spencers Wood, Reading.

Applicant:
BP Oil Uk Ltd .

Your observations are required in respect of this application within **7 days** of the above date.

I UNDERSTOOD A JET WASH FACILITY + LIGHTING WAS PART OF A PREVIOUS SCHEME WHICH WENT TO APPEAL.

1. IS THERE AN ESSENTIAL DIFFERENCE BETWEEN THIS AND THE PREVIOUS SCHEME. THE VISUAL SENSITIVITY OF THIS LOCATION IN RELATION TO LISTED BUILDINGS AND DWELLINGS HAS ALREADY BEEN ACKNOWLEDGED.

2. WHY IS IT NECESSARY TO ADD ADDITIONAL FLOODLIGHTING TO THE FORECOURT WHICH IS ALREADY WELL LITE BY THE CANOPY LIGHTS.
I CONSIDER LIGHTING ON THE STRUCTURE WOULD BE A MORE ACCEPTABLE VISUAL SOLUTION.

Harold Sanders.
CONSERVATION + DESIGN. 15.01.01.

HIGHWAYS CONSULTATION SHEET

From: Elaine Connor **Date:** 28 December 2000

Application Number: F/2000/3036

Proposal: Proposed installation of jet wash facility with flood lighting.

Parish: SHINFIELD PARISH

Site Address:
Roman Road Service Station, Basingstoke Road, Spencers Wood, Reading.

Applicant:
BP Oil Uk Ltd .

Your observations are required in respect of this application within **7 days** of the above date.

✓ below as applicable;

1) ☐ Recommend refusal for the reason(s) **stated below**;
2) ☐ Recommend approval but with condition(s) & reason(s) **stated below**;
3) ☑ Recommend approval with **no** condition(s) or reason(s).

Signed: _____ **Print name:** Adam Coggins .

Our ref: SP\2001\002953\001
Your ref: F/2000/3036

Date: 24th January 2001

ENVIRONMENT AGENCY 39146

23 JAN 2001

COPIES TO: ACK: FILE:

District Planning Officer
Wokingham District Council
Council Offices
Shute End
Po Box 157
Wokingham
Berkshire RG11 1BN

Attention: Elaine Conner

Dear Madam

PROPOSED INSTALLATION OF JET WASH FACILITY WITH FLOOD LIGHTING AT ROMAN ROAD SERVICE STATION, BASINGSTOKE ROAD, SPENCERS WOOD, READING

Thank you for your letter dated 28 December 2000 which was received on 2 January 2001. You are asked to quote the following reference in any correspondence: SU76NW/12/2.

The Environment Agency has no objection to the proposed development.

PLANNING INFORMATIVE

The following planning informative should be attached to any planning permission granted:

Under the terms of the Water Resources Act 1991, the prior written consent of the Environment Agency is currently required for any discharge of sewage or trade effluent onto or into ground and for surface runoff into groundwater. Such consent may be withheld. If there is an existing discharge consent the applicant should ensure that any increase in volume is permitted under the present conditions. Contact Tracey Mckeown on 01276 454366 for further details.

ADVICE TO APPLICANT

- All sewage or trade effluent should be discharged to the foul sewer if available subject to the approval of Thames Water Utilities or its sewerage agent.

A copy of this letter has been sent to the agent. If you have any further queries please do not hesitate to contact me on 01276 454323, quoting the reference cited at the beginning of this letter.

Cont/d..

Environment Agency
Swift House, Frimley Business Park, Frimley, Camberley, Surrey GU16 7SQ
Telephone : 01276 454300 Fax : 01276 454301

Yours faithfully

pp **Sarah Paxman**
Development Planning Officer

cc. Mr S. Parhar, BP Oil UK Ltd, 500-600 Witan Gate, Milton Keynes, Bucks MK9 1ES

WISTARIA COTTAGE
CHURCH LANE
THREE MILE CROSS
Nr READING
RG7 1HD
Tel No0118 9883422
02/01/01

PLANNING SERVICES	HPT
POL	TLS
DC	ENF
APP	
CS 035	EC
05 JAN 2001	
COPIES TO:	ACK:
	FILE:

Elaine Conner
Environmental Services Department
Planning Services
P. O. Box 157
Shute End

Application Number F/2000/3036

Proposed installation of jet wash facility with flood lighting at Roman Road Service Station at Three Mile Cross.

This area is residential and the site has houses on three sides.To approve of an installation that is noisy in both its own machinery and running water coupled with floodlighting must be completely out of the question.

During the last few weeks of awful weather the water drainage system around this area has proved inadequate.The building of numerous houses along the Grazeley Road has not helped the situation. The cottage next to the Garage in question has suffered flooding, cased by inadequate drainage at the garage itself. To approve a jet wash facility would be foolhardy.

Within half a mile of this site there are two car wash facilities. The first along the A33 relief road. and the second over the M4 along the Basingstoke Road. There is obviouly no requirement for this facility

Yours faithfully,

O.S.Evans

Ian Jordan

From: WebComments@wokingham.gov.uk
Sent: 02 January 2001 22:57
To: ian.jordan@wokingham.gov.uk
Subject: Comments on Planning Applications

****

NatureofEmail: Object
ApplicationNumber: F/2000/3036
Correspondent_FullName: O.S.Evans
Correspondent_StreetAddress: Wistaria Cottage
Correspondent_Address2: Church Lane, Three Mile Cross
Correspondent_Town: Nr. Reading
Correspondent_County: Berks.
Correspondent_PostCode: RG7 1HD
Correspondent_Telephone: 9883422
Correspondent_Email: osmde@wistariac.fsnet.co.uk

Roman Rd. Serv. Station

Comments:

1.Houses on three sides of site.
2.Inadequate drainage at this site,there has already be flooding at cottage net door.
3.Two other carwashes within 2 miles

OBJ
EC

Mrs BETTY DYER
HIGHWAY COTTAGE
THREE MILE CROSS
READING, BERKSHIRE
RG7 1BA
TEL: READING (0734) 883573

5th January 2001

Application Number: F/2000/3036.

Site Address: Roman Road Service Station - Three Mile Cross.

Proposal: ~~Installation of~~ jet wash facility with flood lighting.

POL	TEC
APP CS	
OBS 09 JAN 2001 EC	
COPIES TO:	ACK: / FILE:

Dear Mr Connor.

As over the years I have objected to the building of the B.P. Filling Station, and then to it's addition of the shop and the pumps, I am obviously against any more installations. The whole development is already an eyesore in this small village, and any added installation can only make it worse.

Living so close to the Service Station, I will find the noise of the jet wash, and the extra activity very disturbing. What is the point of having a bypass if you are going to encourage people out of the area to use the Basingstoke Road, by floodlighting and offering car washing facilities? Do you want to make Three Mile Cross which you designated in 1999 an area of special character, due to Mary Mitford's classic book 'Our Village', just like a suburb of Reading?

This development would encourage more cars to use the Basingstoke Road. If the Station obtains permission to keep late hours and use floodlighting it will remove from the village the comparitive peace in the evenings, creating more noise, litter and even vandalism.

There are excellent refreshment facilities - five minutes away at Shinfield Village and at Asda.

Please stop Big Business having the power to enlarge, pollute and destroy a pleasant village.

Yours Sincerely
Betty Dyer.

P.S. You sited the address of the Roman Road Service Station at Spencers Wood.
It is not at Spencers Wood - it is at Three Mile Cross - a very much smaller area!

Ian Jordan

From: WebComments@wokingham.gov.uk
Sent: 26 January 2001 06:57
To: ian.jordan@wokingham.gov.uk
Subject: Comments on Planning Applications

****

OBJ
2000/3036
EC

NatureofEmail: Object
ApplicationNumber: F20003036
Correspondent_FullName: Mr & Mrs R.Erdwin
Correspondent_StreetAddress: Orchard House,Church Lane
Correspondent_Address2: 3 Mile Cross
Correspondent_Town: Reading
Correspondent_County: Berkshire
Correspondent_PostCode: RG7 1HD
Correspondent_Telephone: 0118-9884457
Correspondent_Email:

Comments:

Jetwash and floodlighting for BP filling station.The above planning application no.shows the above filling station as Spencers Wood when it is in Three Mile Cross! We object to expansion of said site,we wish to keep the village peaceful,this application will encourage more vehicular congestion and pollution which we suffer enough of living close to the motorway.Floodlighting would encrouch on residential property and disturb sleeping habits!!

WOKINGHAM D.C. DEVELOPMENT CONTROL

Valid

Start date: ~~20 NOV~~ 13 DEC	Map No. 78.. Site ..0.36....
Officer: EC | Application No. F/2000/3036	Easting: ..... Flood Pln .....
	Northing: ..... Mineral .....

Level: ☐ **Sub Committee** ☑ **Delegated** ☐ **Sec. State**

☐ **Incorrect Fee** ☐ **Invalid** ☐ **PD**

Description:
(F) PROPOSED INSTALLATION OF JET WASH FACILITY WITH FLOOD LIGHTING

Location: ROMAN ROAD SERVICE STATION, BASINGSTOKE ROAD

Parish: ~~SWALLOWFIELD~~ Shinfield Ward: Shinfield
28.12.2000 D

Applicant: BP OIL UK LTD

Fee Received 95-00 (4) Required ..... Additional ..... Refund .....

Enforcement Section to be notified ☐ tick if required

Additional information required for validation

		Reason	Requested	Received
1	1:2500 OS location plan showing property edged in blue/red			
2	1:500 block plan showing existing & proposed dev. + adj. Properties			
3	Forms unsigned			
4	Correct S 66 certificate			
5	Elevation plans	(see below).	8/12	✓ 18/12
6	Floor plans	Show position of floodlights on drawing 101 3785	8/12	✓ 18/12
7	Metric scale disclaimer			
8	Encroachment letter			
9	Miscellaneous	Will floodlights be on poles? (as shown on photos) If so, need details of height + elevations	8/12	✓ 18/12

Also need details of wall-mounted lights (as shown on photos) — height above ground + elevations. — NONE

APPLN NO. _____

ACTION REQUIRED BY DEVELOPMENT CONTROL

Conservation Area .....

Listed Building 1 2 2*

Advertisement Required .....

Date Site Notice Sent : 28.12.2000 D Parish Council Informed - YES / NO

INTERNAL CONSULTATIONS

Building Control .....
Landscape .....
Trees ✓ .....
Conservation Officer affect on listed buildings? .....
Environmental Health ✓ .....
Housing .....
Leisure & Cultural services .....
Public Rights of Way .....
Property .....
District Secretary (only if called in by SOS) .....
Policy & Plans .....
Strategic Planning (JSPU) .....
Minerals (INTERNAL) .....
Archaeological Site (BABTIE) : .....
Education .....
Social Services .....
Highways ✓ .....

EXTERNAL CONSULTATIONS

Adjacent D P A : .....
Adjacent Parish : .....
Southern Electricity Board .....
British Gas .....
PSA Oil Pipeline .....
Transco : .....
Environment Agency ✓ .....

Rail Track .....
Police Arch. Liaison Officer .....

HERITAGE BODIES

The Georgian Group .....
Ancient Monuments Society .....
Council for British Arch. .....
RCHME .....
Telecommunications (NRPB) : .....
Sport England : .....

OTHERS:

.....
.....
No pre-apps

NEIGHBOURS:

S/N + see map
+ Roman Rd Service Station, Basingstoke Rd, Three mile Cross

bp

18.DEC.2000* 3036

18 DEC

BP Oil UK Limited
Witan Gate House
500-600 Witan Gate House
Central Milton Keynes
MK9 1ES

Direct Line: 01908 853451
Main Switchboard: 01908 853000
Mobile: 07714 988624
Fax: 01908 853628
Email address: parhars@bp.com

The District Planning Officer
Wokingham District Council
Planning Department
P O Box No. 157
Council Offices
Shute End
Wokingham
Berkshire RG40 1WR

Our Ref: SP/ROMAN ROAD

14th December 2000

Dear Sir,

ROMAN ROAD S/STN, BASINGSTOKE ROAD, THREE MILE CROSS, READING.

Further to the submission of a full planning application for the installation of a jet wash facility on the above site on 25th November and its subsequent return due to additional information being required please find enclosed:

1 The application as submitted previously
2 Drawing 10137-85 now shows the location of the proposed floodlight
3 6 No. copies of a drawing illustrating the floodlight elevations
4 I confirm that there are to be no wall mounted floodlights. The photographs enclosed with the planning application are described in my covering letter as being 'typical' and are meant to give you a representation of what the as built facility will look like but are not specific to the application site.

I hope the above will now allow you to process the planning application.

Yours faithfully

Satnam Parhar
Planning Co-ordinator

bp

18 DEC 2000 3

BP Oil UK Limited
Witan Gate House
500-600 Witan Gate House
Central Milton Keynes
MK9 1ES

Direct Line: 01908 853451
Main Switchboard: 01908 853000
Mobile: 07714 988624
Fax: 01908 853628
Email address: parhars@bp.com

The District Planning Officer
Wokingham District Council
Planning Department
P O Box No. 157
Council Offices
Shute End
Wokingham
Berkshire RG40 1WR

Our Ref: SP/ROMAN ROAD

25th November 2000

Dear Sir,

ROMAN ROAD S/STN, BASINGSTOKE ROAD, THREE MILE CROSS, READING.

Please find enclosed a full planning application for the installation of a jet wash facility and associated floodlight at the above site. I enclose:

1 Six copies of completed application forms
2 Six copies of an OS map extract locating the site
3 Six copies of drawing number 10137-85 which illustrates the proposed jet wash facility in context with the site as a whole
4 Six copies of photographs of a typical jet wash installation
5 Six copies of manufacturers information on the proposed floodlight
6 A cheque in the amount of £95.00 this being the correct application fee

You will note from the proposal drawing that the jet wash is located in a position where it will not affect the safe operation of the forecourt and also that jet wash screens are proposed which will protect adjacent areas from water spray.

If you have any queries on the above or require any additional information do not hesitate to contact the writer. I should be pleased to discuss the application with you in due course.

Yours faithfully

Satnam Parhar
Planning Co-ordinator

Registered company information
Registered company address
Witan Gate House
500-600 Witan Gate House
Central Milton Keynes
MK9 1ES

1789/a

SECTION 66 CERTIFICATE

Application No.

Please fill in both Certificate A, B, C or D and the Agricultural Holdings Certificate. Delete sections not relevant.

CERTIFICATE A

18 DEC 2008* 3036

I certify that:

at the beginning of the period of 21 days ending with the date of the accompanying application, nobody, except the applicant, was the owner of (a) of any part of the land to which the application relates.

(a) "Owner" means a person having a freehold interest or leasehold interest the unexpired term of which is not less than 7 years.

OR

CERTIFICATE B

I certify that:

I have/The applicant has* given the required notice to everyone else who, at the beginning of the period of 21 days ending with the date of the accompanying application was the owner (a) of any part of the land to which the application relates, as listed below.

Owner's(a) name	Address at which notice was served	Date on which notice was served
N/A		

+ See Note (a) to Certificate A

OR

CERTIFICATE C

I certify that

- I/The applicant* cannot issued a certificate in accordance with either paragraph (a) or paragraph (b) of Section 66(1) of the Act in respect of the accompanying application.

- I have/The applicant has* given the required notice to the persons specified below, being persons who at the beginning of the period of 21 days ending with the date of the application were owners (a) of any part of the land to which the application relates.

Owner's(a) name	Address at which notice was served	Date on which notice was served
N/A		

(b) Insert description of steps taken.

- I have/The applicant has* taken all reasonable steps open to me/him/her* to find out the names and addresses of the other owners (a) of the land, or of a part of it, but have/has* been unable to do so. These steps were as follows:

(b) .....

.....

(c) Name of local newspaper circulating in the area where the land is situated.

(d) Date of publication (which must be not earlier than the beginning of the period of 21 days ending with the date of the application).

- Notice of the application as attached to this Certificate, has been published in the (c) .....

on (d) .....

1789/b

CERTIFICATE D

I certify that

● I/The applicant cannot issue a certificate in accordance with paragraph (a) of Section 66 of the Act in respect of the accompanying application.

OR

● I/The applicant have/has taken all reasonable steps open to me/him/her to find out the names and addresses of everyone else who, at the beginning of the period of 21 days beginning with the date of application was the owner (a) of any part of the land to which the application relates, but have/has been unable to do so. These steps were as follows:

(b) N/A

(b) *Insert description of steps taken*

● Notice of the application as attached to this Certificate, has been published in the (c) . . . . . .

(c) Insert name of local newspaper circulating in the area where the land is situated.

on (d) . . . . . .

(d) Insert date of publication (which must not be earlier than the beginning of the period of 21 days ending with the date of the application).

ALL APPLICANTS MUST COMPLETE THIS SECTION

Agricultural Holdings Certificate

If any of the site is part of an area of land which is let or there is an agreement to let the land for agricultural purposes to a tenant, it may be an *agricultural holding*. *Further* advice may be obtained from the Department.

One or other section must be crossed through as not applicable.

If the applicant is the sole agricultural tenant he or she must delete the first alternative and insert "not applicable" as the information required by the second alternative.

● None of the land to which the application relates is, or is part of, an agricultural holding.

OR

● I have/The applicant has given the required notice to every person other than my/him/herself who, at the beginning of the period of 21 days ending with the date of the application, was a tenant of an agricultural holding on all or part of the land to which the application relates, as follows:

N/A

Tenant's name	Address at which notice was served	Date on which notice was served

Signed . . . . . .

On behalf of . . . BP OIL UK LTD . . . . . .

Date . . . . . 25/11/00 . . . . . .

TOWN AND COUNTRY PLANNING ACT, 1990
TOWN & COUNTRY PLANNING GENERAL DEVELOPMENT ORDER 1988
Certificate under Section 66

(1) ROMAN ROAD GARAGE

E

ADDRESS (RUNYARDS GARAGE) BASINGSTOKE RD PARISH SHINFIELD

PLOT No. ORD. SHEET No. SU7067-716 (78)

BUILDER

Plan No.	Applicant	Description of Development	Date of Decision	Decision
A 9/58	Runyard Motor Service	advertisment	11. 11. 58	app.
0/259/61	" " "	Warehouse	2. 11. 61	– CA
~~R/282/62~~	~~Messrs Hern Bros~~	~~Const of workshop~~	~~27. 12. 62~~	~~app~~ ~~app~~
0/141/68	Mr P L G Runyard.	Demolish of shop garage & workshop Redev site as Petrol filling st. with repair shop car show room offices & store	5. 9. 68	N/A C/A
722/71	Shell Max & BP	Forecourt Canopy Carwash	withdrawn	
1118/71	" " "	Forecourt & Canopy Carwash etc	25. 11. 71	App C/

DATE OF COMPLETION

MINISTRY DECISION

SPECIAL ORDERS

DRAINAGE

091074

(2) ADDRESS ROMAN ROAD GARAGE BASINGSTOKE Rd. PARISH SHINFIELD

E

PLOT No. ORD. SHEET No. SU7067-71 (78)

BUILDER

Plan No.	Applicant	Description of Development	Date of Decision	Decision
661/72	Shell Max & BP	Canopy Building	11. 5. 72	N/A CA
661/72	" " "	4 Tanks & 1 petrol. See application	8. 6. 72.	N/A CA
810/72	" "	A Ill Box sign & lettering	6. 7. 72	– C/A
*205/73	" "	Ill Display Panel.	22. 3. 73	N/A R
585/73	" "	Ill Advert "	19. 4. 73	N/A R
00648	BP Marketing Ltd	Erection 3x25' flagstaff	16. 5. 75	N/A Re
02536	" " "	O/L Showrm Office ac	15. 5. 75	N/A Re
BR 3115	BP Rentail Ltd	Refuse store	21. 7. 75.	app N
03172	" "	Trash area	4. 9. 75	N/A C
BR 20956	"	MINOR ALTS. TO EL. SHOP	23. 6. 83	APP N/

DATE OF COMPLETION

MINISTRY DECISION * Appeal dismissed 1. 3. 74.

SPECIAL ORDERS

DRAINAGE

~~091073~~

~~1365 3/3~~

(3) ADDRESS ROMAN ROAD GARAGE BASINGSTOKE ROAD PARISH SHINFIELD

PLOT No. ORD. SHEET No.

BUILDER

Plan No.	Applicant	Description of Development	Date of Decision	Decision
20123	BP OIL LTD.	CAR WASH TO REAR	22.9.88	N/A CA
BR23049	"	"	16.7.86	APP N/
26680	"	DIESEL FACILITY + UNDERGROUND TANK	27.11.86	CA
29872	"	RESITE CAR-WASH/RECEIVED SALES BLDG/PETROL STORAGE TANK	17.3.88	CA
29873		ILL. SIGN + SHOP FASCIA SIGN	17.3.88	Re
30585	"	"	10.6.88	CA
31530				
31626				
31809/10	"	ILL SIGNS/REAR SALES CANOPY-2	24.11.88	CA
		UNDERGR. STORAGE TANKS + CAR WASH		
36532	"	CAR WASH/RESITE DIESEL TANKS	12.12.90	CA

DATE OF COMPLETION

MINISTRY DECISION

SPECIAL ORDERS

DRAINAGE

091074 36533 [redacted] DIESEL TANK ETC 21.11.90 C

(4) ADDRESS ROMAN ROAD FILLING STATION PARISH SHINFIELD

PLOT No. ORD. SHEET No.

BUILDER

Plan No.	Applicant	Description of Development	Date of Decision	Decisio
36890	BP OIL	ILL. SIGN & CANOPY SIGNS	4.1.91	C
375-21	"	2 OUTDOOR PAYMENT TERMINALS	3.5.91	G
96/63712/A				
97/65348/F	W/DR.			
97/66349/F	BP OIL	REDEV. PETROL FILLING ST.	24.2.98	Re
98/67784/F	"	Prov. New Sales Bld. Pumps + canopy car-jet wash	21.7.98	RE
99/69190/F	BP OIL LTD.	Redev. of P.S. & - new rolls canopy	21.5.99	R
	BP OIL UK LTD	Pump islands canopy car + jet wash		
F/1999/0238	BP OIL UK LTD	Proposed Install. LPG Compound	21.03.00	C

DATE OF COMPLETION

MINISTRY DECISION 66349 & 67784 - APPEALS DISMISSED - 5-10-98

SPECIAL ORDERS 69190 - APPEAL ALLOWED - 22.10.99

DRAINAGE

091074

769a

WOKINGHAM DISTRICT COUNCIL
PLANNING APPLICATION

PART 1

APPLICATION FOR PERMISSION TO CARRY OUT DEVELOPMENT - TOWN AND COUNTRY PLANNING ACTS

Please answer ALL QUESTIONS in BLOCK LETTERS. If a question is not applicable, answer N/A in space. Please submit SIX copies of this form and plans to:-

THE DISTRICT PLANNING OFFICER
WOKINGHAM DISTRICT COUNCIL
PLANNING DEPARTMENT
P O Box No. 157
COUNCIL OFFICES
SHUTE END
WOKINGHAM
BERKSHIRE, RG40 1WR

FOR OFFICE USE ONLY

18.DEC.2000* 3036

1.	APPLICANT'S NAME	BP OIL UK LIMITED
	ADDRESS	500-600 WITAN GATE, MILTON KEYNES. BUCKS.
	POST CODE	MK9 1ES PHONE 01908 853000.
	AGENT'S NAME	MR S PARHAR
2. If the applicant has an agent, all correspondence will be sent to the agent	ADDRESS	AS APPLICANT.
	POST CODE	PHONE 01908 853451
3. On the plans show the SITE outlined in RED Show also OTHER land in the applicant's ownership or control in BLUE.	SITE LOCATION	ROMAN ROAD S/STN, BASINGSTOKE RD, THREE MILE CROSS, READING.
4. WHAT IS THE APPLICATION FOR ? Give brief details and state for what purpose this site and any buildings will be used.		INSTALLATION OF A JET WASH FACILITY.
5. Give the area in hectares or part of a hectare	AREA OF SITE	
6. State the applicant's interest in the land e.g. owner, prospective purchaser, lessee	OWNER	
7. List all the plans and drawings submitted with the application	PLANS/DRAWINGS	OS MAP EXTRACT, DRWG 10137-85 PHOTOGRAPHS OF TYPICAL JET WASH FACILITY AND FLOODLIGHT DETAILS

8. DOES THE APPLICATION INVOLVE ANY OF THE FOLLOWING ?

Tick the boxes(x)

CHANGE OF USE ☐ REDEVELOPMENT ☐

ERECTION OF NEW BUILDING ☐ ALTERATION or EXTENSION ☐

9. WHAT TYPE OF APPLICATION IS THIS ? Tick one box only

OUTLINE PERMISSION ☐ See question 10

FULL PERMISSION ☑

APPROVAL OF DETAILS/RESERVED MATTERS ☐ State relevant outline permission number Also complete Question 10

TEMPORARY PERMISSION ☐ State period required

RELAXATION OF CONDITIONS ☐ State relevant application number Conditions to be relaxed

10. IF THIS IS AN OUTLINE APPLICATION OR AN APPROVAL OF RESERVED MATTERS, which details, if any, do you wish to be considered as part of this application ? N/A

SITING ☐

EXTERNAL APPEARANCE ☐ DESIGN ☐

MEANS OF ACCESS ☐ LANDSCAPING ☐

11. WHAT IS THE EXISTING USE OF THE LAND AND/OR BUILDING(S) e.g. residential, industrial, etc. If the site is vacant say so, and also state its previous use and when that ceased.

EXISTING SERVICE STATION 1769b

12. DOES A PUBLIC RIGHT OF WAY CROSS OR ABUT THE SITE OR THE PROPOSED ACCESS?

YES/NO If yes, show existing route(s) and any proposed alternatives on the plans

13. ARE THERE ANY TREES ON THE SITE?
IF YES, ARE ANY TO BE FELLED? NO.

YES/NO If yes, please show their positions, spread and species on the plans and which, if any, are to be felled.

14. STATE EXTERNAL MATERIALS TO BE USED.

SEE DRWG 10137-85

15. HOW WILL THE SITE BE ENCLOSED?
Say whether walls, fences or hedges, and give height, colour and materials. If the site is divided into plots, say how each is to be enclosed.

EXISTING.

16. HOW WILL SURFACE WATER BE DISPOSED OF?

AS EXISTING.

17. HOW WILL FOUL SEWAGE BE DISPOSED OF?

To existing system YES/NO

If no, please give details

18. WHAT ARE THE ACCESS ARRANGEMENTS?
AS EXISTING
AS PROPOSED
Give details of pedestrian and vehicular access

AS EXISTING.

19. HAS PROVISION BEEN MADE FOR THE DISABLED?
See notes for applicants

N/A.

20. IF THIS PROPOSAL INVOLVES RESIDENTIAL DEVELOPMENT OR THE LOSS OF RESIDENTIAL UNITS, COMPLETE THE FOLLOWING TABLE N/A

	No. OF DWELLINGS/HABITABLE ROOMS PROPOSED		TO BE RETAINED		TO BE LOST	
HOUSE	/	*	/	*	/	*
BUNGALOW	/	*	/	*	/	*
FLAT/MAISONETTE	/	*	/	*	/	*
OTHER	/	*	/	*	/	*

*STATE No. OF HABITABLE ROOMS

21. DOES THE PROPOSAL INVOLVE ANY NON-RESIDENTIAL BUILDING OR USE?

YES/NO If YES, complete Part 2 of the form

22. DOES THE PROPOSAL INVOLVE THE WINNING, WORKING OR PROCESSING OF MINERALS: THE DISPOSAL OF MINERAL WASTE, OR THE DEPOSIT OR PROCESSING OF REFUSE AND WASTE MATERIALS?

YES/NO If YES, please ask for and complete Part 3 of the form

23. STATE THE FEE ENCLOSED WITH THIS APPLICATION
The current scale of fees is enclosed. If you believe a reduced fee or no fee is payable, say why.

£95-00

I hereby apply for permission in respect of the particulars described above and in the attached plans and drawings. If planning permission is granted, the development must be carried out strictly in accordance with the approved plans. Failure to do so could result in enforcement action being taken. Permission under the Town & Country Planning Acts does not obviate the possible need to apply for Building Regulations approval.

SIGNED [signature] ON BEHALF OF BP OIL UK LTD DATE 25/11/00

Before submitting the application check that it is complete, that all questions have been answered and that the site boundary and the new work are clearly edged in red on the plans. Every application must be accompanied by the appropriate certificate and fee. See "NOTES TO HELP APPLICANTS".

1769c

PLANNING APPLICATION

PART 2

This part of the form need only be completed if the application involves non-residential development. Please answer all questions in print or block letters. If the answer is not applicable, write N/A in the space. You may wish to amplify your answers in a covering letter.

24. STATE THE GROSS FLOOR SPACE (by external measurement) OF ALL BUILDINGS TO WHICH THIS APPLICATION REFERS. Please give all floor areas in SQUARE METRES.

	USE CLASS	Existing floor space: Retained in existing use	Existing floor space: Lost by change of use or demolition	Proposed additional floorspace created by: New building	Proposed additional floorspace created by: Change of use
A1	SHOPS				
A2	FINANCIAL AND PROFESSIONAL SERVICES				
A3	FOOD AND DRINK				
B1(a)	OFFICE (other than A2)				
B1 (b)	RESEARCH AND DEVELOPMENT				
B1 (c)	LIGHT INDUSTRIAL				
●	GENERAL INDUSTRIAL				
B3-7	SPECIAL INDUSTRIAL				
B8	STORAGE OR DISTRIBUTION				
C1	HOTELS AND HOSTELS				
C2	RESIDENTIAL INSTITUTIONS				
D1	NON-RESIDENTIAL INSTITUTIONS				
D2	ASSEMBLY AND LEISURE				
OTHER	Please Specify				
OTHER	Please Specify				
	TOTAL				

N/A.

25. IF C1 OR C2 USE IS PROPOSED, PLEASE STATE NUMBER OF BED SPACES — N/A

● WHAT PROVISION IS BEING MADE FOR PARKING?

	Cars	Lorries
Existing	N/A	
Proposed	N/A.	

27. DESCRIBE THE ACTIVITY OR PROCESSES TO BE CARRIED ON
Please provide details of any equipment, plant or machinery to be installed and any end products. You may wish to amplify your answers in a covering letter.

JET WASH INSTALLATION.

28. WHO WILL OCCUPY THE PREMISES?
a) Give the name and current operating address of the proposed occupier
b) Will these premises be vacated?

EXISTING - BP OIL UK LTD.

29. IF KNOWN, HOW MANY PEOPLE ARE LIKELY TO BE EMPLOYED ON SITE AFTER COMPLETION OF THE DEVELOPMENT?

Existing Staff	Transferred Staff	New Staff	Total
EXISTING	N/A	N/A	N/A.

30. DOES THE PROPOSAL INVOLVE THE USE OR STORAGE OF ANY OF THE HAZARDOUS SUBSTANCES LISTED IN THE NOTES?
If so, state this material, the quantity and method of storage.

NO.

Before submitting the application check that it is complete, that all questions have been answered and that the site boundary and the new work are clearly edged in red on the plans. Every application must be accompanied by the appropriate certificate and fee. See "NOTES TO HELP APPLICANTS'.

1769d

YOUR PLANNING APPLICATION

WHY DO YOU NEED TO MAKE A PLANNING APPLICATION ?

New buildings, major alterations and enlargement of existing buildings, and many changes in the use of buildings and land need planning permission.
The Town and Country Planning Acts impose a duty on Local Authorities to control these changes, and this means that a balance has to be found between the need and pressure for change, and the desire to protect the character of settlements and the countryside.
The merits of each application are, therefore, carefully examined.

WHAT ELSE MAY YOU HAVE TO DO ?

Listed Building Consent:	for works to a Listed Building; or for demolition works on land within the curtilage of a Listed Building or within a Conservation Area.
Advertisement Consent:	for the display of advertisements or signs
Building Regulation Approval:	for most new building or construction work.

Special forms are available for these types of applications.

You should also check whether there are any other regulations with which you may need to comply.

WHAT HAPPENS TO THE APPLICATION ?

It will first be checked to see if it is complete and if it is, it will be registered.

Consultations will be carried out with public and other bodies, such as the Highway Authority, or Local Parish Councils.

Publicity may be given to allow local people the opportunity to comment on your proposals.

The application will be considered in relation to the Council's planning policies and guidelines, the past history of decisions on that site or in the locality, other standards (such as parking, or visibility at road junctions), and any other material considerations.

The site will be visited by a Planning Officer You may be asked to submit more information, or to amend your application.

The application will then be considered either by a Planning Committee or Sub Committee (made up of Councillors) or by the Chief Officer responsible for planning matters. Objections to an application will be taken into consideration by the Committee or the Chief Officer.

Shortly after the application has been determined, you will receive a Decision Notice.

HOW LONG WILL IT TAKE ?

An application will generally be determined within eight weeks although a longer period may sometimes be required for a complicated application.

WHAT SORT OF DECISION CAN BE MADE ?

Your application may be approved.

Your application may be approved subject to certain conditions. These could impose restictions on the use of land or buildings, or require further details to be approved at a later stage, (e.g. materials or landscaping).
You may appeal against the conditions, but this opens the entire permission to review by the Secretary of State.

Your application may be refused. The reason will be listed on the Decision Notice.

WHAT HAPPENS IF THE APPLICATION IS REFUSED ?

You have the right to appeal against the refusal to the Secretary of State, but you have to do that within six months. Appeals can be dealt with by written representations by both sides, or by a Public Inquiry.
You may ask the Planning Officer whether an amended application would be more likely to receive planning permission.

DATA PROTECTION ACT 1984

'Information contained in this form is likely to be personal data within the terms of the Data Protection Act 1984, and as such will be held by the Council on computer (such as the PLANAPS applications processing system) and may be used by the Council only for purposes registered under the terms of the Data Protection Act.'

CONDITION MONITORING RECORD SHEET

APPLICATION NO: **F/2000/3036**
CASE OFFICER: **Elaine Connor**
SECTION 106 AGREEMENT Yes ☐ No ☐

STAGE OF DEVELOPMENT	CONDITION NUMBER	DATE CONDITION DISCHARGED	DATE COMPLIANCE OBSERVED	DATE BREACH OBSERVED
PRIOR TO COMMENCEMENT				
COMMENCEMENT				
DURING CONSTRUCTION				
COMPLETION				

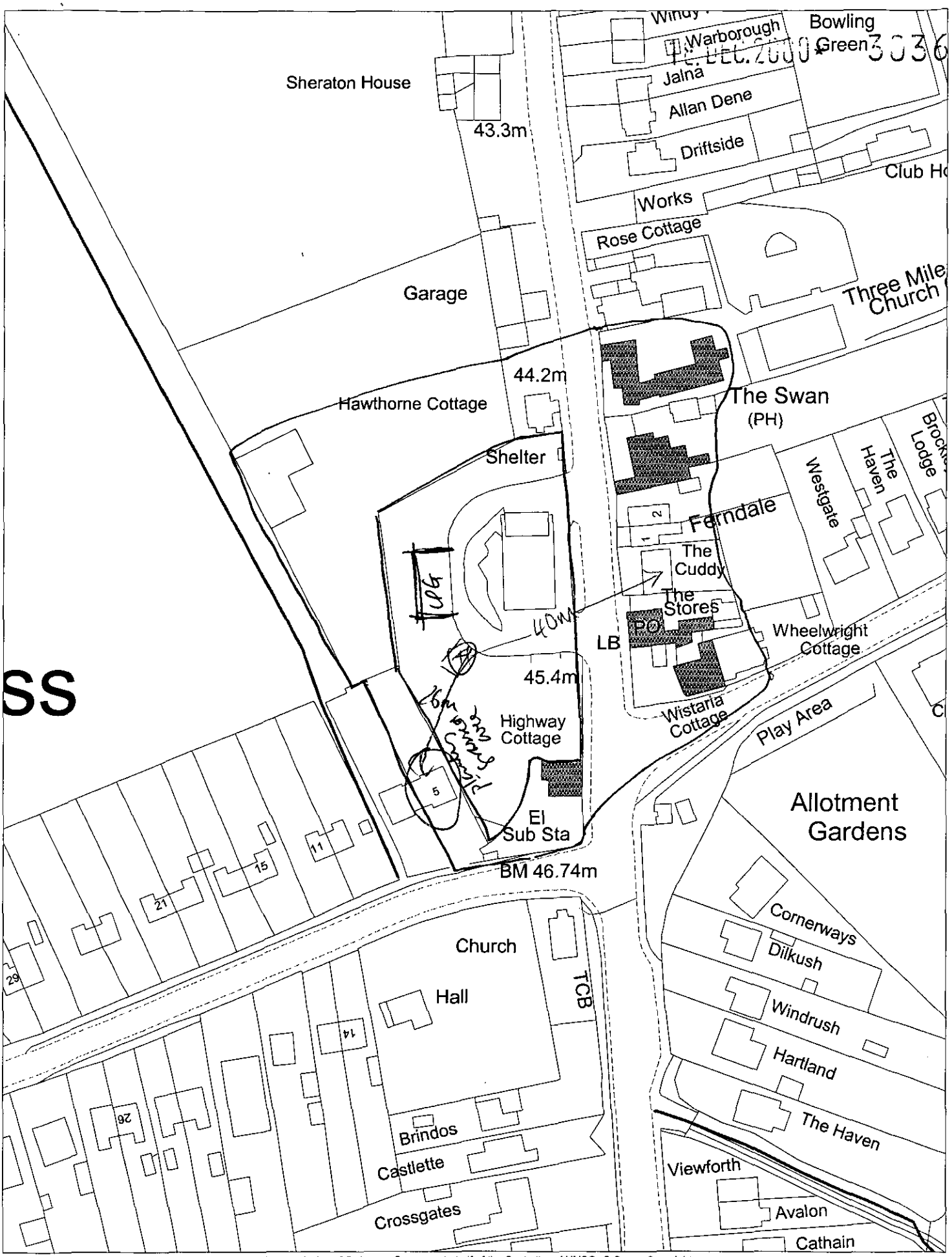

This map is based upon Ordnance Survey material with the permission of Ordnance Survey on behalf of the Controller of HMSO. © Crown Copyright.
Unauthorised reproduction infringes Crown Copyright and may lead to prosecution or civil proceedings.Wokingham District Council Licence LA086134

Development Control Section, Environmental Services, Wokingham District Council.
8 December 2000 Scale: 1 : 1250

18 DEC 2000* 3036

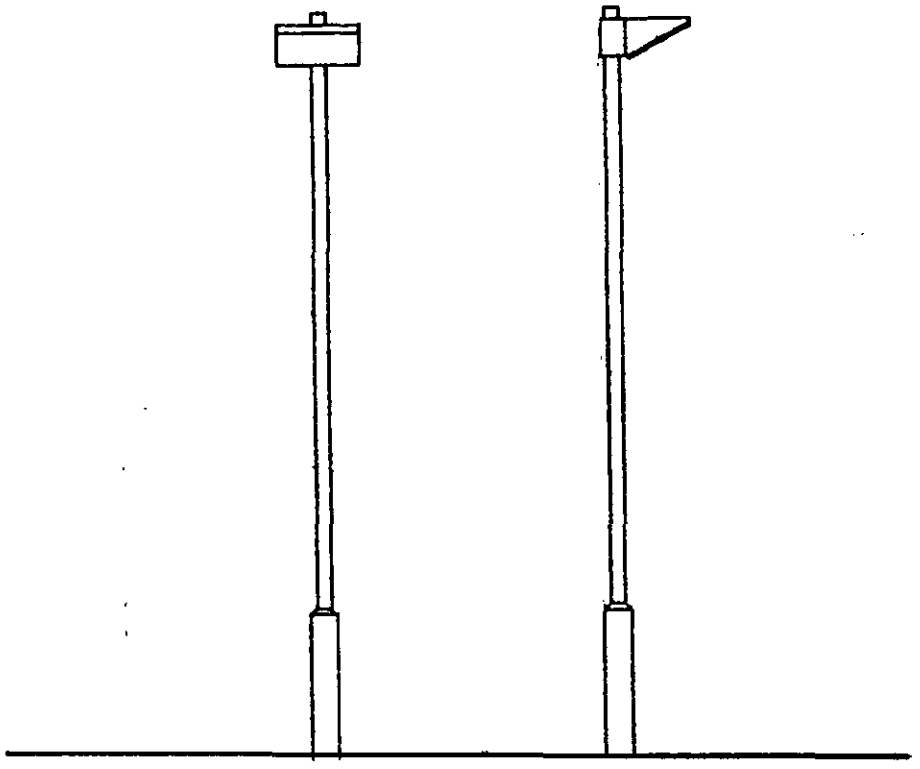

TYPICAL FLOODLIGHT DETAIL
1:50
(See Layout Plan For Location)

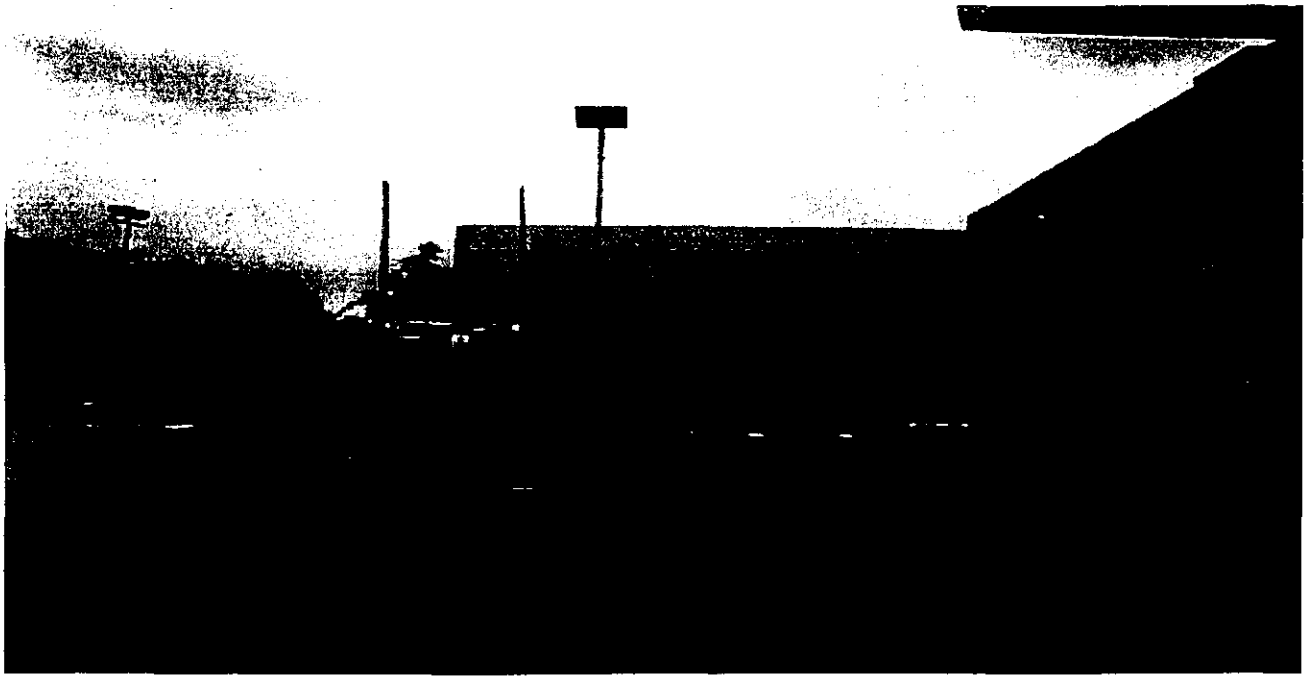



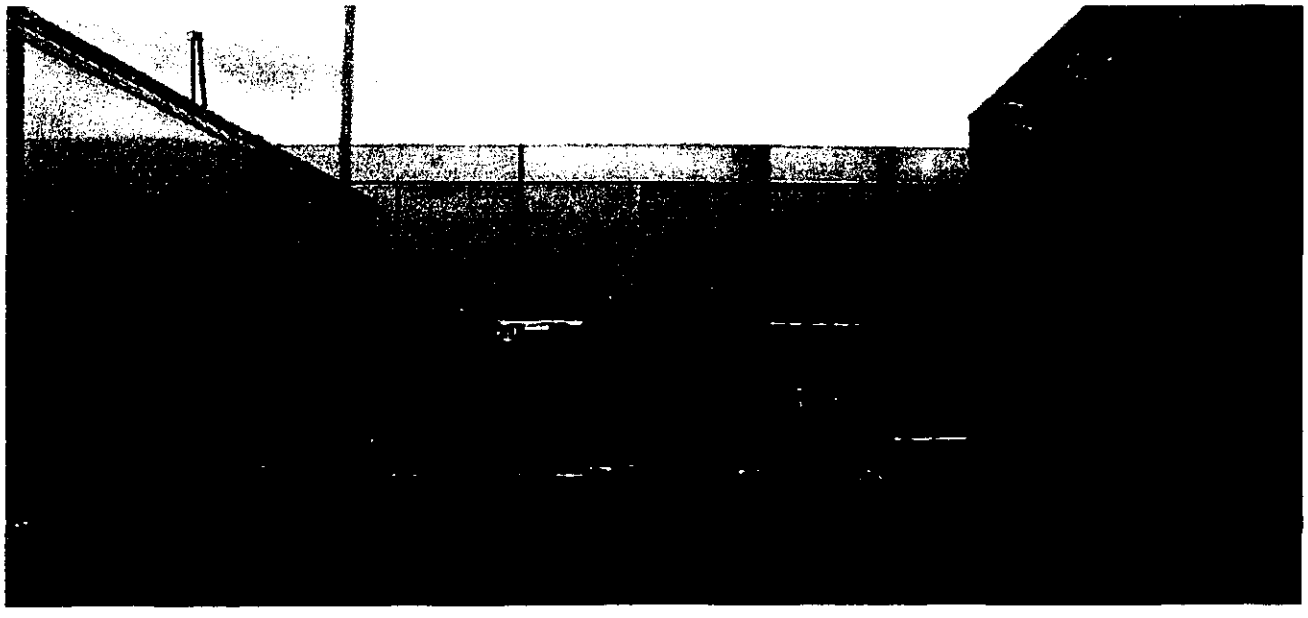

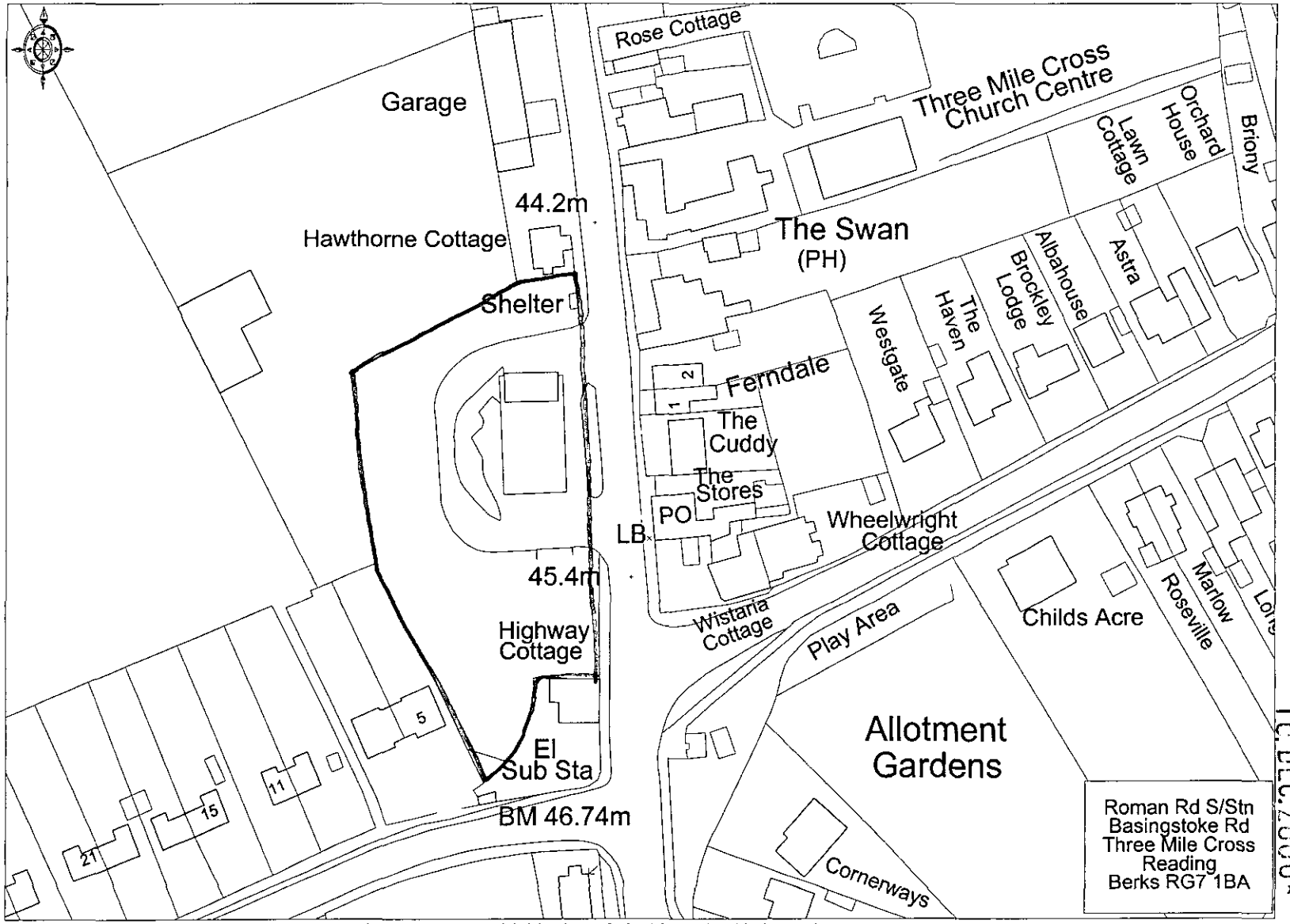

© Crown copyright 2000 All rights reserved. Based on Ordnance Survey digital data Survey Scale - 1:2500 Plotted Scale - 1:1250
(Scales other than at Survey Scale should not be used for accurate measurement). Business occupancy data ©2000 Thomson Directories Ltd.

Ordnance Survey
Value Added Reseller

18 DEC 2000*

3036