Land West of Park Lane
Charvil

Arboricultural Method Assessment

December 2025
12671_AMS.001 Rev B

Project Details	
Client:	Bellway Homes Limited (Thames Valley)
Project:	Land West of Park Lane, Charvil
Report Title:	Arboricultural Method Statement
Project Number:	12671
File Reference:	12671_AMS.001 Rev B
Date:	08/12/2025

Copyright

The copyright of this document remains with Aspect Arboriculture Ltd. All rights reserved. The contents of this document therefore must not be copied or reproduced in whole or in part for any purpose without the written consent of Aspect Arboriculture Ltd.

Limitations

This assessment has been prepared in respect of the proposed development and should not be interpreted as a report on tree health and safety. Reasonable effort has been made to identify visible defects whilst undertaking the tree survey; trees are however, prone to natural failure without warning therefore no guarantee can be made as to the absolute safety of any of the trees surveyed. Aspect's opinion of tree condition and structural potential is therefore valid for a limited period of 12 months from the date of inspection. Validity is assumed in the absence of inclement weather and no change to the trees' existing context. Reliance should not be given to comments made in respect of other disciplines i.e. landscape, ecology or civil engineering without first consulting an appropriate expert.

Liability

This report has been prepared for the exclusive use of the commissioning client and unless otherwise agreed in writing by Aspect Arboriculture Ltd. no other party may use, or rely on the contents of the report. No liability is accepted by Aspect Arboriculture Ltd. for any use of this report, other than for the purposes for which it was originally prepared and provided. No warranty, express or implied, is made as to the advice in this report. The content of this report is partly based on information provided by third parties. Unless otherwise stated, information obtained from any third party has not been independently verified by Aspect Arboriculture Ltd.

Contact Details

Aspect Arboriculture Ltd.
Hardwick Business Park I Noral Way I Banbury I Oxfordshire I OX16 2AF
t 01295 276066 f 01295 265072 e info@aspect-arbor.com
w www.aspect-arbor.com

Contents

Text:

1 Introduction 3

1.1 Background 3
1.2 Statutory Designations 4
1.3 Scope 4
1.4 Limitations 4

2 Essential Works 5

2.1 Tree Protection Plan 5
2.2 Tree Removals 5
2.3 Pruning Works 6
2.4 Protective Barriers 6
2.5 Supervised Excavation 6
2.6 Proposed Order of Works 8
2.7 Site Managers Point of Contact for Arboricultural Input 8

3 Conclusions 9

Tables:

Table 1. Tree Removals by BS5837:2012 Category.

Appendices:

Appendix A: Tree Protection Plan (12671 TPP 01 Rev B)
Appendix B: Works Auditing Schedule (12671 WAS 01)
Appendix C: Tree Survey Schedule (12671 TS 01)
Appendix D: Barrier Specifications

1 Introduction

1.1 Background

1.1.1 Aspect Arboriculture are commissioned by Bellway Homes Limited (Thams Valley) to prepare an Arboricultural Method Statement and Tree Protection Plan (hereafter the AMS and TPP) to inform proposals for construction of development granted planning permission under application 232704. The purpose of the document is to clearly identify the extent of tree removal and retention put forward and to demonstrate how retained trees will be protected during construction, pursuant to condition 32.

1.1.2 Condition 32 reads:

'Protection of Trees

a) As a part of any reserved matters applications dealing with 'Landscaping' and 'Layout', an updated Tree Survey, Tree Protection Plan, Arboricultural Impact Assessment and Arboricultural Method Statement which provides for the retention and protection of trees, shrubs and hedges growing on or adjacent the site in accordance with BS5837: 2012 has been submitted to and approved in writing by the local planning authority (the Approved Scheme). The Arboricultural Impact Assessment shall ensure development proposals including SuDS requirements have been fully considered in relation to the tree constraints.

b) The tree protection measures approved shall be implemented in complete accordance with the Approved Scheme for the duration of the development (including, unless otherwise provided by the Approved Scheme) demolition, all site preparation work, tree felling, tree pruning, demolition works, soil moving, temporary access construction and or widening or any other operation involving use of motorised vehicles or construction machinery.

c) No development (including any tree felling, tree pruning, demolition works, soil moving, temporary access construction and or widening or any other operation involving use of motorised vehicles or construction machinery) shall commence until the local planning authority has been provided (by way of a written notice) with a period of no less than 7 working days to inspect the implementation of the measures identified in the Approved Scheme on-site.

d) No excavations for services, storage of materials or machinery, parking of vehicles, deposit or excavation of soil or rubble, lighting of fires or disposal of liquids shall take place within an area designated as being fenced off or otherwise protected in the Approved Scheme.

e) The fencing or other works which are part of the Approved Scheme shall not be moved or removed, temporarily or otherwise, until all works including external works have been completed and all equipment, machinery and surplus materials removed from the site, unless the prior approval of the local planning authority has first been sought and obtained.

Reason: To secure the protection throughout the time that the development is being carried out of trees shrubs or hedges growing within or adjacent to the site which are of amenity value to the area, and to allow for verification by the local planning authority that the necessary measures are in place before development and other works commence. Relevant policy: Core Strategy policy CP3 and Managing Development Delivery Local Plan policies CC03 and TB21.'

1.1.3 The AMS will be submitted to, and approved by, Wokingham Borough Council, prior to the commencement of any construction works occurring on site. Once approved, the safeguarding measures and works should be implemented as specified and maintained to the Council's satisfaction until completion of development works.

1.1.4 The confident protection of retained trees will be achieved through the use of the appended Tree Protection Plan (appendix A) and Works Auditing Schedule (appendix B), alongside other supporting documents included within appendices C and D.

1.2 Statutory Designations

1.2.1 Background checks have confirmed that the application area does not occur within a Conservation Area (Wokingham Borough Council, cited November 2025).

1.2.2 Checks of the Council's online database have confirmed that a number of trees on the northern boundary of the application area are scheduled within Tree Preservation Order 275/1984 (Wokingham Borough Council, cited November 2025). Protected trees are identified within the Tree Protection Plan at appendix A and include Oaks T1, T2, T31, T32 and T237.

1.3 Scope

1.3.1 This work relates to arboriculture therefore reliance should not be given to comments made in respect of other disciplines i.e. civil engineering or construction phasing, without first referencing an appropriate expert.

1.4 Limitations

1.4.1 The document has been prepared to inform safeguarding measures during development and should not be interpreted as a report on tree health and safety. Reasonable effort has been made to identify visible defects whilst carrying out the tree survey, however trees are prone to natural failure without warning; no guarantee can be made as to the absolute safety of any of the trees surveyed.

1.4.2 Aspect's opinion of tree condition and structural potential is valid for limited period from the date of survey. Validity is assumed in the absence of inclement weather and no change to the tree's existing context. A copy of the site's tree survey information is provided within appendix C.

2 Essential Works

2.1 Tree Protection Plan

2.1.1 The Tree Protection Plan (TPP) provided in appendix A will be relied upon during construction of the development. It must be read in conjunction with the entirety of this document.

2.1.2 To prevent avoidable damage occurring to retained trees or erroneous tree loss, a scaled A1 copy of the TPP, accompanied by a copy of this document will be provided to the Site Manager. This will ensure they are able to:

- Clearly identify all retained trees;
- Identify the correct locations for tree protection barriers;
- Identify features of the site that must be prepared/installed under an arboricultural watching brief;
- Request attendance of the Project Arboriculturist on site for site monitoring and to provide advice in case of any emerging issues;
- Demonstrate compliance with the Council's consent for the development by safeguarding trees which are to be retained and enable the Project Arboriculturist to evidence this by completing the Works Auditing Schedule (appendix B).

2.2 Tree Removals

2.2.1 To implement the proposed development, it will be necessary to remove trees detailed within Table 1 below.

2.2.2 Table 1: Tree Removals by BS5837:2012 Category.

Category A	Category B	Category C
None	None	**G6+Δ** **G12** Goat Willow **G14+Δ** **G15+Δ**

+ Denotes assemblage of two or more species (refer to appendix C)
Δ Denotes partial clearance of scrub

2.2.3 Trees to be removed will be spray marked with a red flash by the project arboriculturist. The presence of the appointed arboricultural contractor, Site Manager and Arboricultural Officer are also recommended during this process to safeguard against erroneous felling.

2.2.4 Felling works should be timed to avoid the main nesting season for birds between 1st March and 31st August. If scheduled within this period an ecologist must be present to advise on any necessary protective measures, and to confirm that tree works are not likely to cause disturbance to nesting birds.

2.3 Pruning Works

2.3.1 It will not be necessary to prune any retained trees to accommodate the development proposal.

2.3.2 Should any unforeseen pruning requirements emerge during construction, the project arboriculturist will provide a written specification for agreement with the Council's Arboricultural Officer. If required, a site meeting will be organised to agree on a suitable specification of works.

2.3.3 Should any pruning works become necessary, they must be carried out in accordance with BS3998:2010. A qualified and competent contractor should be employed to ensure that cuts are performed correctly and positioned so as to avoid future structural defects or physiological issues, facilitate growth and maintain aesthetic value.

2.3.4 Works should also be timed to avoid the main nesting season for birds between 1st March and 31st August. If scheduled within this period an ecologist must be present to advise on any necessary protective measures, and to confirm that tree works are not likely to cause disturbance to nesting birds.

2.4 Protective Barriers

2.4.1 Tree protection barriers are required to safeguard retained trees from damage during construction works. Protective barriers must be installed before works commence as illustrated on the Tree Protection Plan provided at appendix A. The location for protective barriers has been informed by retained trees' canopy extents and root protection areas (RPA) and are shown within appendix A with a dark blue line.

2.4.2 The Site Manager will be responsible for arranging attendance of the Project Arboriculturist, for the purpose of setting out barriers, and for their monitoring during the development; issues will be resolved on site and reported to the Council's Arboricultural Officer by the Project Arboriculturist.

2.5 Supervised Excavation

To implement the development works, it will be necessary to undertake localised excavation work within the RPA of retained tree T222, to accommodate the edge of the proposed attenuation basin (illustrated within the TPP at appendix A with an orange wash).

2.5.1 To avoid detriment occurring to tree T222 excavation works within the tree's RPA must be carried out sensitively and under arboricultural supervision, adopting the principles within section 7.2 of BS5837:2012.

2.5.2 Accordingly, during supervised excavation works within the RPA of T222, the following procedure will be adopted:

I. The breaking up and clearance of the existing soils must be undertaken under arboricultural supervision, using a low impact method of excavation, utilising hand tools, an air-spade, or a vacuum excavator.

II. If necessary, roots that are less than 25mm diameter will be pruned back, preferably to a side branch, using sharp cutting tools in accordance with best practice i.e. using secateurs or pruning saw.

III. During the works the protective bark of larger roots is not to be damaged, until the project arboriculturist has judged whether they can be retained or not.

IV. No roots over 25mm will be pruned without approval of the appointed Project Arboriculturist as they may be integral to tree health and stability. If it becomes necessary to prune roots over 25mm diameter to accommodate site features, the Project Arboriculturist will provide the Developer and the Council's Arboricultural Officer with appropriate recommendations for remedial action/ management.

V. Any exposed roots which can be retained will be covered in hessian or clean topsoil to protect from dehydration and temperature flux. Hessian is to be removed prior to backfilling.

VI. Areas adjacent to roots that are to be filled with concrete will be lined with an impermeable membrane to prevent concrete leachate coming into contact with tree roots.

VII. Any use of an excavator to complete excavations will occur from outside the trees' RPA (which will be spray-marked on the ground in advance of the works taking place). A toothless bucket will be utilised at all times.

VIII. A record of exposed roots will be made and accompanied by a photographic log.

IX. Should any issues be raised during the works then the Project Arboriculturist will inform the Developer and the Council's Arboricultural Officer, indicating the nature of the problem and recommendations for remedial action (if required).

X. Upon request, written confirmation of the works being undertaken to a satisfactory standard can be provided to the Developer and the Council's Arboricultural Officer by the Project Arboriculturist.

2.6 Proposed Order of Works

2.6.1 The following order of works must be followed:

i. Pre-commencement site meeting between the Project Arboriculturist, Site Manager and the Council's Arboricultural Officer. Stages of arboricultural auditing/monitoring requirements will be identified/agreed.

ii. Necessary tree removals to be carried out prior to installation of tree protection barriers and commencement of works in the vicinity.

iii. Tree protection barriers and ground protection to be installed following removals and prior to works commencing in the vicinity. Upon request, barrier positions can be set-out by the Project Arboriculturist, as detailed within this document.

iv. The Council's Arboricultural Officer shall be informed of the proposed commencement date as soon as possible, to allow the inspection of protection measures.

v. The Site Manager will assume responsibility for arranging the attendance of the Project Arboriculturist to oversee, relocation of barriers and for the supervision of construction works within retained trees' RPAs, as detailed at within the Works Auditing Schedule (appendix C).

vi. The Site Manager will also assume responsibility for arranging attendance of the Project Arboriculturist for the monitoring of barriers at appropriate intervals for the duration of the development works. Erection of barriers and monitoring is included within the Works Auditing Schedule (appendix C).

2.7 Site Manager's Point of Contact for Arboricultural Input:

2.7.1 Patrick Haythornthwaite (Aspect Arboriculture)

Principal Arboricultural Consultant

Telephone: 01295 276066

Email: patrick.haythornthwaite@aspect-arbor.com

2.7.2 Justin Hodges (Aspect Arboriculture)

Arboricultural Consultant

Telephone: 01295 276066

Email: Justin.Hodges@aspect-arbor.com

3 Conclusions

3.1.1 This document has been prepared to inform the residential development of land west of Park Lane, Charvil, granted planning permission under 232704. Pursuant to condition 32, the document has been prepared to demonstrate how retained trees will be safely integrated as part of the scheme, informed by guidance provided in BS5837:2012 including details of the site's existing trees (undertaken in October 2025).

3.1.2 Pursuant to the instruction, this document and its supporting work (Appendices A - D) identifies all aspects of the proposals that must be managed to facilitate the confident protection of retained trees during construction.

3.1.3 To ensure confident tree retention, siting of tree protection barriers and the specified construction works must be audited by the Project Arboriculturist; the outcome of these works will be reported to the Council's Arboricultural Officer on completion. These elements are specified within the Works Auditing Schedule (appendix B).

3.1.4 It is Aspect's opinion that, subject to strict adherence to this document, the development can be implemented without incurring harm to retained trees.

APPENDICES

APPENDIX A

TREE PROTECTION PLAN (12671 TPP 01 Rev B)

1:1500 @ A3

0m 10m 20m 50m

KEY:

- Site Boundary
- Tree Numbers
- Tree Canopies
- Category 'U' Trees
- Category 'A' RPA
- Category 'B' RPA
- Category 'C' RPA
- Ancient Woodland
- Ancient Woodland 15m Buffer
- Tree Preservation Order
- Trees to be Removed
- Tree Protection Barrier
- Tree Protection Barrier (2nd Position)
- Supervised Excavation

Note: Trees 4-8, 12, 31-33, 69-79, 126-140, 143-146, 163, 210-212, 234 have been plotted using measurements onsite in conjunction with aerial imagery. Their locations were not recorded on the topographical survey of the site (drawing ref: T0944-Park Lane Charvil.dwg).

Note: The RPA footprint for Trees 1, 2, 31, 32, 210, 218, 221, 222, 236, 237 have been displaced to allow for the effect of the adopted highway and existing building foundations. The surface area of the RPA has not been reduced.

REV	DATE	NOTE	Drawn

REVISIONS

aspect arboriculture

TITLE

Park Lane, Charvil
Tree Protection Plan

CLIENT

Bellway

SCALE	DATE	DRAWN
1:1500 @ A3	DEC 2025	GW

DRAWING NUMBER	REVISION
12671 TPP 01 Rev B (Overview)	B

Based on: 5.2208.2000 rev I - Proposed Site Layout.dwg
RECORD P25-0896 SK100 P2 Drainage Strategy.dwg

Default Barrier Specification, cited BS 5837:2012

Key
1 Standard scaffold poles
2 Heavy gauge 2m tall galvanized tube and welded mesh infill panels
3 Panels secured to uprights and cross-members with wire ties
4 Ground level
5 Uprights driven into the ground until secure (minimum depth 0.6m)
6 Standard scaffold clamps

1:1000 @ A3

0m 10m 20m 40m

KEY:

- Site Boundary
- Tree Numbers
- Tree Canopies
- Category 'U' Trees
- Category 'A' RPA
- Category 'B' RPA
- Category 'C' RPA
- Ancient Woodland
- Ancient Woodland 15m Buffer
- Tree Preservation Order
- Trees to be Removed
- Tree Protection Barrier
- Tree Protection Barrier (2nd Position)
- Supervised Excavation

Note: Trees 4-8, 12, 31-33, 69-79, 128-140, 143-146, 163, 210-212, 234 have been plotted using measurements onsite in conjunction with aerial imagery. Their locations were not recorded on the topographical survey of the site (drawing ref: T0944-Park Lane Charvil.dwg).

Note: The RPA footprint for Trees 1, 2, 31, 32, 210, 218, 221, 222, 236, 237 have been displaced to allow for the effect of the adopted highway and existing building foundations. The surface area of the RPA has not been reduced.

REV	DATE	NOTE	Drawn

REVISIONS

aspect arboriculture

TITLE
Park Lane, Charvil
Tree Protection Plan

CLIENT
Bellway

SCALE	DATE	DRAWN
1:1000 @ A3	DEC 2025	GW

DRAWING NUMBER	REVISION
12671 TPP 01 Rev B (1/3)	B

Based on: 5.2208.2000 rev I - Proposed Site Layout.dwg
RECORD P25-0896 SK100 P2 Drainage Strategy.dwg

1:1000 @ A3

0m 10m 20m 40m

KEY:

- Site Boundary
- Tree Numbers
- Tree Canopies
- Category 'U' Trees
- Category 'A' RPA
- Category 'B' RPA
- Category 'C' RPA
- Ancient Woodland
- Ancient Woodland 15m Buffer
- Tree Preservation Order
- Trees to be Removed
- Tree Protection Barrier
- Tree Protection Barrier (2nd Position)
- Supervised Excavation

Note: Trees 4-8, 12, 31-33, 69-79, 128-140, 143-146, 163, 210-212, 234 have been plotted using measurements onsite in conjunction with aerial imagery. Their locations were not recorded on the topographical survey of the site (drawing ref: T0944-Park Lane Charvil.dwg).

Note: The RPA footprint for Trees 1, 2, 31, 32, 210, 218, 221, 222, 236, 237 have been displaced to allow for the effect of the adopted highway and existing building foundations. The surface area of the RPA has not been reduced.

REV	DATE	NOTE	Drawn

REVISIONS

aspect arboriculture

TITLE

Park Lane, Charvil
Tree Protection Plan

CLIENT

Bellway

SCALE	DATE	DRAWN
1:1000 @ A3	DEC 2025	GW

DRAWING NUMBER	REVISION
12671 TPP 01 Rev B (2/3)	B

Based on: 5.2208.2000 rev I - Proposed Site Layout.dwg
RECORD P25-0896 SK100 P2 Drainage Strategy.dwg

Default Barrier Specification, cited BS 5837:2012

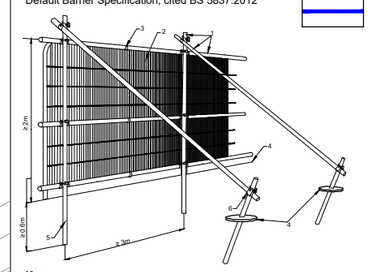

Key

1 Standard scaffold poles
2 Heavy gauge 2m tall galvanized tube and welded mesh infill panels
3 Panels secured to uprights and cross-members with wire ties
4 Ground level
5 Uprights driven into the ground until secure (minimum depth 0.6m)
6 Standard scaffold clamps

1:1000 @ A3

0m 10m 20m 40m

KEY:

- Site Boundary
- 15 Tree Numbers
- Tree Canopies
- [8] Category 'U' Trees
- Category 'A' RPA
- Category 'B' RPA
- Category 'C' RPA
- Ancient Woodland
- AWB Ancient Woodland 15m Buffer
- TPO Tree Preservation Order
- 8 Trees to be Removed
- Tree Protection Barrier
- Tree Protection Barrier (2nd Position)
- Supervised Excavation

Note: Trees 4-8, 12, 31-33, 69-79, 128-140, 143-146, 163, 210-212, 234 have been plotted using measurements onsite in conjunction with aerial imagery. Their locations were not recorded on the topographical survey of the site (drawing ref: T0944-Park Lane Charvil.dwg).

Note: The RPA footprint for Trees 1, 2, 31, 32, 210, 218, 221, 222, 236, 237 have been displaced to allow for the effect of the adopted highway and existing building foundations. The surface area of the RPA has not been reduced.

Default Barrier Specification, cited BS 5837:2012

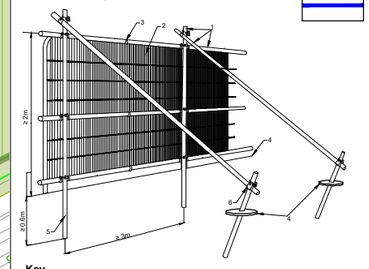

Key

1 Standard scaffold poles
2 Heavy gauge 2m tall galvanized tube and welded mesh infill panels
3 Panels secured to uprights and cross-members with wire ties
4 Ground level
5 Uprights driven into the ground until secure (minimum depth 0.6m)
6 Standard scaffold clamps

REV	DATE	NOTE	Drawn

REVISIONS

aspect arboriculture

TITLE

Park Lane, Charvil
Tree Protection Plan

CLIENT

Bellway

SCALE	DATE	DRAWN
1:1000 @ A3	DEC 2025	GW

DRAWING NUMBER	REVISION
12671 TPP 01 Rev B (3/3)	B

Based on: 5.2208.2000 rev I - Proposed Site Layout.dwg
RECORD P25-0896 SK100 P2 Drainage Strategy.dwg

APPENDIX B

WORKS AUDITING SCHEDULE (12671 WAS 01)

WORKS AUDITING SCHEDULE

Works Requiring Auditing	Tree No.	Date Undertaken	Date Reported to LPA
1. Pre-commencement meeting identifying tree removals, tree protection barrier locations and safeguarding measures, as specified within 12671_AMS.001 Rev B and illustrated on drawing no. 12671_TPP.01 Rev B Tree Protection Plan.	As drawn		
2: Inspection of tree protection barriers prior to commencement of development works by Project Arboriculturist.	As drawn		
4: Supervised Excavation	T222		
6: Inspection of installed tree protection barriers as specified within 12671_AMS.001 Rev B and illustrated on drawing no. 12671_TPP.01 Rev B Tree Protection Plan, on an appropriate basis.	As drawn		

APPENDIX C

TREE SURVEY SCHEDULE (12671 TS 01)

aspect arboriculture

BS 5837:2012 Tree Schedule: Park Lane, Charvil

12671 TS 01

aspect arboriculture

BS5837:2012 Tree Survey: Explanation of Survey Criteria

*Area around tree deemed to contain sufficient roots and rooting volume to maintain the tree's viability, and where the protection of roots and soil structure is a priority. *The RPA has been manipulated to allow for various site features, i.e. roads, structures or changes in levels. Please refer to the Tree Constraints Plan for these changes.*

e.g.: young, semi-mature, early-mature, mature, notable, veteran or ancient.

Sequential reference number cited on all aspect drawing.

Height and Crown spread measured to the nearest half meter; # denotes where this is estimated.

Category prefix A-C denotes arboricultural quality, decreasing from A (high) to C (low); Subcategories 1, 2 and 3 highlight associated arboricultural (1), landscape (2) and ecological (3) qualities.

Category U trees are those in such a condition that they cannot be realistically retained as living trees in the current context for the long term.

Tree Number	Common Species Name	Trunk Diameter (mm)	Height (m)	Crown Spread (m)					Crown Clearance (m)	Life Stage	Physiological Condition	Structural Condition	Comments	BS5837 Category	RPA Radius (m)
				N	E	S	W	radial							

Measured to the nearest 10mm; # denotes estimated diameter where access is not possible.

e.g.: above-average, average, below average or dead

General observations, i.e. defects, preliminary management recommendation, presence of pests/disease, perceived significance.

Height of first significant branch and/or canopy

e.g.: good, indifferent, poor, or hazardous

Colour band key:

Category A
Category B
Category C
Category U

The following survey should not be interpreted as a report on tree health and safety. Aspect's opinion of tree condition and structural potential is valid for a limited period of 12 months from the date of inspection. Validity is assumed in the absence of inclement weather and no change to the trees existing setting. Veteran or ancient trees defined as per the NPPF definition.

Tree Number	Common Species Name	Trunk Diameter (mm)	Height (m)	Crown Spread (m) N	E	S	W	Radial	First Significant Branch (m)	Crown Clearance (m)	Life Stage	Physiological Condition	Structural Condition	Comments	BS5837 Category	RPA Radius (m)
1	English Oak	1210	23	10 #	9.5	11	9.25		4	5	Mature	Average	Indifferent	Dominant component, on northern boundary Barbed wire fused into stem at c. 1m Minor bacterial bleeding on stem western aspect at c. 1.5m Above average epicormic growth on stem and lower scaffold limbs Previous lower limb removals to crown lift High collective value	A12	14.4
2	English Oak	1190	25	12.5 #	12.5	13.25	11.5		2	4.5	Mature	Average	Indifferent	Dominant component, on northern boundary Barbed wire fused into stem at c. 1m Previous lower limb removals to crown lift Large tear wound at c. 10.5m, on eastern aspect Signs of past management from previous reduction works on southern aspect High collective value	A12	14.4
3	English Oak	530 oi 460 oi # 350 oi	12	6.5 #	5.5	7	6.5		1	3	Early Mature	Average	Poor	Barbed wire fused into stem at c. 0.5m Multi stemmed from c. 1m, tight unions Stems fused to c. 2m, and continue to cross and rub to c. 3m Above average epicormic growth Low arboricultural quality	C12	9.3
4	Hawthorn	3 * 100 #	6					4	0.5	0.5	Semi Mature	Average	Indifferent	Stem inaccessible due to dense bramble Radial crown measurement due to restricted access Unremarkable example of species	C12	2.1
5	Hawthorn	3 * 60 #	4					2.5	0.5	0.5	Semi Mature	Average	Indifferent	Stem inaccessible due to dense bramble Radial crown measurement due to restricted access Unremarkable example of species	C2	1.2
6	Snow Gum	120 #	6	0.5 #	2 #	6.5	1.5 #		0.5	0.5	Semi Mature	Below Average	Poor	Inaccessible, offsite within adjacent third-party land, unable to thoroughly inspect Stem with heavy lean to south overhanging site Low arboricultural quality	C2	1.5
7	Blackthorn	100 #	5.5					3 #	1	1	Semi Mature	Average	Indifferent	Stem inaccessible due to dense bramble Radial crown measurement due to restricted access Unremarkable example of species	C2	1.2
8	Lawson Cypress	180 #	12					3	0.5	0.5	Semi Mature	Average	Indifferent	Inaccessible, offsite within adjacent third-party land, unable to thoroughly inspect Radial crown measurement due to restricted access Unremarkable example of species	C12	2.1
9	Hawthorn	11 * 70 #	5					4	0.5	0.5	Semi Mature	Below Average	Poor	Stem inaccessible due to dense bramble Multi stemmed from ground level, tight unions Readily replaceable at current size, low arboricultural value	C2	2.7

Tree Number	Common Species Name	Trunk Diameter (mm)	Height (m)	Crown Spread (m) N	E	S	W	Radial	First Significant Branch (m)	Crown Clearance (m)	Life Stage	Physiological Condition	Structural Condition	Comments	BS5837 Category	RPA Radius (m)
10	Sycamore	140 oi #	6.5					3	0.5	0.5	Semi Mature	Average	Poor	Clad and obscured by Ivy, unable to thoroughly inspect Inaccessible, offsite within adjacent third-party land Radial crown measurement due to restricted access Unremarkable example of species	C2	1.8
11	Hawthorn	5 * 110 oi #	5.5					3	0.5	0.5	Semi Mature	Average	Indifferent	Clad and obscured by Ivy, unable to thoroughly inspect Inaccessible, offsite within adjacent third-party land Radial crown measurement due to restricted access Unremarkable example of species	C2	3
12	Field Maple	200	5.5	0.5	2.25	4.75	6		1	1	Semi Mature	Average	Poor	Stem leans to south west Readily replaceable at current size, low arboricultural value	C2	2.4
13	English Oak	390	10	3	5.5	6.5	4.25		0.5	1.5	Early Mature	Average	Indifferent	Mutually suppressed and cohesive with companion shelter Individually of low significance, conferred moderate value as component of wider collective	B2	4.8
14	English Oak	210	8	4.75	4.25	1.75	1.75		1.5	2.5	Semi Mature	Average	Indifferent	Mutually suppressed and cohesive with companion shelter Individually of low significance, conferred moderate value as component of wider collective	B2	2.4
15	English Oak	300 240	11	2	2.5	4.75	2.75		1	1	Semi Mature	Average	Indifferent	Twin stemmed from ground level, union sound Mutually suppressed and cohesive with companion shelter Individually of low significance, conferred moderate value as component of wider collective	B2	4.5
16	English Oak	2 * 240	11	7	3.75	1.75	2.75		1.5	2	Semi Mature	Average	Poor	Twin stemmed from ground level, stems included and fused to c. 0.5m Mutually suppressed and cohesive with companion shelter Readily replaceable at current size, low arboricultural value	C2	4.2
17	English Oak	260	10.5	1.5	2.75	5.5	4		1	1.5	Semi Mature	Average	Indifferent	Mutually suppressed and cohesive with companion shelter Individually of low significance, conferred moderate value as component of wider collective	B2	3
18	English Oak	120 300	12.5	3	2.75	5.5	4		3.5	2	Semi Mature	Average	Indifferent	Mutually suppressed and cohesive with companion shelter Individually of low significance, conferred moderate value as component of wider collective	B2	3.9
19	English Oak	170	9.5	4.75	2.75	1.25	1		1	2	Semi Mature	Average	Indifferent	Mutually suppressed and cohesive with companion shelter Readily replaceable at current size, low arboricultural value	C2	2.1
20	English Oak	230	10	5.75	2.75	1.75	3		2	2	Semi Mature	Average	Indifferent	Mutually suppressed and cohesive with companion shelter Individually of low significance, conferred moderate value as component of wider collective	B2	2.7

Tree Number	Common Species Name	Trunk Diameter (mm)	Height (m)	Crown Spread (m) N	E	S	W	Radial	First Significant Branch (m)	Crown Clearance (m)	Life Stage	Physiological Condition	Structural Condition	Comments	BS5837 Category	RPA Radius (m)
21	English Oak	230	11.5	4	2.75	1.75	2.75		5	2	Semi Mature	Average	Indifferent	Mutually suppressed and cohesive with companion shelter Individually of low significance, conferred moderate value as component of wider collective	B2	2.7
22	English Oak	150 340	12	2.25	3	4.75	3.75		1	1	Semi Mature	Average	Indifferent	Mutually suppressed and cohesive with companion shelter Small sub dominant stem to south from c. 0.5m, with tight union Individually of low significance, conferred moderate value as component of wider collective	B2	4.5
23	English Oak	160	8.5	1	3	4.25	1		1	1.5	Semi Mature	Average	Indifferent	Mutually suppressed and cohesive with companion shelter Readily replaceable at current size, low arboricultural value	C2	1.8
24	English Oak	260	10.5	1	2.5	5.5	2.5		1	1	Semi Mature	Average	Indifferent	Mutually suppressed and cohesive with companion shelter Individually of low significance, conferred moderate value as component of wider collective	B2	3
25	English Oak	230	7.5	1.5	1.5	4.5	4.5		1	1	Semi Mature	Average	Indifferent	Mutually suppressed and cohesive with companion shelter Heavily suppressed by dominant companion shelter, limited future potential	C2	2.7
26	English Oak	250	11.5	3	3.75	4.25	3.75		1	2	Semi Mature	Average	Indifferent	Mutually suppressed and cohesive with companion shelter Individually of low significance, conferred moderate value as component of wider collective	B2	3
27	English Oak	270	12	3.75	2.5	4	5.75		2	1.52	Semi Mature	Average	Indifferent	Mutually suppressed and cohesive with companion shelter Individually of low significance, conferred moderate value as component of wider collective	B2	3.3
28	English Oak	270 260	12	4.75	5.75	5	5		1	1.5	Semi Mature	Average	Indifferent	Mutually suppressed and cohesive with companion shelter Twin stemmed from c. 0.5m, union sound Individually of low significance, conferred moderate value as component of wider collective	B2	4.5
29	English Oak	310	12.5	6	3.75	6	4.25		2	3	Semi Mature	Average	Indifferent	Mutually suppressed and cohesive with companion shelter Individually of low significance, conferred moderate value as component of wider collective	B2	3.6
30	English Oak	260	12	1	4.75	5.5	3		1	2	Semi Mature	Average	Indifferent	Mutually suppressed and cohesive with companion shelter Stem with minor lean south Individually of low significance, conferred moderate value as component of wider collective	B2	3

Tree Number	Common Species Name	Trunk Diameter (mm)	Height (m)	Crown Spread (m) N	E	S	W	Radial	First Significant Branch (m)	Crown Clearance (m)	Life Stage	Physiological Condition	Structural Condition	Comments	BS5837 Category	RPA Radius (m)
31	English Oak	1500 #	17	8 #	8	9.25	7		3.5	2.5	Veteran	Below Average	Poor	Inaccessible, offsite within adjacent third-party land, unable to thoroughly inspect Above average epicormic growth on stem and lower scaffold limbs Reactive burr growth on stem from ground level to c. 5.5m Woodpecker holes throughout Previous lower limb removals to crown lift *Fistulina hepatica* at c. 4m on southern aspect Large cavity with column of active decay on main stem at c. 6.25m Several lower scaffold limbs with large longitudinal wounding, decay present Minor internal deadwood Veteran status due to large size for species and primary features including hollowing of stem and decay fungi High arboricultural value	A123	**VTB 22.5**
32	English Oak	740 #	16					6.5	7.5	2	Mature	Average	Poor	Inaccessible, offsite within neighbouring residential land, unable to thoroughly inspect Suppressed west by dominant T33 Signs of past management from previous reduction works Moderate collective value	B2	9
33	Norway Maple 'Crimson King'	480 #	14					6.5 #	3.1	4.1	Early Mature	Average	Indifferent	Inaccessible, offsite within adjacent third-party land, unable to thoroughly inspect Surveyed from distance Radial crown measurement due to restricted access Structure appears typical for species within current context Moderate example of species	B12	5.7
34	Ash	210	10.5	4.5	4	4.75	4 #		1.5	2	Semi Mature	Average	Indifferent	Unremarkable example of species	C2	2.4
35	Field Maple	150	8	2	2.5	2	1.5		1	2	Semi Mature	Below Average	Indifferent	Larger component of G5 Mutually suppressed and cohesive with companion shelter Unremarkable example of species	C2	1.8
36	English Oak	150	9	1	1.5	2	1.75		4	2	Semi Mature	Below Average	Indifferent	Larger component of G5 Mutually suppressed and cohesive with companion shelter Unremarkable example of species	C2	1.8
37	English Oak	100 160	11	2	2.75	2.75	2		5.5	5	Semi Mature	Average	Indifferent	Larger component of G5 Mutually suppressed and cohesive with companion shelter Unremarkable example of species	C2	2.4
38	Hazel	3 * 170 2 * 220	9.5	5	4.75	5.25	6		0.5	0.5	Early Mature	Average	Indifferent	Larger component of G5 Mutually suppressed and cohesive with companion shelter Multi stemmed from ground level Unremarkable example of species	C12	5.1

Tree Number	Common Species Name	Trunk Diameter (mm)	Height (m)	Crown Spread (m) N	E	S	W	Radial	First Significant Branch (m)	Crown Clearance (m)	Life Stage	Physiological Condition	Structural Condition	Comments	BS5837 Category	RPA Radius (m)
39	English Oak	230	9.5	3	3	3	3.5		5	5	Semi Mature	Average	Indifferent	Larger component of G5 Mutually suppressed and cohesive with companion shelter Individually of low significance, conferred moderate value as component of wider collective	B2	2.7
40	English Oak	230	10	3.75	4	4	3		3	4	Semi Mature	Average	Indifferent	Larger component of G5 Mutually suppressed and cohesive with companion shelter Individually of low significance, conferred moderate value as component of wider collective	B2	2.7
41	English Oak	260	11	3.25	3.75	1.75	3.5		4	3.5	Semi Mature	Average	Indifferent	Larger component of G5 Mutually suppressed and cohesive with companion shelter Individually of low significance, conferred moderate value as component of wider collective	B2	3
42	English Oak	260	11	2	5.25	3.25	3.5		1.5	2	Semi Mature	Average	Indifferent	Larger component of G5 Mutually suppressed and cohesive with companion shelter Individually of low significance, conferred moderate value as component of wider collective	B2	3
43	English Oak	210	11.5	3	4.25	1.75	1.25		4	3.5	Semi Mature	Average	Indifferent	Larger component of G5 Mutually suppressed and cohesive with companion shelter Individually of low significance, conferred moderate value as component of wider collective	B2	2.4
44	English Oak	210	12	2.5	2.5	2	1.5		4	3	Semi Mature	Average	Indifferent	Larger component of G5 Mutually suppressed and cohesive with companion shelter Individually of low significance, conferred moderate value as component of wider collective	B2	2.4
45	English Oak	250	11.5	4.25	2.5	3.75	4		2	1.5	Semi Mature	Average	Indifferent	Larger component of G5 Mutually suppressed and cohesive with companion shelter Individually of low significance, conferred moderate value as component of wider collective	B2	3
46	Turkey Oak	260	10	3.5	6	5.5	1.5		1	2	Semi Mature	Average	Indifferent	Larger component of G5 Mutually suppressed and cohesive with companion shelter Individually of low significance, conferred moderate value as component of wider collective	B2	3
47	Turkey Oak	270	13.5	2.5	3	3.5	2.5		2	2	Semi Mature	Average	Indifferent	Larger component of G5 Mutually suppressed and cohesive with companion shelter Individually of low significance, conferred moderate value as component of wider collective	B2	3.3

Tree Number	Common Species Name	Trunk Diameter (mm)	Height (m)	Crown Spread (m) N	E	S	W	Radial	First Significant Branch (m)	Crown Clearance (m)	Life Stage	Physiological Condition	Structural Condition	Comments	BS5837 Category	RPA Radius (m)
48	English Oak	250	12	2.75	2.75	3.25	4		5	4.5	Semi Mature	Average	Indifferent	Larger component of G5 Mutually suppressed and cohesive with companion shelter Individually of low significance, conferred moderate value as component of wider collective	B2	3
49	English Oak	200	11.5	3	4	1.75	3.75		3	3	Semi Mature	Average	Indifferent	Larger component of G5 Mutually suppressed and cohesive with companion shelter Individually of low significance, conferred moderate value as component of wider collective	B2	2.4
50	English Oak	230 250	12.5	3	4	3.25	3.5		4	4	Semi Mature	Average	Indifferent	Larger component of G5 Mutually suppressed and cohesive with companion shelter Twin stemmed from ground level, union sound Individually of low significance, conferred moderate value as component of wider collective	B2	4.2
51	English Oak	340	12.5	5	7	4	3		0.5	2	Semi Mature	Average	Indifferent	Larger component of G5 Mutually suppressed and cohesive with companion shelter Individually of low significance, conferred moderate value as component of wider collective	B2	4.2
52	Hawthorn	140	7	3.5	4.75	2.75	0.5		0.5	0.5	Semi Mature	Average	Indifferent	Readily replaceable at current size, low arboricultural value	C2	1.8
53	English Oak	180	10.5	2.25	3.5	2.25	1.5		1	1	Semi Mature	Average	Indifferent	Larger component of G5 Mutually suppressed and cohesive with companion shelter Individually of low significance, conferred moderate value as component of wider collective	B2	2.1
54	English Oak	250	11.5	3.25	3	4	3.5		2	1.5	Semi Mature	Average	Indifferent	Larger component of G5 Mutually suppressed and cohesive with companion shelter Individually of low significance, conferred moderate value as component of wider collective	B2	3
55	Turkey Oak	300	10.5	4	6	4.5	3		0.5	2	Semi Mature	Average	Indifferent	Larger component of G5 Mutually suppressed and cohesive with companion shelter Individually of low significance, conferred moderate value as component of wider collective	B2	3.6
56	English Oak	350	13	4	3.75	5.5	5		1	2	Early Mature	Average	Indifferent	Larger component of G5 Mutually suppressed and cohesive with companion shelter Individually of low significance, conferred moderate value as component of wider collective	B2	4.2
57	English Oak	280	10.5	3.25	5	4	4.25		1	1	Semi Mature	Average	Indifferent	Larger component of G5 Mutually suppressed and cohesive with companion shelter Individually of low significance, conferred moderate value as component of wider collective	B2	3.3

Tree Number	Common Species Name	Trunk Diameter (mm)	Height (m)	Crown Spread (m) N	E	S	W	Radial	First Significant Branch (m)	Crown Clearance (m)	Life Stage	Physiological Condition	Structural Condition	Comments	BS5837 Category	RPA Radius (m)
58	English Oak	240	10.5	4.75	3	5.25	5		1.5	1	Semi Mature	Average	Indifferent	Larger component of G5 Mutually suppressed and cohesive with companion shelter Individually of low significance, conferred moderate value as component of wider collective	B2	3
59	English Oak	200	11	2	3	2.5	1.5		3	2.5	Semi Mature	Average	Indifferent	Larger component of G5 Mutually suppressed and cohesive with companion shelter Individually of low significance, conferred moderate value as component of wider collective	B2	2.4
60	English Oak	260	12	2.25	4.75	4	3.5		3.5	4	Semi Mature	Average	Indifferent	Larger component of G5 Mutually suppressed and cohesive with companion shelter Individually of low significance, conferred moderate value as component of wider collective	B2	3
61	English Oak	230	11.5	2.75	2	3	4.75		2	2.5	Semi Mature	Average	Indifferent	Larger component of G5 Mutually suppressed and cohesive with companion shelter Individually of low significance, conferred moderate value as component of wider collective	B2	2.7
62	English Oak	220	10	2.25	4.75	3	0.5		1	1	Semi Mature	Below Average	Poor	Previously fallen east into adjacent small Oak Readily replaceable at current size, low arboricultural value	C2	2.7
63	English Oak	280	13	3.5	4.5	4	4		2	2.5	Semi Mature	Average	Indifferent	Larger component of G5 Mutually suppressed and cohesive with companion shelter Individually of low significance, conferred moderate value as component of wider collective	B2	3.3
64	English Oak	220	10.5	2	3	4	2.5		4	2	Semi Mature	Average	Indifferent	Larger component of G5 Mutually suppressed and cohesive with companion shelter Individually of low significance, conferred moderate value as component of wider collective	B2	2.7
65	English Oak	230	11	3.5	2.75	4	2		3	3	Semi Mature	Average	Indifferent	Larger component of G5 Mutually suppressed and cohesive with companion shelter Individually of low significance, conferred moderate value as component of wider collective	B2	2.7
66	English Oak	330	11	3.5	6.5	5	4.5		1	2	Semi Mature	Average	Indifferent	Larger component of G5 Mutually suppressed and cohesive with companion shelter Individually of low significance, conferred moderate value as component of wider collective	B2	3.9
67	English Oak	200 oi	8	2.5	3.75	2.74	2		1.5	2	Semi Mature	Average	Indifferent	Clad and obscured by Ivy, unable to thoroughly inspect Readily replaceable at current size, low arboricultural value	C2	2.4

Tree Number	Common Species Name	Trunk Diameter (mm)	Height (m)	Crown Spread (m) N	E	S	W	Radial	First Significant Branch (m)	Crown Clearance (m)	Life Stage	Physiological Condition	Structural Condition	Comments	BS5837 Category	RPA Radius (m)
68	English Oak	250	8	4.75	4.5	3.5	4		1	1	Semi Mature	Average	Indifferent	Larger component of G5 Mutually suppressed and cohesive with companion shelter Individually of low significance, conferred moderate value as component of wider collective	B2	3
69	English Oak	1000 #	16	3.5 #	7	8.5 #	10 #		2.5	1.1	Mature	Average	Indifferent	Inaccessible, offsite within adjacent third-party land, unable to thoroughly inspect Clad and obscured by Ivy Mutually suppressed and cohesive with companion shelter Dominant eastern edge component of G4 Structure appears typical for species within current context High collective value	A2	12
70	English Oak	750 #	19	8 #	7.75	4.5 #	10 #		4	4.5	Mature	Average	Indifferent	Inaccessible, offsite within adjacent third-party land, unable to thoroughly inspect Mutually suppressed and cohesive with companion shelter Dominant eastern edge component of G4 Structure appears typical for species within current context High collective value	A2	9
71	Ash	450 oi # 400 330 430	16	6.5 #	9	8.5 #	9.5 #		6	5	Early Mature	Average	Poor	Dominant eastern edge component of G4 Inaccessible, offsite within adjacent third-party land, unable to thoroughly inspect Mutually suppressed and cohesive with companion shelter Multi stemmed from ground level, with decaying cavities at base Moderate collective value	B2	9.6
72	Ash	550 # 430 oi # 110 # 360 #	18	12 #	10	8.5 #	10 #		1.5	1	Early Mature	Average	Poor	Dominant eastern edge component of G4 Inaccessible, offsite within adjacent third-party land, unable to thoroughly inspect Mutually suppressed and cohesive with companion shelter Multi stemmed from ground level, with decaying cavities at base Moderate collective value	B2	9.6
73	Ash	570 # 580 #	22	4 #	9	10 #	8.5 #		8.5	6.5	Early Mature	Below Average	Poor	Inaccessible, offsite within adjacent third-party land, unable to thoroughly inspect Dominant eastern edge component of G4 Multi stemmed from ground level, with decaying cavities Northern stem with longitudinal wound exposing heartwood on eastern aspect from c.3m to c. 5.5m Several *Inonotus hispidus* brackets on wound Mutually suppressed and cohesive with companion shelter Moderate collective value	B2	9.9
74	English Oak	740 #	22	4 #	10	4 #	9 #		4.5	6	Mature	Average	Indifferent	Inaccessible, offsite within adjacent third-party land, unable to thoroughly inspect Mutually suppressed and cohesive with companion shelter Dominant eastern edge component of G4 Structure appears typical for species within current context High collective value	A2	9

Tree Number	Common Species Name	Trunk Diameter (mm)	Height (m)	Crown Spread (m) N	E	S	W	Radial	First Significant Branch (m)	Crown Clearance (m)	Life Stage	Physiological Condition	Structural Condition	Comments	BS5837 Category	RPA Radius (m)
75	English Oak	810 #	22	6.5 #	8.5	5.5 #	9.5 #		8.5	6	Mature	Average	Indifferent	Inaccessible, offsite within adjacent third-party land, unable to thoroughly inspect Mutually suppressed and cohesive with companion shelter Dominant eastern edge component of G4 Structure appears typical for species within current context High collective value	A2	9.6
76	English Oak	650 oi 650 # 620	25	7.75	16	10 #	11 #		5	6	Early Mature	Average	Indifferent	Inaccessible, offsite within adjacent third-party land, unable to thoroughly inspect Mutually suppressed and cohesive with companion shelter Dominant eastern edge component of G4 Multi stemmed from ground level Minor cavities between buttress flares High collective value	A12	13.2
77	English Oak	950 oi	25	10 #	9.75	6	10 #		4	6.5	Mature	Average	Indifferent	Inaccessible, offsite within adjacent third-party land, unable to thoroughly inspect Clad and obscured by Ivy Mutually suppressed and cohesive with companion shelter Dominant eastern edge component of G4 Structure appears typical for species within current context High collective value	A12	11.4
78	English Oak	870 #	21	7 #	7.5 #	8 #	7.5 #		6	7.1	Mature	Average	Indifferent	Inaccessible, offsite within adjacent third-party land, unable to thoroughly inspect Surveyed from distance Mutually suppressed and cohesive with companion shelter Dominant eastern edge component of G4 Structure appears typical for species within current context High collective value	A2	10.5
79	Ash	540 580 #	23	7 #	7 #	6.5 #	5.5 #		6.1	6.1	Early Mature	Below Average	Poor	Several cavities and pockets of decay within bole Previous third stem failed at c. 1m to southern aspect with large decaying wound Unlikely to offer a long-term future contribution	C2	9.6
80	Goat Willow	2 * 130 2 * 100 2 * 150	9	3.25	4.5	4.5	3.5		0.5	0.5	Semi Mature	Average	Poor	Multi stemmed from ground level, tight unions Unremarkable example of species	C2	3.6
81	Silver Birch	220	12	3.25	4.25	3	3		2	1.5	Semi Mature	Average	Indifferent	Unremarkable example of species	C12	2.7
82	English Oak	210	6.5	3.5	3.5	3.5	4		1.5	1	Semi Mature	Average	Indifferent	Unremarkable example of species	C12	2.4
83	English Oak	170	7.5	4	4	2	2		1.5	2	Semi Mature	Below Average	Poor	Mutually suppressed and cohesive with companion shelter Wounding to all aspects of base Readily replaceable at current size, low arboricultural value	C2	2.1

Tree Number	Common Species Name	Trunk Diameter (mm)	Height (m)	Crown Spread (m) N	E	S	W	Radial	First Significant Branch (m)	Crown Clearance (m)	Life Stage	Physiological Condition	Structural Condition	Comments	BS5837 Category	RPA Radius (m)
84	English Oak	160	7	3.5	2	1.75	2.75		2	2	Semi Mature	Average	Indifferent	Unremarkable example of species	C12	1.8
85	English Oak	150	7	1.75	2	1.5	1		2.5	2.5	Semi Mature	Below Average	Poor	Wounding to all aspects of base Readily replaceable at current size, low arboricultural value	C2	1.8
86	English Oak	120	7	2.5	1.75	1.5	2.5		3	3	Semi Mature	Average	Indifferent	Unremarkable example of species	C12	1.5
87	English Oak	150	7	2	2	3	2		2.5	3	Semi Mature	Average	Indifferent	Unremarkable example of species	C12	1.8
88	English Oak	140 190	7	4.25	5.25	3	2.5		1	1	Semi Mature	Average	Indifferent	Unremarkable example of species	C12	2.7
89	English Oak	200	7	3.75	4.5	2.25	2.5		2	2	Semi Mature	Average	Indifferent	Unremarkable example of species	C12	2.4
90	Aspen	350	23					4	7	6.5	Early Mature	Average	Indifferent	Larger component of G7 Mutually suppressed and cohesive with companion shelter Individually of low significance, conferred moderate value as component of wider collective	B2	4.2
91	Aspen	280	23					3.5	6	6	Semi Mature	Average	Indifferent	Larger component of G7 Mutually suppressed and cohesive with companion shelter Individually of low significance, conferred moderate value as component of wider collective	B2	3.3
92	Aspen	260	23					2	6	6	Semi Mature	Average	Indifferent	Larger component of G7 Mutually suppressed and cohesive with companion shelter Individually of low significance, conferred moderate value as component of wider collective	B2	3
93	Aspen	300 oi	23					3	6	6	Semi Mature	Average	Indifferent	Larger component of G7 Mutually suppressed and cohesive with companion shelter Individually of low significance, conferred moderate value as component of wider collective	B2	3.6
94	Aspen	220	23					2	6	6	Semi Mature	Average	Indifferent	Larger component of G7 Mutually suppressed and cohesive with companion shelter Individually of low significance, conferred moderate value as component of wider collective	B2	2.7
95	Aspen	300	23					3	6	6	Semi Mature	Average	Indifferent	Larger component of G7 Mutually suppressed and cohesive with companion shelter Individually of low significance, conferred moderate value as component of wider collective	B2	3.6

Tree Number	Common Species Name	Trunk Diameter (mm)	Height (m)	Crown Spread (m) N	E	S	W	Radial	First Significant Branch (m)	Crown Clearance (m)	Life Stage	Physiological Condition	Structural Condition	Comments	BS5837 Category	RPA Radius (m)
96	Aspen	250	23					2.5	6	6	Semi Mature	Average	Indifferent	Larger component of G7 Mutually suppressed and cohesive with companion shelter Individually of low significance, conferred moderate value as component of wider collective	B2	3
97	Aspen	270 oi	23					2.5	6	6	Semi Mature	Average	Indifferent	Larger component of G7 Mutually suppressed and cohesive with companion shelter Individually of low significance, conferred moderate value as component of wider collective	B2	3.3
98	Aspen	260 oi	23					2.5	6	6	Semi Mature	Average	Indifferent	Larger component of G7 Mutually suppressed and cohesive with companion shelter Individually of low significance, conferred moderate value as component of wider collective	B2	3
99	Aspen	250	23					3	6	6	Semi Mature	Average	Indifferent	Larger component of G7 Mutually suppressed and cohesive with companion shelter Individually of low significance, conferred moderate value as component of wider collective	B2	3
100	Aspen	220	23					3	6	6	Semi Mature	Average	Indifferent	Larger component of G7 Mutually suppressed and cohesive with companion shelter Individually of low significance, conferred moderate value as component of wider collective	B2	2.7
101	Aspen	260	23					2.5	6	6	Semi Mature	Average	Indifferent	Larger component of G7 Mutually suppressed and cohesive with companion shelter Individually of low significance, conferred moderate value as component of wider collective	B2	3
102	Aspen	200	23					2.5	6	6	Semi Mature	Average	Indifferent	Larger component of G7 Mutually suppressed and cohesive with companion shelter Individually of low significance, conferred moderate value as component of wider collective	B2	2.4
103	Aspen	260	23					3	6	6	Semi Mature	Average	Indifferent	Larger component of G7 Mutually suppressed and cohesive with companion shelter Individually of low significance, conferred moderate value as component of wider collective	B2	3
104	Aspen	260	23					2	6	6	Semi Mature	Average	Indifferent	Larger component of G7 Mutually suppressed and cohesive with companion shelter Individually of low significance, conferred moderate value as component of wider collective	B2	3

Tree Number	Common Species Name	Trunk Diameter (mm)	Height (m)	Crown Spread (m) N	E	S	W	Radial	First Significant Branch (m)	Crown Clearance (m)	Life Stage	Physiological Condition	Structural Condition	Comments	BS5837 Category	RPA Radius (m)
105	Aspen	210	23					2	6	6	Semi Mature	Average	Indifferent	Larger component of G7 Mutually suppressed and cohesive with companion shelter Individually of low significance, conferred moderate value as component of wider collective	B2	2.4
106	Aspen	270	23					3	6	6	Semi Mature	Average	Indifferent	Larger component of G7 Mutually suppressed and cohesive with companion shelter Individually of low significance, conferred moderate value as component of wider collective	B2	3.3
107	Aspen	260	23					3	6	6	Semi Mature	Average	Indifferent	Larger component of G7 Mutually suppressed and cohesive with companion shelter Individually of low significance, conferred moderate value as component of wider collective	B2	3
108	Aspen	210	23					2.5	6	6	Semi Mature	Average	Indifferent	Larger component of G7 Mutually suppressed and cohesive with companion shelter Individually of low significance, conferred moderate value as component of wider collective	B2	2.4
109	Aspen	270	23					4	6	6	Semi Mature	Average	Indifferent	Larger component of G7 Mutually suppressed and cohesive with companion shelter Individually of low significance, conferred moderate value as component of wider collective	B2	3.3
110	Aspen	190	23					2.5	6	6	Semi Mature	Average	Indifferent	Larger component of G7 Mutually suppressed and cohesive with companion shelter Individually of low significance, conferred moderate value as component of wider collective	B2	2.4
111	Aspen	240	23					3	6	6	Semi Mature	Average	Indifferent	Larger component of G7 Mutually suppressed and cohesive with companion shelter Individually of low significance, conferred moderate value as component of wider collective	B2	3
112	Aspen	310	23					4.5	6	6	Semi Mature	Average	Indifferent	Larger component of G7 Mutually suppressed and cohesive with companion shelter Individually of low significance, conferred moderate value as component of wider collective	B2	3.6
113	Aspen	180	23	7	3	3	3		6	6	Semi Mature	Average	Indifferent	Larger component of G7 Mutually suppressed and cohesive with companion shelter Individually of low significance, conferred moderate value as component of wider collective	B2	2.1

Tree Number	Common Species Name	Trunk Diameter (mm)	Height (m)	Crown Spread (m) N	E	S	W	Radial	First Significant Branch (m)	Crown Clearance (m)	Life Stage	Physiological Condition	Structural Condition	Comments	BS5837 Category	RPA Radius (m)
114	Aspen	220	23	5.5	3	3	3		6	6	Semi Mature	Average	Indifferent	Larger component of G7 Mutually suppressed and cohesive with companion shelter Individually of low significance, conferred moderate value as component of wider collective	B2	2.7
115	Aspen	230	23	5.75	3	3	3		6	6	Semi Mature	Average	Indifferent	Larger component of G7 Mutually suppressed and cohesive with companion shelter Individually of low significance, conferred moderate value as component of wider collective	B2	2.7
116	Aspen	270	23					3	6	6	Semi Mature	Average	Indifferent	Larger component of G7 Mutually suppressed and cohesive with companion shelter Individually of low significance, conferred moderate value as component of wider collective	B2	3.3
117	Aspen	230	23					3	6	6	Semi Mature	Average	Indifferent	Larger component of G7 Mutually suppressed and cohesive with companion shelter Individually of low significance, conferred moderate value as component of wider collective	B2	2.7
118	Aspen	210 oi	23					2	6	6	Semi Mature	Average	Indifferent	Larger component of G7 Mutually suppressed and cohesive with companion shelter Individually of low significance, conferred moderate value as component of wider collective	B2	2.4
119	Aspen	210	23					2	6	6	Semi Mature	Average	Indifferent	Larger component of G7 Mutually suppressed and cohesive with companion shelter Individually of low significance, conferred moderate value as component of wider collective	B2	2.4
120	Aspen	210	23					3.5	6	6	Semi Mature	Average	Indifferent	Larger component of G7 Mutually suppressed and cohesive with companion shelter Individually of low significance, conferred moderate value as component of wider collective	B2	2.4
121	Aspen	130	7					1.5	4	4	Semi Mature	Average	Poor	Longitudinal wound exposing heartwood Unlikely to offer a long-term future contribution	C2	1.5
122	Aspen	150	7					1.5	4	4	Semi Mature	Average	Indifferent	Unremarkable example of species	C2	1.8
123	Aspen	170	7					1.5	4	4	Semi Mature	Average	Indifferent	Unremarkable example of species	C2	2.1
124	English Oak	180	6	4.25	3.5	2.25	3.5		2	2	Semi Mature	Average	Indifferent	Unremarkable example of species	C12	2.1
125	English Oak	170	7.5	4	3.25	3	3.5		2	2	Semi Mature	Average	Indifferent	Unremarkable example of species	C12	2.1

Tree Number	Common Species Name	Trunk Diameter (mm)	Height (m)	Crown Spread (m) N	E	S	W	Radial	First Significant Branch (m)	Crown Clearance (m)	Life Stage	Physiological Condition	Structural Condition	Comments	BS5837 Category	RPA Radius (m)
126	Ash	250	11	5	2.5	2.75	4.5		2	4	Semi Mature	Average	Poor	Wound on southern aspect of stem Unlikely to offer a long-term future contribution	C2	3
127	Ash	210	9	3	3	2.25	2.5		2	4	Semi Mature	Average	Poor	Wound on southern aspect of stem Unlikely to offer a long-term future contribution	C2	2.4
128	English Oak	440	9	8.5	6	0.5	9 #		3	5.5	Early Mature	Average	Indifferent	Inaccessible, offsite within adjacent third-party land, unable to thoroughly inspect Mutually suppressed and cohesive with companion shelter Dominant eastern edge component of G4 Heavily suppressed by dominant companion shelter, limited future potential Moderate collective value	B2	5.4
129	English Oak	680	18	7.5 #	9.5	7.5 #	7 #		3	5	Early Mature	Average	Indifferent	Clad and obscured by Ivy, unable to thoroughly inspect Inaccessible, offsite within adjacent third-party land Structure appears typical for species within current context Dominant eastern edge component of G4 Moderate example of species	B12	8.1
130	English Oak	650 # 180 oi # 720 oi #	24	7.5	8	4.5 #	10 #		8	8.5	Early Mature	Average	Indifferent	Inaccessible, offsite within adjacent third-party land, unable to thoroughly inspect Clad and obscured by Ivy Dominant eastern edge component of G4 Mutually suppressed and cohesive with companion shelter Small dead standing stem from c. 0.5m on northern aspect Minor wounding to lower stem Structure appears typical for species within current context High collective value	A2	11.7
131	English Oak	360 #	15	4	9.5	3	0.5		6	6.5	Early Mature	Average	Poor	Inaccessible, offsite within adjacent third-party land, unable to thoroughly inspect Heavily suppressed by dominant companion shelter, limited future potential	C12	4.2
132	English Oak	550 # 670 #	24	6	11.25	7.75	12 #		8	8.5	Early Mature	Average	Indifferent	Inaccessible, offsite within adjacent third-party land, unable to thoroughly inspect Mutually suppressed and cohesive with companion shelter Dominant eastern edge component of G4 Twin stemmed from ground level, union sound Structure appears typical for species within current context High collective value	A2	10.5
133	Grey Poplar	950	28	11.5	7	3.75	8		9	8	Mature	Average	Indifferent	Principle woodland edge component On northern boundary of W1 Structure appears typical for species within current context High collective value	A2	11.4

Tree Number	Common Species Name	Trunk Diameter (mm)	Height (m)	Crown Spread (m) N	E	S	W	Radial	First Significant Branch (m)	Crown Clearance (m)	Life Stage	Physiological Condition	Structural Condition	Comments	BS5837 Category	RPA Radius (m)
134	Ash	500 360 3 * 140 430	23	11.5	7.75	8.75	4.75		4.5	7	Early Mature	Below Average	Poor	Dominant woodland edge component On northern boundary of W1 Clad and obscured by Ivy, unable to thoroughly inspect Multi stemmed from ground level Several cavities and pockets of decay within bole Low arboricultural quality	C12	8.4
135	Grey Poplar	930	28	11	11	12.25	8.25		10	8	Mature	Average	Indifferent	Principle woodland edge component On northern boundary of W1 Structure appears typical for species within current context High collective value	A2	11.1
136	Grey Poplar	570	24	11	10	8.5	9.5		11	7	Early Mature	Average	Poor	Dominant woodland edge component On northern boundary of W1 Clad and obscured by Ivy, unable to thoroughly inspect Stem bifurcates at c. 4.5m, union appears tight Moderate collective value	B2	6.9
137	English Oak	520	19	9.25	9.25	10.5	5		2	1.5	Early Mature	Average	Indifferent	Dominant woodland edge component Structure appears typical for species within current context Mutually suppressed and cohesive with companion shelter Moderate collective value	B12	6.3
138	English Oak	440	16.5	8	5.25	4.25	6		5.5	3	Early Mature	Average	Indifferent	Dominant woodland edge component Mutually suppressed and cohesive with companion shelter Crown biased north Moderate collective value	B2	5.4
139	Ash	940	19	7.5	4.5	3	7.25		1	3.5	Mature	Below Average	Poor	Dominant woodland edge component Large branch failure tear wound on northern aspect at c. 2m *Daldinia concentrica* throughout crown Previous branch failure wound on western aspect of stem at c. 4.25m, with active decay Large previous limb failure tear wound at c.7.5m on eastern aspect, with active decay Fallen *Inonotus hispidus* bracket at base Woodpecker holes throughout Entering a state of terminal decline, reduced future potential	C12	11.4
140	English Oak	1020	14	7	7.5	4.75	7		3.5	3	Mature	Below Average	Poor	Longitudinal wound exposing heartwood from ground level to c. 4.5m, on south eastern aspect of stem *Laetiporus sulphureous* on wound at c. 2m Wound on southern aspect of stem at c. 3.5m Large previous tear wound exposing heartwood, on north western aspect of stem from c. 2.5-5m Multiple small branch failure wounds throughout crown Dieback to upper crown Entering a state of terminal decline, reduced future potential	C12	12.3

Tree Number	Common Species Name	Trunk Diameter (mm)	Height (m)	Crown Spread (m) N	E	S	W	Radial	First Significant Branch (m)	Crown Clearance (m)	Life Stage	Physiological Condition	Structural Condition	Comments	BS5837 Category	RPA Radius (m)
141	English Oak	200	7.5	4	2.5	2.25	3		1	1	Semi Mature	Average	Indifferent	Mutually suppressed and cohesive with companion shelter Unremarkable example of species	C2	2.4
142	English Oak	160	7.5	3.5	3	3.5	1.5		1	1	Semi Mature	Average	Indifferent	Mutually suppressed and cohesive with companion shelter Unremarkable example of species	C2	1.8
143	Crack Willow	890	7.5	8.75	8.75	5	5.75		0	2.5	Mature	Below Average	Hazardous	Extensive hollowing throughout main stem with signs of active decay Multiple previous limb failures, partially attached at c. 6m Hornet nest within hollow stem Hazardous structural condition, unsuitable for retention	U	N/A
144	Ash	590	22	9.25	7.75	6	6		4.5	3.5	Early Mature	Average	Poor	Dominant woodland edge component Sub dominant stem from c. 3.25m, tight union, rubbing on main stem at c. 6m Moderate collective value	B2	7.2
145	Ash	490	16	3.5	12.75	7	0		1	3	Early Mature	Average	Poor	Dominant woodland edge component Stem with heavy lean to the eastern aspect Unlikely to offer a long-term future contribution	C12	6
146	Alder	570 oi	16	3.75	5.5	6.5	3		7.5	7	Early Mature	Average	Indifferent	Clad and obscured by Ivy, unable to thoroughly inspect Dominant woodland edge component Mutually suppressed and cohesive with companion shelter Moderate collective value	B2	6.9
147	Alder	220	14.5	3	2.75	2.5	2.75		5	3	Semi Mature	Average	Indifferent	Edge component of G9 Mutually suppressed and cohesive with companion shelter Unremarkable example of species	C12	2.7
148	Alder	80 170	14	2	1.75	1.75	2.25		10	10	Semi Mature	Average	Indifferent	Edge component of G9 Mutually suppressed and cohesive with companion shelter Unremarkable example of species	C12	2.4
149	Alder	130 2 * 150	14	3	2.75	4	4		2.5	3	Semi Mature	Average	Indifferent	Edge component of G9 Mutually suppressed and cohesive with companion shelter Multi stemmed from ground level Unremarkable example of species	C12	3
150	Alder	2 * 60 160	13	3	1.75	1	2.75		7	7.5	Semi Mature	Average	Indifferent	Edge component of G9 Mutually suppressed and cohesive with companion shelter Multi stemmed from ground level Unremarkable example of species	C12	2.1
151	Hawthorn	180 #	7.5	3.5	3	2	3.5		0.5	0.5	Semi Mature	Average	Indifferent	Edge component of G9 Mutually suppressed and cohesive with companion shelter Unremarkable example of species	C12	2.1

Tree Number	Common Species Name	Trunk Diameter (mm)	Height (m)	Crown Spread (m) N	E	S	W	Radial	First Significant Branch (m)	Crown Clearance (m)	Life Stage	Physiological Condition	Structural Condition	Comments	BS5837 Category	RPA Radius (m)
152	Beech	160	8.5	3.25	2.25	2.5	3		0.5	0.5	Semi Mature	Average	Indifferent	Edge component of G9 Mutually suppressed and cohesive with companion shelter Unremarkable example of species	C12	1.8
153	Goat Willow	320	9.5	5	1.75	2.75	5.5		1	1	Semi Mature	Average	Indifferent	Edge component of G9 Mutually suppressed and cohesive with companion shelter Unremarkable example of species	C2	3.9
154	Goat Willow	190 130	6	7	3	0	3.5		0	1	Semi Mature	Average	Poor	Previously fallen north Unremarkable example of species	C2	2.7
155	Goat Willow	400 230 190 160 150 320	9.5	7.5	4.5	5	6		0.5	0.5	Early Mature	Average	Poor	Edge component of G9 Mutually suppressed and cohesive with companion shelter Multi stemmed from c. 0.5m, tight unions Low arboricultural quality	C12	7.2
156	Alder	160	10	4	1.25	1.25	3		2	4	Semi Mature	Average	Indifferent	Edge component of G9 Mutually suppressed and cohesive with companion shelter Unremarkable example of species	C2	1.8
157	Alder	160 190	8.5	3.5	2	1.75	2		7	7	Semi Mature	Average	Indifferent	Edge component of G9 Mutually suppressed and cohesive with companion shelter Unremarkable example of species	C2	3
158	Alder	210 140	9.5	5.25	1	1.5	2.5		2	2	Semi Mature	Average	Indifferent	Edge component of G9 Mutually suppressed and cohesive with companion shelter Unremarkable example of species	C12	3
159	Goat Willow	210 200 190 180 180 180 170 150 130 90 290	11.5	7	5.5	2.5	6.75		0.5	0.5	Semi Mature	Average	Poor	Edge component of G9 Mutually suppressed and cohesive with companion shelter Multi stemmed from ground level, tight included unions Unremarkable example of species	C2	7.2
160	Goat Willow	240 240 200 190 130 260	12	3.75	7.5	6	5.75		4	0.5	Semi Mature	Average	Poor	Edge component of G9 Mutually suppressed and cohesive with companion shelter Multi stemmed from ground level, tight included unions Unremarkable example of species	C12	6.3

Tree Number	Common Species Name	Trunk Diameter (mm)	Height (m)	Crown Spread (m) N	E	S	W	Radial	First Significant Branch (m)	Crown Clearance (m)	Life Stage	Physiological Condition	Structural Condition	Comments	BS5837 Category	RPA Radius (m)
161	Alder	180	8.5					1	1	1	Semi Mature	Dead	Poor	Standing deadwood Unsuitable for retention	U	N/A
162	Alder	210	11	4	3.75	1.75	2		1	1	Semi Mature	Average	Indifferent	Edge component of G9 Mutually suppressed and cohesive with companion shelter Unremarkable example of species	C12	2.4
163	English Oak	320	9.5	5.5	4.25	2	5.5		1	1	Semi Mature	Average	Indifferent	Larger component of G9 Individually of low significance, conferred moderate value as component of wider collective	B2	3.9
164	English Oak	290	10	4.75	3.5	4 #	3 #		3	2	Semi Mature	Average	Indifferent	Larger component of G13 Mutually suppressed and cohesive with companion shelter Individually of low significance, conferred moderate value as component of wider collective	B2	3.6
165	English Oak	310	10	5	3.5	5	3.5		1	1	Semi Mature	Average	Indifferent	Larger component of G13 Mutually suppressed and cohesive with companion shelter Individually of low significance, conferred moderate value as component of wider collective	B2	3.6
166	English Oak	390	10	5.75	4.5	5	4.5		1	1	Early Mature	Average	Indifferent	Larger component of G13 Mutually suppressed and cohesive with companion shelter Individually of low significance, conferred moderate value as component of wider collective	B2	4.8
167	English Oak	240	10	3	3	4 #	3.5 #		3	2	Semi Mature	Average	Indifferent	Larger component of G13 Mutually suppressed and cohesive with companion shelter Individually of low significance, conferred moderate value as component of wider collective	B2	3
168	English Oak	320	10	3.5	3	4	2.75		2	2	Semi Mature	Average	Indifferent	Larger component of G13 Mutually suppressed and cohesive with companion shelter Individually of low significance, conferred moderate value as component of wider collective	B2	3.9
169	English Oak	180	10	5	2	1	2.75		2	2	Semi Mature	Average	Indifferent	Larger component of G13 Mutually suppressed and cohesive with companion shelter Individually of low significance, conferred moderate value as component of wider collective	B2	2.1
170	English Oak	170 2 * 310	10	5	6	2.5	4.5		1	2	Semi Mature	Average	Poor	Larger component of G13 Mutually suppressed and cohesive with companion shelter Individually of low significance, conferred moderate value as component of wider collective	B2	5.7

Tree Number	Common Species Name	Trunk Diameter (mm)	Height (m)	Crown Spread (m) N	E	S	W	Radial	First Significant Branch (m)	Crown Clearance (m)	Life Stage	Physiological Condition	Structural Condition	Comments	BS5837 Category	RPA Radius (m)
171	English Oak	210	10	3.25	2	2	2.75		5	2	Semi Mature	Average	Indifferent	Larger component of G13 Mutually suppressed and cohesive with companion shelter Individually of low significance, conferred moderate value as component of wider collective	B2	2.4
172	Goat Willow	250 190	6	5	7	2	2.75		0	0.5	Semi Mature	Below Average	Poor	Mutually suppressed and cohesive with companion shelter Previously failed limb with active decay In a state of terminal decline, unlikely to offer a long-term future contribution	U	N/A
173	English Oak	2 * 180	10	3.75	3.75	1.75	1.5		5	2	Semi Mature	Average	Poor	Mutually suppressed and cohesive with companion shelter Stem bifurcates at c. 0.5m, included union Low arboricultural quality	C2	3
174	English Oak	180	10	1.5	5.5	2	0.5		1	1	Semi Mature	Average	Poor	Mutually suppressed and cohesive with companion shelter Heavily suppressed by dominant companion shelter, limited future potential	C2	2.1
175	English Oak	240	10	4.75	5.75	4	2.5		1	2	Semi Mature	Average	Indifferent	Larger component of G13 Mutually suppressed and cohesive with companion shelter Individually of low significance, conferred moderate value as component of wider collective	B2	3
176	English Oak	270	10	2	6.75	3.25	2.75		4	3	Semi Mature	Average	Indifferent	Larger component of G13 Mutually suppressed and cohesive with companion shelter Individually of low significance, conferred moderate value as component of wider collective	B2	3.3
177	English Oak	340	12	5	3.5	5.25	4.75 #		2	3	Semi Mature	Average	Indifferent	Larger component of G13 Mutually suppressed and cohesive with companion shelter Individually of low significance, conferred moderate value as component of wider collective	B2	4.2
178	English Oak	270	12	3.75	5	3.5	3.25		2	1	Semi Mature	Average	Indifferent	Larger component of G13 Mutually suppressed and cohesive with companion shelter Individually of low significance, conferred moderate value as component of wider collective	B2	3.3
179	English Oak	280 160	12	4.75	2.75	3.25	4.5		1	1	Semi Mature	Average	Indifferent	Larger component of G13 Mutually suppressed and cohesive with companion shelter Individually of low significance, conferred moderate value as component of wider collective	B2	3.9
180	English Oak	250	12	5.5	5	5	2.5		1	2	Semi Mature	Average	Indifferent	Larger component of G13 Mutually suppressed and cohesive with companion shelter Individually of low significance, conferred moderate value as component of wider collective	B2	3

Tree Number	Common Species Name	Trunk Diameter (mm)	Height (m)	Crown Spread (m) N	E	S	W	Radial	First Significant Branch (m)	Crown Clearance (m)	Life Stage	Physiological Condition	Structural Condition	Comments	BS5837 Category	RPA Radius (m)
181	English Oak	270	12	4	2.75	4.5 #	3.75 #		3	3	Semi Mature	Average	Indifferent	Larger component of G13 Mutually suppressed and cohesive with companion shelter Individually of low significance, conferred moderate value as component of wider collective	B2	3.3
182	English Oak	390	12	6	5	5 #	5.5		2	1	Early Mature	Average	Indifferent	Larger component of G13 Mutually suppressed and cohesive with companion shelter Individually of low significance, conferred moderate value as component of wider collective	B2	4.8
183	English Oak	280	12	4.25	6.5	3.5 #	2.5 #		1	2	Semi Mature	Average	Indifferent	Larger component of G13 Mutually suppressed and cohesive with companion shelter Individually of low significance, conferred moderate value as component of wider collective	B2	3.3
184	English Oak	270	12	3.75	2.5	3.75	6.75		1	2	Semi Mature	Average	Indifferent	Larger component of G13 Mutually suppressed and cohesive with companion shelter Individually of low significance, conferred moderate value as component of wider collective	B2	3.3
185	Ash	290	12	5.5	4.75	3	4		2	2	Semi Mature	Below Average	Poor	Large wound on stem from ground level to c. 1.5m Unlikely to offer a long-term future contribution	C2	3.6
186	Silver Birch	320	14	4	3	3	3		3	3.5	Semi Mature	Average	Indifferent	Larger component of G11 Mutually suppressed and cohesive with companion shelter Individually of low significance, conferred moderate value as component of wider collective	B2	3.9
187	English Oak	290	12	4.75	3.75	1.5	5.5		1	2.5	Semi Mature	Average	Indifferent	Larger component of G11 Mutually suppressed and cohesive with companion shelter Individually of low significance, conferred moderate value as component of wider collective	B2	3.6
188	English Oak	280	13	6	2	2.5	4.75		1	2.5	Semi Mature	Average	Indifferent	Larger component of G11 Mutually suppressed and cohesive with companion shelter Individually of low significance, conferred moderate value as component of wider collective	B2	3.3
189	English Oak	270	13	5.5	5.75	5.75	2.5		5	4	Semi Mature	Average	Indifferent	Larger component of G11 Mutually suppressed and cohesive with companion shelter Individually of low significance, conferred moderate value as component of wider collective	B2	3.3
190	English Oak	330	13	6	6.25	4.75	2.5		3	2.5	Semi Mature	Average	Indifferent	Larger component of G11 Mutually suppressed and cohesive with companion shelter Individually of low significance, conferred moderate value as component of wider collective	B2	3.9

Tree Number	Common Species Name	Trunk Diameter (mm)	Height (m)	Crown Spread (m) N	E	S	W	Radial	First Significant Branch (m)	Crown Clearance (m)	Life Stage	Physiological Condition	Structural Condition	Comments	BS5837 Category	RPA Radius (m)
191	English Oak	270 230	13	3.5	5.75	5.5	2		1	1	Semi Mature	Average	Indifferent	Larger component of G11 Mutually suppressed and cohesive with companion shelter Bifurcates from ground level Individually of low significance, conferred moderate value as component of wider collective	B2	4.2
192	English Oak	340	14	5	3	4.5	5.5		5	4	Semi Mature	Average	Indifferent	Larger component of G11 Mutually suppressed and cohesive with companion shelter Individually of low significance, conferred moderate value as component of wider collective	B2	4.2
193	English Oak	320	13	6.5	2	6	7.5		1	3	Semi Mature	Average	Indifferent	Larger component of G11 Mutually suppressed and cohesive with companion shelter Individually of low significance, conferred moderate value as component of wider collective	B2	3.9
194	English Oak	270 250	13	5.5	5.5	5.25	2.75		1	1	Semi Mature	Average	Poor	Bifurcates from ground level, stems fused to c. 1m Unlikely to offer a long-term future contribution	C2	4.5
195	English Oak	300	13	6.75	3	3	3		1	2	Semi Mature	Average	Indifferent	Larger component of G11 Mutually suppressed and cohesive with companion shelter Individually of low significance, conferred moderate value as component of wider collective	B2	3.6
196	English Oak	330	13	5.75	2	2.5	6.75		1	2	Semi Mature	Average	Indifferent	Larger component of G11 Mutually suppressed and cohesive with companion shelter Individually of low significance, conferred moderate value as component of wider collective	B2	3.9
197	English Oak	350	13	5.5	2.75	2.75	5		1	1	Early Mature	Average	Indifferent	Larger component of G11 Mutually suppressed and cohesive with companion shelter Individually of low significance, conferred moderate value as component of wider collective	B2	4.2
198	English Oak	260	14	3.5	3.5	4 #	4 #		4	4	Semi Mature	Average	Indifferent	Larger component of G13 Mutually suppressed and cohesive with companion shelter Individually of low significance, conferred moderate value as component of wider collective	B2	3
199	English Oak	260	13	5	4	4.5 #	3.5 #		2	3	Semi Mature	Average	Indifferent	Larger component of G13 Mutually suppressed and cohesive with companion shelter Individually of low significance, conferred moderate value as component of wider collective	B2	3
200	Ash	270	12.5	4.5	3.5 #	4 #	3 #		5	3	Semi Mature	Average	Indifferent	Larger component of G13 Mutually suppressed and cohesive with companion shelter Individually of low significance, conferred moderate value as component of wider collective	B2	3.3

Tree Number	Common Species Name	Trunk Diameter (mm)	Height (m)	Crown Spread (m) N	E	S	W	Radial	First Significant Branch (m)	Crown Clearance (m)	Life Stage	Physiological Condition	Structural Condition	Comments	BS5837 Category	RPA Radius (m)
201	English Oak	290	14	3	4.5 #	5.75 #	3.5 #		3	2	Semi Mature	Average	Indifferent	Larger component of G13 Mutually suppressed and cohesive with companion shelter Individually of low significance, conferred moderate value as component of wider collective	B2	3.6
202	English Oak	350	14.5	6	3	4.25 #	4 #		1	1	Early Mature	Average	Indifferent	Larger component of G13 Mutually suppressed and cohesive with companion shelter Individually of low significance, conferred moderate value as component of wider collective	B2	4.2
203	English Oak	290 #	13	6	5 #	3.5 #	3 #		1.5	1	Semi Mature	Average	Indifferent	Larger component of G13 Mutually suppressed and cohesive with companion shelter Individually of low significance, conferred moderate value as component of wider collective	B2	3.6
204	English Oak	190 #	13	3.75	4 #	4 #	3 #		5	5	Semi Mature	Average	Indifferent	Larger component of G13 Mutually suppressed and cohesive with companion shelter Stem inaccessible due to dense understorey Individually of low significance, conferred moderate value as component of wider collective	B2	2.4
205	Turkey Oak	170 2 * 140 260	13	4	3.5 #	3 #	4.5 #		2.5	1	Semi Mature	Average	Indifferent	Larger component of G13 Mutually suppressed and cohesive with companion shelter Multi stemmed from ground level Individually of low significance, conferred moderate value as component of wider collective	B2	4.5
206	English Oak	410	14.5	5.75	6.5	7	4.75		1	1.5	Early Mature	Average	Indifferent	Larger component of G13 Mutually suppressed and cohesive with companion shelter Individually of low significance, conferred moderate value as component of wider collective	B2	4.8
207	Ash	300	12	3.75	4 #	4 #	4.5 #		1	2	Semi Mature	Average	Indifferent	Larger component of G13 Mutually suppressed and cohesive with companion shelter Individually of low significance, conferred moderate value as component of wider collective	B2	3.6
208	English Oak	310	13	4.5	4.5	4.75 #	4		1	1.5	Semi Mature	Average	Indifferent	Larger component of G13 Mutually suppressed and cohesive with companion shelter Individually of low significance, conferred moderate value as component of wider collective	B2	3.6
209	English Oak	360	13.5	7	4.5	5 #	4.25		1	1	Early Mature	Average	Indifferent	Larger component of G13 Mutually suppressed and cohesive with companion shelter Individually of low significance, conferred moderate value as component of wider collective	B2	4.2

Tree Number	Common Species Name	Trunk Diameter (mm)	Height (m)	Crown Spread (m) N	E	S	W	Radial	First Significant Branch (m)	Crown Clearance (m)	Life Stage	Physiological Condition	Structural Condition	Comments	BS5837 Category	RPA Radius (m)
210	English Oak	780 oi #	10.5	5.75	5.5 #	5 #	6 #		2.5	3	Mature	Below Average	Poor	Clad and obscured by Ivy, unable to thoroughly inspect Inaccessible, offsite within adjacent third-party land Dieback to upper crown Average internal deadwood with large diameter in lower crown Low arboricultural quality	C12	9.3
211	Ash	300 oi #	10					3.5	1	1	Semi Mature	Below Average	Poor	Stem inaccessible due to dense bramble Entering a state of terminal decline, reduced future potential	U	N/A
212	Ash	300 oi #	10					3.5	1	1	Semi Mature	Below Average	Poor	Stem inaccessible due to dense bramble Entering a state of terminal decline, reduced future potential	U	N/A
213	English Oak	280 #	12	4.5	3.5 #	4 #	4.5 #		3	2.5	Semi Mature	Average	Indifferent	Larger component of G13 Stem inaccessible due to dense bramble Mutually suppressed and cohesive with companion shelter Individually of low significance, conferred moderate value as component of wider collective	B2	3.3
214	English Oak	280 #	12	4.5	4.5 #	4 #	3 #		3	2.5	Semi Mature	Average	Indifferent	Larger component of G13 Stem inaccessible due to dense bramble Mutually suppressed and cohesive with companion shelter Individually of low significance, conferred moderate value as component of wider collective	B2	3.3
215	English Oak	280	9.5	4.75	3.5	3.5	5.25		1	2	Semi Mature	Average	Indifferent	Larger component of G13 Mutually suppressed and cohesive with companion shelter Individually of low significance, conferred moderate value as component of wider collective	B2	3.3
216	English Oak	270	8.5	4	2.75	2.5	3.25		1.5	1	Semi Mature	Average	Indifferent	Larger component of G13 Mutually suppressed and cohesive with companion shelter Individually of low significance, conferred moderate value as component of wider collective	B2	3.3
217	English Oak	300	9.5	4.5	5.25	4	4		1	1	Semi Mature	Average	Indifferent	Larger component of G13 Mutually suppressed and cohesive with companion shelter Individually of low significance, conferred moderate value as component of wider collective	B2	3.6
218	Alder	2 * 200 # 2 * 320 #	12	4.5	2.5 #	5.5 #	7 #		3	2	d	Average	Indifferent	Inaccessible, offsite within adjacent third-party land, unable to thoroughly inspect Multi stemmed from ground level Suppressed by dominant T219 Crown biased south west Individually of low significance, conferred moderate value as component of wider collective	B2	6.3

Tree Number	Common Species Name	Trunk Diameter (mm)	Height (m)	Crown Spread (m) N	E	S	W	Radial	First Significant Branch (m)	Crown Clearance (m)	Life Stage	Physiological Condition	Structural Condition	Comments	BS5837 Category	RPA Radius (m)
219	Ash	760 #	16	8.75	8.5 #	8 #	9.5 #		1.5	2	Mature	Average	Indifferent	Inaccessible, offsite within adjacent third-party land, unable to thoroughly inspect Structure appears typical for species within current context Moderate example of species	B12	9
220	English Oak	850 oi #	15	5	4.5 #	5 #	4.5 #		5	5.1	Mature	Dead	Hazardous	Clad and obscured by Ivy, unable to thoroughly inspect Standing deadwood Hazardous structural condition, unsuitable for retention	U	N/A
221	Field Maple	320 oi # 140 oi # 100 oi # 280 oi #	10	5	4.25	5.75 #	5.75		1	1	Early Mature	Average	Indifferent	Partially obscured by bramble, unable to thoroughly inspect Established screen to road Stem inaccessible due to dense understorey Individually of low significance, conferred moderate value as component of wider collective	B2	5.4
222	Field Maple	270 oi 260 oi # 220 oi 280 oi	10	2.5	3.5	4.75	3		2.5	2	Early Mature	Average	Poor	Clad and obscured by Ivy, unable to thoroughly inspect Multi stemmed from ground level, with decay in unions Readily replaceable at current size, low arboricultural value	C12	6.3
223	English Oak	330	10.5	6	5.5	5.75	5		1	2	Semi Mature	Average	Indifferent	Mutually suppressed and cohesive with companion shelter Individually of low significance, conferred moderate value as component of wider collective	B2	3.9
224	English Oak	270	8.5	5.25	4	1.75	3.25		2	2.5	Semi Mature	Below Average	Poor	Dieback to upper crown Low arboricultural quality	C2	3.3
225	Goat Willow	330 320 310 260 180 340	10	6	4.75	7	6.5		2	1	Early Mature	Below Average	Poor	Multi stemmed from ground level, with tight included unions Low arboricultural quality	C12	8.4
226	Goat Willow	3 * 140	5					3	1	1	Semi Mature	Dead	Poor	Standing deadwood Unsuitable for retention	U	N/A
227	Goat Willow	290 100 130	5	1	2.5	5	3.75		0.5	1	Semi Mature	Below Average	Poor	Heavily suppressed by dominant companion shelter, limited future potential	C2	3.9
228	English Oak	250	9.5	2.75	3.5	5.25	1.25		1	1.5	Semi Mature	Average	Indifferent	Larger component of G15 Mutually suppressed and cohesive with companion shelter Individually of low significance, conferred moderate value as component of wider collective	B2	3

Tree Number	Common Species Name	Trunk Diameter (mm)	Height (m)	Crown Spread (m) N	E	S	W	Radial	First Significant Branch (m)	Crown Clearance (m)	Life Stage	Physiological Condition	Structural Condition	Comments	BS5837 Category	RPA Radius (m)
229	English Oak	490	12	5.75	4.25	6.5	5.75		1	1	Early Mature	Average	Indifferent	Larger component of G15 Mutually suppressed and cohesive with companion shelter Individually of low significance, conferred moderate value as component of wider collective	B2	6
230	English Oak	260	12	2.75	4	5.5	1.5		1	2.5	Semi Mature	Average	Indifferent	Larger component of G15 Mutually suppressed and cohesive with companion shelter Individually of low significance, conferred moderate value as component of wider collective	B2	3
231	English Oak	390	13.5	4	3.25	5.5	4		1	2.5	Early Mature	Average	Indifferent	Larger component of G15 Mutually suppressed and cohesive with companion shelter Individually of low significance, conferred moderate value as component of wider collective	B12	4.8
232	English Oak	350	10.5	3.5	2.5	6.5	6.75		1	1	Early Mature	Average	Indifferent	Larger component of G15 Mutually suppressed and cohesive with companion shelter Individually of low significance, conferred moderate value as component of wider collective	B12	4.2
233	English Oak	190	9	1.75	3.75	5	2		3	3	Semi Mature	Below Average	Poor	Heavily suppressed by dominant companion shelter, limited future potential Readily replaceable at current size, low arboricultural value	C12	2.4
234	English Oak	250 #	12					4.5	3.5	3	Semi Mature	Average	Indifferent	Larger component of G15 Stem inaccessible due to dense understorey Mutually suppressed and cohesive with companion shelter Individually of low significance, conferred moderate value as component of wider collective	B2	3
235	English Oak	420	12	5.75	5.5	5	5.5		1	2.5	Early Mature	Average	Indifferent	Larger component of G15 Mutually suppressed and cohesive with companion shelter Individually of low significance, conferred moderate value as component of wider collective	B12	5.1
236	English Oak	620 oi 500 oi	15	7 #	7.25	6.5	7.5		1	2	Early Mature	Average	Poor	Prominent boundary feature Clad and obscured by Ivy, unable to thoroughly inspect Stem leans north from ground level Twin stemmed from c. 1.5m, union obscured Structure appears typical for species within current context High collective value	A2	9.6
237	English Oak	1100 oi #	14	8.5 #	8.75 #	8	9.5 #		1	2	Mature	Average	Indifferent	Prominent boundary feature Clad and obscured by Ivy, unable to thoroughly inspect Stem inaccessible due to dense understorey Structure appears typical for species within current context High collective value	A2	13.2

Tree Number	Common Species Name	Trunk Diameter (mm)	Height (m)	Crown Spread (m) N	E	S	W	Radial	First Significant Branch (m)	Crown Clearance (m)	Life Stage	Physiological Condition	Structural Condition	Comments	BS5837 Category	RPA Radius (m)
G1	Hawthorn Elder Blackthorn	70 av	5 av					2.5 av	0.5 av	0.5 av	Young to Semi Mature	Below Average	Poor	Intermittent parcel of self-set specimens and colonising scrub Readily replaceable at current size, low arboricultural value	C2	0.9
G2	Hawthorn English Oak Ash	180 av	8 av					2.5 av	1 av	1 av	Semi Mature	Average	Indifferent	Smaller self set trees providing understory for trees 13-30 Unremarkable collection	C12	2.1
G3	Apple Lawson Cypress	150 av #	7 av					3 av	0.5 av	0.5 av	Semi Mature	Average	Indifferent	Inaccessible, offsite within neighbouring residential land, unable to thoroughly inspect Unremarkable collection	C12	1.8
G4	English Oak Hawthorn Ash Blackthorn Holly Hazel Field Maple Elder	350 av # 600 max #	8 av 20 max					8 av	0.5 av	0.5 av	Semi Mature to Early Mature	Average	Poor	Inaccessible, offsite within adjacent third-party land, unable to thoroughly inspect Cohesive group of establishing buffer plantings Structures appear typical for species within current context High collective value	A2	4.2 av 7.2 max
G5	English Oak Ash Hawthorn Blackthorn Hazel Hawthorn Elder Field Maple	180 av	10 av					3.5 av	1.5 av	1 av	Semi Mature	Average	Indifferent	Cohesive group of establishing buffer plantings Provides understory for trees 34-67 Group mainly consists of self-set specimens and colonising scrub Readily replaceable at current size, low arboricultural value	C12	2.1
G6	English Oak Hawthorn Ash Blackthorn	90 av	5 av					2 av	0.5 av	0.5 av	Young to Semi Mature	Average	Indifferent	Intermittent parcel of self-set specimens and colonising scrub Readily replaceable at current size, low arboricultural value	C12	1.2
G7	Aspen English Oak	170 av	20 av					2 av	6 av	6 av	Young to Semi Mature	Average	Indifferent	Frontage group of W1 Readily replaceable at current size, low arboricultural value	C12	2.1
G8	Blackthorn	60 av #	4 av					2 av	0 av	0 av	Young to Semi Mature	Average	Indifferent	Unremarkable collection	C2	1.2
G9	English Oak Alder Goat Willow Beech	150 av	9.5 av					2 av	1 av	1 av	Young to Semi Mature	Average	Indifferent	Frontage cohesive collection of W1 Small group majoring on Alder Unremarkable collection	C2	1.8

Tree Number	Common Species Name	Trunk Diameter (mm)	Height (m)	Crown Spread (m) N	E	S	W	Radial	First Significant Branch (m)	Crown Clearance (m)	Life Stage	Physiological Condition	Structural Condition	Comments	BS5837 Category	RPA Radius (m)
G10	Goat Willow	6 * 220 av	12 av					6.5 av	1 av	1 av	Early Mature	Average	Poor	Linear collection of 8no. trees Canopies are mutually cohesive All components multi stemmed from ground level, with tight included unions Unremarkable collection	C12	2.7
G11	English Oak Hawthorn	180 av	10 av					2 av	1 av	1 av	Semi Mature	Average	Indifferent	Forms understory for trees 186-197 Unremarkable collection	C12	2.1
G12	Goat Willow	6 * 280 av	12 av					6.5 av	0.5 av	1 av	Semi Mature	Average	Poor	Canopies are mutually cohesive Multi stemmed from ground level, with tight included unions Unremarkable collection	C2	3.3
G13	English Oak Ash Alder Goat Willow Hawthorn Blackthorn	150 av	8 av					2.5 av	0.5 av	0.5 av	Young to Semi Mature	Average	Indifferent	Contributes to screen of adjacent buildings Unremarkable collection	C12	1.8
G14	English Oak Blackthorn Ash	80 av #	5.5 av					1.5 av	0.5 av	0.5 av	Young to Semi Mature	Average	Indifferent	Unremarkable collection	C12	0.9
G15	English Oak Blackthorn Ash Hazel Crack Willow Goat Willow Grey Poplar	90 av #	5.5 av					2 av	0.5 av	0.5 av	Young to Semi Mature	Average	Indifferent	Contributes to screen of adjacent buildings Unremarkable collection	C12	1.2
G16	Blackthorn Hawthorn	65 av #	4.5 av					1.5 av	0.5 av	0.5 av	Young to Semi Mature	Average	Indifferent	Intermittent parcel of self-set specimens and colonising scrub Readily replaceable at current size, low arboricultural value	C12	0.9
H1	Leyland Cypress Bay	90 av #	5 av					1.5 av	0.5 av	0.5 av	Young to Semi Mature	Average	Indifferent	Inaccessible, offsite within adjacent third-party land, unable to thoroughly inspect Intermittent maintained domestic hedge on boundary Unremarkable example of species	C2	1.2
H2	Yew	80 av #	2.5 av					1 av	0.5 av	0.5 av	Young to Semi Mature	Average	Indifferent	Maintained domestic hedgerow	C2	0.9

Tree Number	Common Species Name	Trunk Diameter (mm)	Height (m)	Crown Spread (m) N	E	S	W	Radial	First Significant Branch (m)	Crown Clearance (m)	Life Stage	Physiological Condition	Structural Condition	Comments	BS5837 Category	RPA Radius (m)
W1	English Oak Aspen Ash Hawthorn Blackthorn Field Maple Grey Poplar Hazel Sycamore Crack Willow Alder Silver Birch Holly	380 av 950 max #	19 av 26 max					7 av	1 av	0.5 av	Semi Mature to Mature	Below Average to Average	Poor to Indifferent	Structures typical for species within current context Typical etiolated form within woodland context Occasional standing dead within interior High collective value	A2	4.5 av 11.4 max

APPENDIX D

BARRIER SPECIFICATIONS

Recommended Tree Protection Fencing Specification for this Development

(Source: BS 5837: 2012)

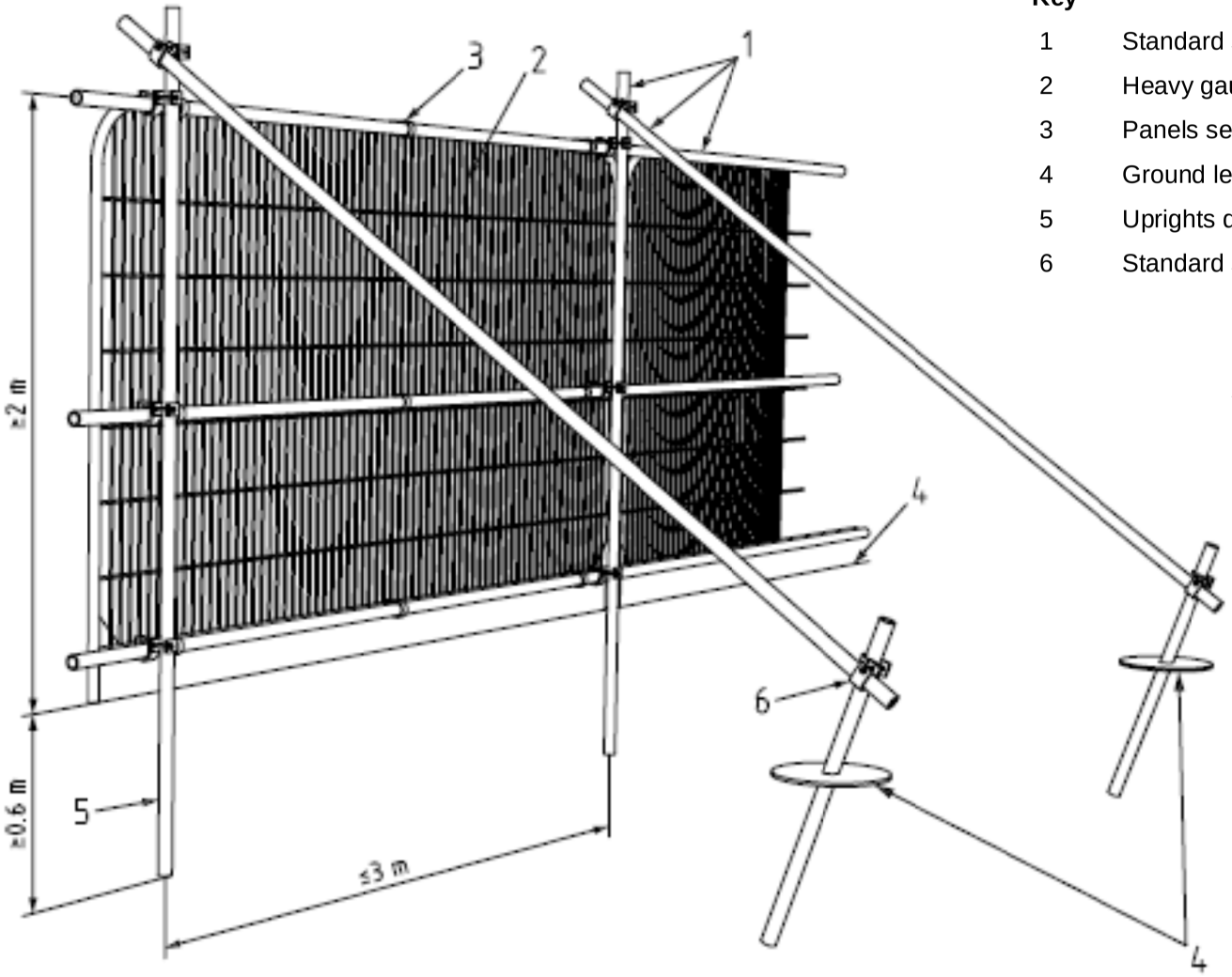

Key

1	Standard scaffold poles
2	Heavy gauge 2m tall galvanized tube and welded mesh infill panels
3	Panels secured to uprights and cross-members with wire ties
4	Ground level
5	Uprights driven into the ground until secure (minimum depth 0.6m)
6	Standard scaffold clamps

Notes:

- *Supports are to be sited tree side of the panel front face.*
- *All weather notices should be attached to every fourth panel highlighting the importance of the barrier in its correct position. An example is provided overleaf which may be duplicated for use on this development.*

aspect arboriculture

Tree Protection Barrier Specification

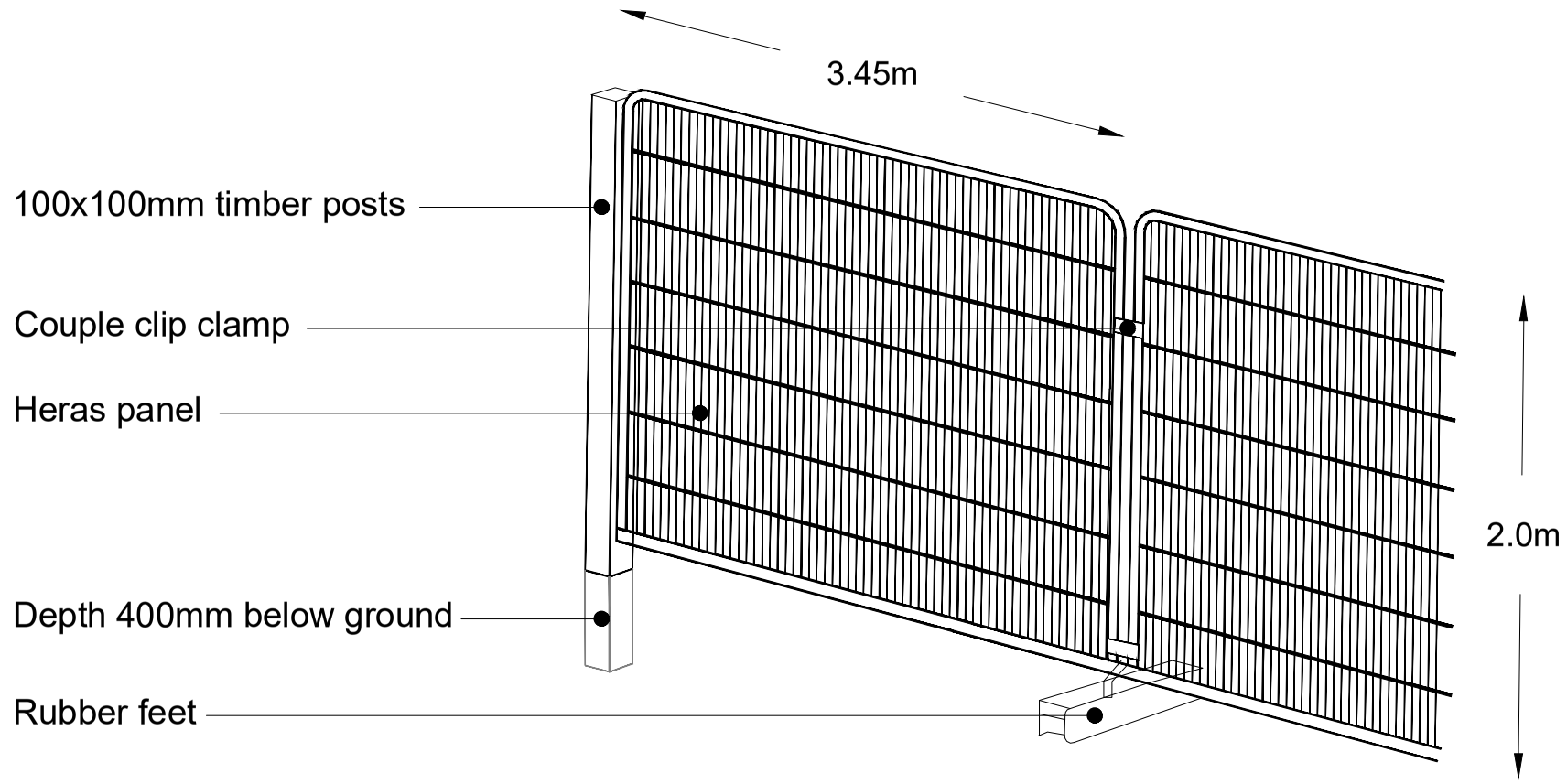

Heras panels supported with pinned rubber feet and driven 100x100mm timber posts on every second panel.

aspect arboriculture

TREE PROTECTION BARRIER

- **DO NOT MOVE THIS FENCE**
- **NO SITE ACTIVITY TREE SIDE OF FENCE**
- **NO STORAGE TREE SIDE OF FENCE**

- **For assistance call Aspect Arboriculture: 01295 276066**

aspect arboriculture

landscape planning • ecology • arboriculture

aspect

Aspect Arboriculture
West Court
Hardwick Business Park
Noral Way
Banbury
Oxfordshire OX16 2AF

T: 01295 276066
F: 01295 265072
E: info@aspect-arbor.com
W: www.aspect-arbor.com