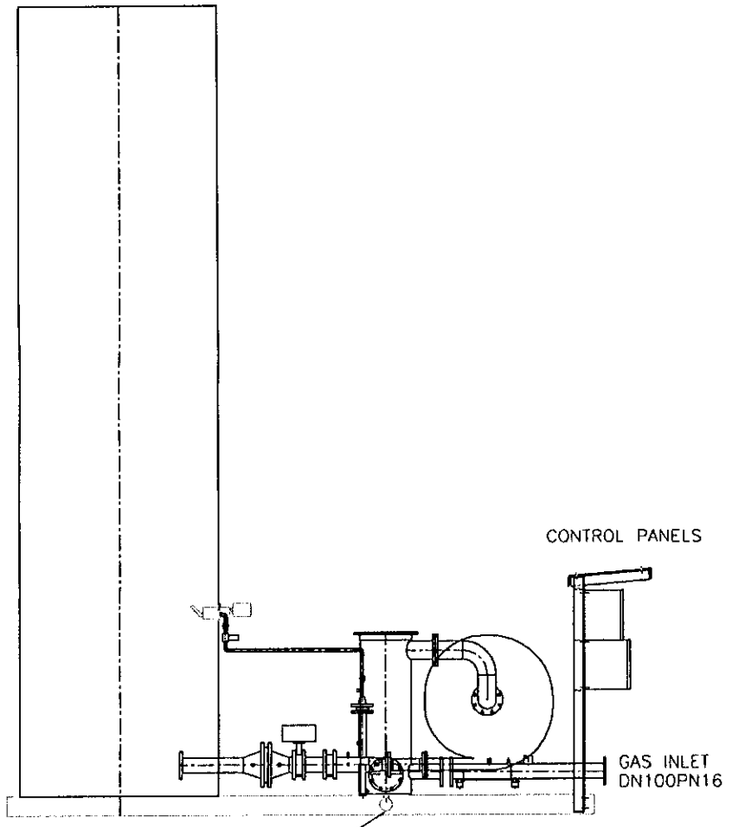


SECTION A–A

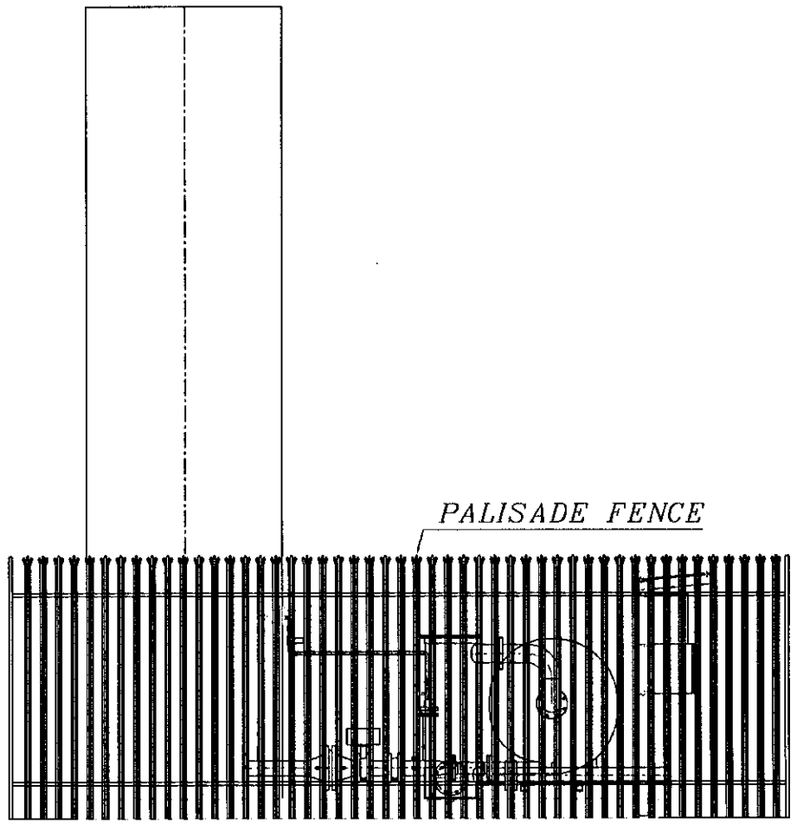


SECTION B–B

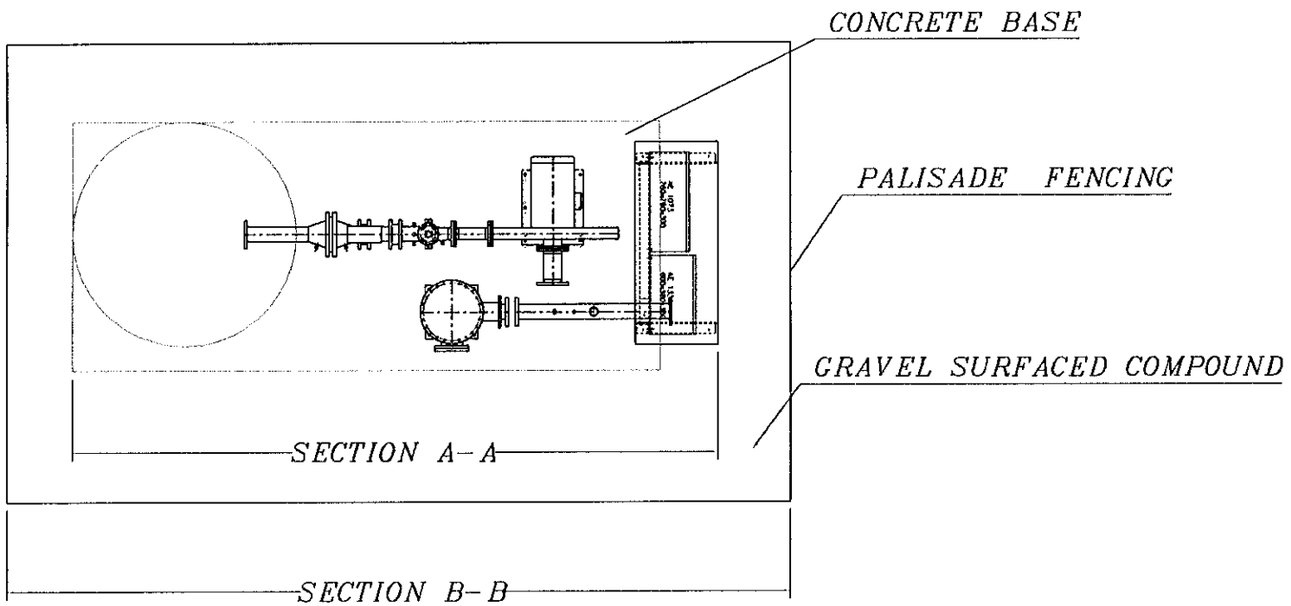


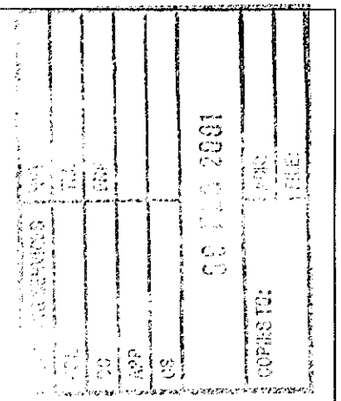

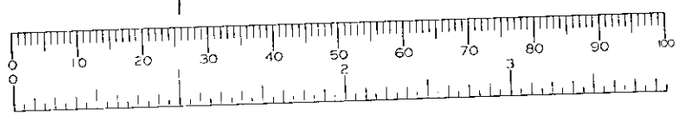

GRUNDON WASTE LTD

Title KNOWL HILL
GAS FLARE

Scale 1:50

APPROVED

Drawing No.
015/P/023

CAYTON PARK

RUPP 16

FP 41

FP 43

FP 42

Cell 7

Cell 6

Cell 5

Cell 3

Cell 4

Cell 2

Cell 1

L'' DENHILL WOOD

lake

MEADOW VIEW

HEDGEROWS

OAKFIELD

THE WAYS

HILL VIEW

SPRINGFIELD COTTAGE

SPRING HILL

POND

STABWORKS

Existing approved bunds

**KEY**

Application area

Ownership boundary

27 NOV 2000 2856

APPROVED

| | |
|---|---|
| Drawing Number: | LFG 1 |
| Company: | S. Grundon (Waste) Ltd |
| | Knowl Hill |
| Scale: | 1:2500 |
| | |
| Title: | Proposed Landfill Gas Flare |