

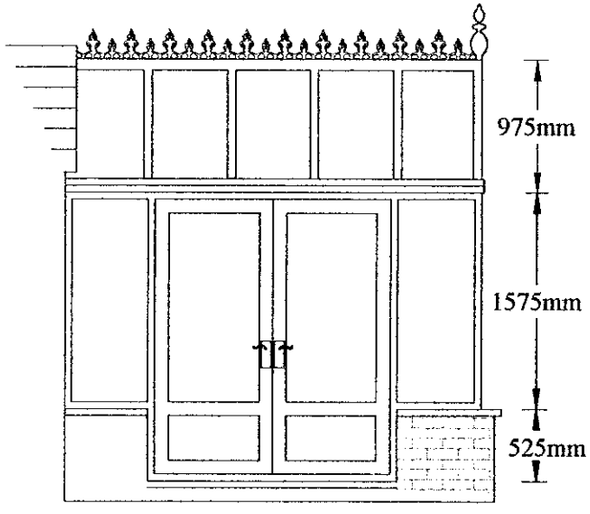

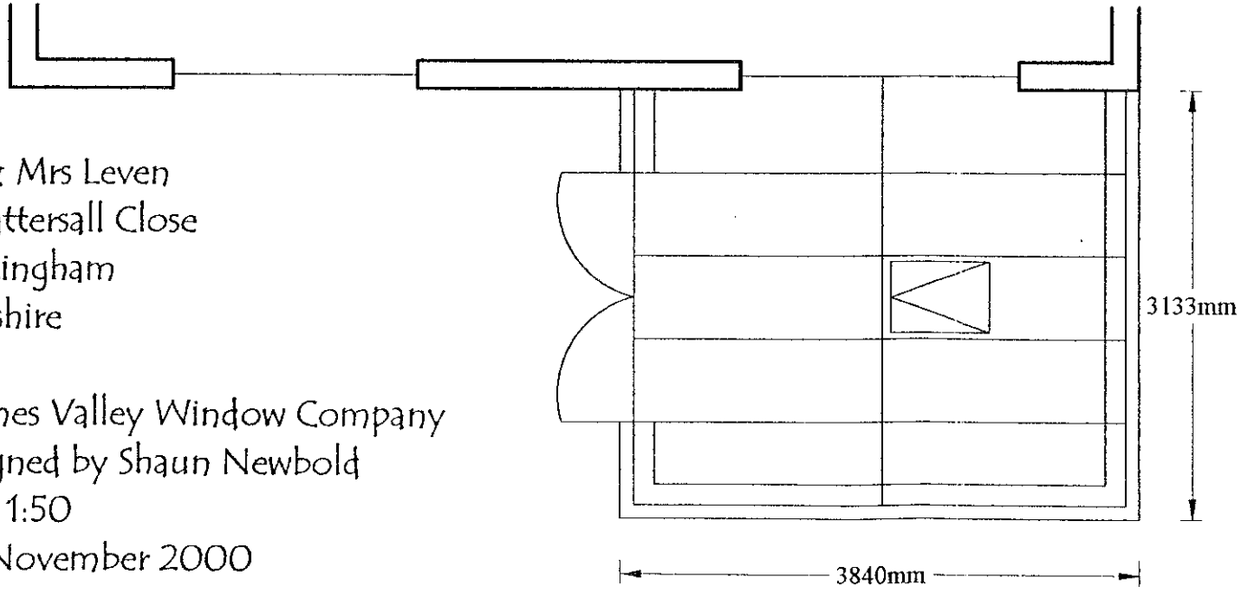

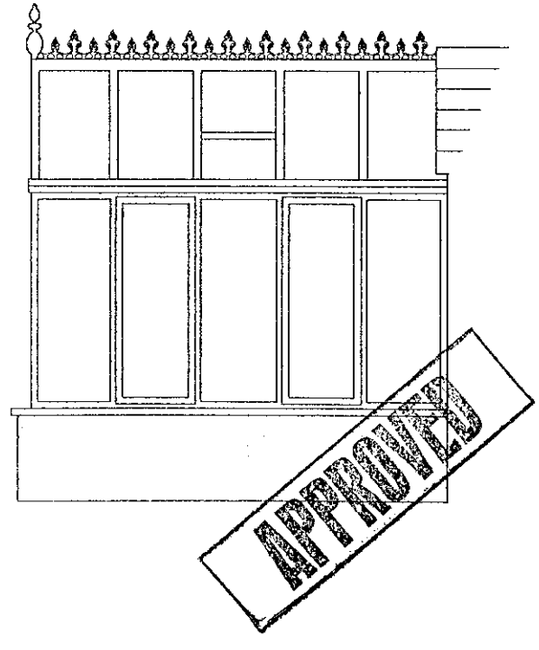

Mr & Mrs Leven
21 Tattersall Close
Wokingham
Berkshire

Thames Valley Window Company
Designed by Shaun Newbold
Scale 1:50
9th November 2000

