APPLICATION NO:
F/2002/5940

LOCATION:
Lodona Loddon Drive, Wargrave Reading.

APPLICANT:
Mr C Hicks C/O Paul Bell

PROPOSAL:
Proposed erection of triple garage.(Amendment to consent F/20014816)

EARLIEST DATE FOR DECISION: **25/03/2002**

APPLICATION WILL HAVE EXPIRED ON:
15/04/2002

CASE OFFICER: **Helen Pollock**

APPROVED

1057
DO

RAILEX

WOKINGHAM DISTRICT COUNCIL

TOWN AND COUNTRY PLANNING ACTS

Notification of Approval of Permission

Mr C Hicks
C/O Paul Bell
2A Abbots Place
West Hampstead
London
NW6 4NP

Application Number: F/2002/5940

Parish: **WARGRAVE**

Location: **Lodona, Loddon Drive, Wargrave, Reading.**

Proposal: **Proposed erection of triple garage.(Amendment to consent F/20014816)**

The Wokingham District Council in pursuance of their powers under the above Acts and Regulations hereby **Approve Permission** for carrying out the above development in accordance with the application and the accompanying plans submitted to the Council subject to compliance with the following conditions, the reasons for which are specified hereunder.

Condition
1. The development hereby permitted shall be begun before the expiration of five years from the date of this permission.

Condition
2. Before the building operations hereby permitted are commenced, samples and details of the proposed external materials shall be submitted to and approved in writing by the Local Planning Authority and no external materials shall be used other than those approved.

Condition
3. Immediately following the implementation of this permission, notwithstanding the provisions of the Town and Country Planning (General Permitted Development) Order 1995 (or any order revoking and re-enacting that order with or without modification) no buildings, extensions or alterations permitted by Classes A, B, C, D and E of Part 1 of the Second Schedule of the 1995 Order shall be carried out without the prior written permission of the Local Planning Authority.

Condition
4. Notwithstanding the provisions of the Town and Country Planning (General Permitted Development) Order 1995 (or any Order revoking and re-enacting that Order with or without modification) the garage accommodation on the site shall be kept

available for the parking of vehicles ancillary to the residential use of the site at all times. It shall not be used for any business nor as habitable space.

Condition
5. No part of any building(s) hereby permitted shall be occupied or used until the vehicle parking and turning space herein approved has been provided. The vehicle parking and turning space shall be permanently maintained and used for no other purposes.

Condition
6. The dwelling shall not be occupied until space has been provided within the curtilage for vehicles to turn so that they may enter and leave the site in a forward gear and this space shall thereafter be maintained at all times for this purpose.

Condition
7. Works related to the construction of the development hereby granted, including works of demolition or preparation prior to building operations, shall not take place other than between the hours of 8 am and 7 pm Monday to Friday and 8 am to 1.30 pm Saturdays and at no time on Sundays or Bank or National Holidays.

Condition
8. No materials produced as a result of the site development or clearance shall be burnt on site. All reasonable steps, including damping down site roads/tracks shall be taken to minimise dust and litter emissions from the site whilst works of construction and/or demolition are in progress.

Condition
9. Prior to the commencement of development, details of the slab levels of the proposed buildings shall be submitted to and approved in writing by the Local Planning Authority. The constructed development shall not vary from the approved levels.

Condition
10. No development shall take place until there has been submitted to and approved in writing by the Local Planning Authority a scheme of landscaping, which shall include indications of all existing trees and hedgerows on the land, and details of any to be retained, together with measures for their protection in the course of development; the approved landscaping scheme (with the exception of planting, seeding and turfing) shall be implemented prior to the occupation of any of the building(s) hereby approved and retained.

Condition
11. All planting, seeding or turfing comprised in the approved details of landscaping shall be carried out in the first planting and seeding seasons following the occupation of the buildings or the completion of the development, whichever is the sooner; and any trees or plants which within a period of 5 years from the completion of the landscaping die, are removed or become seriously damaged or diseased shall be replaced in the next planting season with others of similar size and species.

Condition
12. No trees, hedgerows or shrubs within the curtilage of the site, except those shown on the approved plan(s) or otherwise clearly indicated in the approved details as being removed, shall be felled, lopped or pruned, nor shall any roots be removed or pruned without the prior consent of the Local Planning Authority during development and for a period of five years after completion of the development hereby approved. The branch structure and trunks of the trees to be retained and their root systems shall be

protected from any damage during site works, in accordance with a scheme to be submitted to and approved in writing by the Local Planning Authority. Any trees, hedgerows or shrubs removed or which die or become dangerous, damaged or diseased before the end of a period of five years after completion of the development hereby approved shall be replaced with new trees, hedging or shrub species (of such size species and in such number and position as maybe agreed in writing), before the end of the first available planting season (1st November to 31st March) following their loss or removal.

Condition
13. The development shall not commence until details of external lighting have been submitted to and approved by the Local Planning Authority.

Condition
14. There shall be no raising of existing ground levels on the site.

Condition
15. No spoil or materials shall be deposited or stored on that part of the site lying within the area of land liable to flood.

Condition
16. Any walls or fencing constructed within or around the site shall be designed to be permeable to flood water.

Condition
17. The garage shall be constructed with the floor slab finished at existing ground level, and any arisings from excavation removed from the floodplain; and with two apertures in each of the three walls a minimum of one metre wide and extending from ground level up to the flood water level to allow free entry and egress of flood water; and with 150mm gaps left under the main garage doors for the same purpose.

Condition
18. A Buffer Zone 8 metres wide alongside the Addlestone Bourne shall be established in accordance with details which shall be submitted to and approved in writing by the Local Planning Authority before the development commences.
(Note: The Environment Agency asks to be consulted on any details submitted in compliance with this condition).

Condition
19. No soakaways shall be constructed such that they penetrate the water table, and they shall not in any event exceed 3 metres in depth below existing ground level.

Condition
20. The developer must not store materials within an 8 metre buffer zone to the river and should avoid gaining access in this zone. There must be no fires, dumping, storage of materials or tracking of machinery within the buffer zone which should be suitably marked and protected during development.

Reason
1. In pursuance of Section 91(1) of the Town and Country Planning Act 1990.

Reason
2. To ensure that the external appearance of the building is satisfactory.

Reason
3. To safeguard the character of the premises and the residential and visual amenities of the occupiers of adjoining properties.

Reason
4. To ensure that adequate parking space is available on the site, and reduce the likelihood of roadside parking.

Reason
5. To ensure a satisfactory form of development and to avoid adverse impact on the public highway in the interests of highway safety.

Reason
6. In the interests of highway safety and convenience.

Reason
7. To protect the occupiers of neighbouring properties from noise and disturbance outside the permitted hours during the construction period.

Reason
8. To ensure that no nuisance or disturbance is caused to the occupiers of neighbouring properties or the area generally.

Reason
9. In order to ensure a satisfactory form of development relative to surrounding buildings and landscape.

Reason
10. In the interests of visual amenity.

Reason
11. In the interests of visual amenity.

Reason
12. The existing trees/hedgerows/shrubs represent an important public visual amenity in the area.

Reason
13. To safeguard the amenities of neighbouring properties and the locality.

Reason
14. To prevent the increased risk of flooding due to impedance of flood flows and reduction of flood storage capacity.

Reason
15. To prevent the increased risk of flooding due to impedance of flood flows and reduction of flood storage capacity.

Reason
16. To prevent obstruction to the flow and storage of flood water, with a consequent increased risk of flooding.

Reason
17. To prevent the increased risk of flooding due to impedance of flood flows and reduction of flood water storage capacity.

Reason
18. To maintain the character of the watercourse and provide undisturbed refuges for wildlife using the river corridor.

Reason
19. To prevent pollution of groundwater.

Reason
20. To reduce the impact of the proposed structure on wildlife habitats upstream and downstream, including bank-side habitats.

Anna Cronin
Head of Planning & Transportation
Date: 12/04/2002

Notice checked by: _____

If this notice grants permission to proceed with the proposal the applicant is reminded that it relates to planning permission only and does not constitute approval under any other legislation including Building Regulations.

APPEALS TO THE SECRETARY OF STATE

PLANNING & ADVERTISEMENT APPEALS

1) If you disagree with the decision of the your local planning authority to refuse planning permission or you do not think that conditions placed on an approval are justified or reasonable, then you can appeal to the Secretary of State for the Environment, Transport and the Regions.

   If you want to appeal you must do so within **6 months** of the date of the decision notice for **planning applications** and within **8 weeks** in respect of **advertisement applications**, using a form you can get from The Planning Inspectorate. They can be contacted on (0117) 372 6373 or you can write to them at ; Temple Quay House, 2 The Square, Temple Quay, Bristol. BS1 6PN.

2) In some exceptional circumstances an appeal can be considered if more than 6 months or 8 weeks have elapsed since the date of your decision. If the 6 month/8 week time limit has expired and you wish to appeal please contact the Planning Inspectorate to find out if they are willing to accept it.

3) The Secretary of State does not have to consider an appeal if it appears that the local planning authority could not have granted planning permission for the proposed development or could not have approved permission without the conditions it imposed while having regard to the statutory *requirement of the development order or any directions given under the order. In practice* The Secretary of State does not normally refuse to consider appeals solely because the local planning authority based its decision on a direction given by him.

4) It is a statutory requirement for all appellants to copy their appeal forms direct to Wokingham District Council, Planning Services, P.O. Box 157, Civic Offices, Shute End, Wokingham, RG40 1WR, at the same time as the appeal is sent to the Planning Inspectorate. Details of this procedure will be included on the appeal forms.

PURCHASE NOTICES

1) If the local planning authority or the Secretary of State for the Environment, Transport and the Regions refuses permission to develop land or grants it subject to conditions, the owner may claim that the land cannot be put to a reasonably beneficial use in its existing state or cannot make the land capable of a reasonably beneficial use by the carrying out of any development which has been or would be permitted.

2) In these circumstances the owner may serve a purchase notice on the District Council in whose area the land is situated. This notice will require the Council to purchase an owners interest in the land in accordance with the provisions of Part XI of the Town and Country Planning Act 1971.

COMPENSATION

1) In certain circumstances compensation may be claimed from the Local Planning Authority if permission is refused or is granted subject to certain conditions by the Secretary of State for the Environment, Transport and the Regions on appeal or on reference of the application to him. These circumstances are set out in Section 114 and related provision of the Town and Country Planning Act 1990.

WORK SHEET FOR : Helen Pollock

Application Number : F/2002/5940

Applicant : Mr C Hicks C/O Paul Bell.

Location : Lodona, Loddon Drive, Wargrave, Reading.
Proposal : Proposed erection of triple garage.(Amendment to consent F/20014816)

Site Notice Displayed ? :

YES	NO	DATE
✓		2/4

Date of Neighbour Notifications : .....

Date of Site Visit : .....

Date Registered : 18/02/2002

Earliest Date for Decision : 25/03/2002

Latest Consultation Date/Site Notice Expiry Date : 25/03/2002

This application will have expired on: 15/04/2002. You need to make a decision 1 day prior to this date for this application to count as determined in less than 8 weeks.

Consultation Responses :

Highways : C/A

Trees : No objection.

E.A : C/A

Planning Issues :

Rural

flood..

Application Number: F/2002/5940

Appraisal :

The proposed development is for the re-positioning of the previously approved triple garage. The ~~proposed~~ approved garage was to be positioned adjacent to Ladden Drive. It is now proposed to re-position the garage back into the plot level with the front building line of the new property which is currently under construction.

The dimensions of the garage remain the same as those previously approved + only the location will be altered.

It is considered that the proposed would have no impact upon the area, as the new location will be partially over the location of the original garage + the dimensions remain the same. The new location would actually mean the garage is less visually intrusive that the previously approved location adjacent to Ladden Dr.

The E.A reccomend C/A + have no objection to the proposal provided conditions are imposed.

The proposed re-location would have no impact on the neighbouring properties, as the previous garage was in a very similar location + the nearest neighbouring property is some 20+m away.

Recomendation : Approval: ☑ **Refusal:** ☐
(tick appropriate box)

Application Number F/2002/5940
Conditions/Reasons for Refusal

No	Std Con	Std Reas	Non Std Conditions / Reasons for Refusal
1	C005	R005	
2	C014	R014	
3	C049	R049	All Conditions As
4	C138	R138	
			Application No
5	C040	R040	
6	C122	R122	F/2001/4816.
7	C137	R137	
			(Copy of which is in file).
8	C070	R070	
9	C100	R100	
10	C150	R150	
11	C157		

Informative for approvals
N16
LODDON AREA LOCAL PLAN POLICIES:
SOUTH-EAST AREA LOCAL PLAN POLICIES:
WOKINGHAM DISTRICT LOCAL PLAN POLICIES:
GREEN BELT LOCAL PLAN POLICIES:
BERKSHIRE STRUCTURE PLAN POLICIES:
MINERALS LOCAL PLAN POLICIES:

RECOMMENDATION AND CONDITIONS/REASONS AGREED: A Corwin
(Development Control Manager)

Date: 12.4.02

RECORD OF SITE VISIT

SITE ADDRESS: Lodona Loddon Drive Wargrave Reading.

APPLICATION NUMBER: F/2002/5940

OFFICER: Helen Pollock

DATE OF SITE VISIT: 21/1/02

1 SITE/STATUTORY NOTICE DISPLAYED ? Yes

2. DESCRIPTION OF SURROUNDINGS

Rural

3. DESCRIPTION OF SITE/BUILDING

Site cleared ready for new dev. — Construction underway.

4. RELATIONSHIP TO ADJOINING PROPERTIES

See map.

5. SITE CONSTRAINTS

TREES None to be affected.

ACCESS/PARKING Ample.

LEVELS ———

BOUNDARY TREATMENT Conforms to boundaries

OTHERS

TO: DEVELOPMENT CONTROL FROM: Environmental Design

Helen Pollock DATE: 2nd April 2002

Location:	Lodona, Loddon Drive, Wargrave, Reading
Proposal:	Proposed erection of triple garage. (Amendment to consent F/2001/4816)
Application Number:	F/2002/5940

In response to your consultation dated 4th March 2002 for the above application, the tree and landscape comments are as follows:

The revised location of the garage doe not directly affect any significant landscape features and I do not wish to raise an objection to the granting of planning consent for this structure.

However, I have now commented on the planning application and subsequent revisions on a number of occasions. I have requested that the important boundary trees to the west (adjacent to Loddon Drive) are protected in accordance with BS 5837: 1991 - Trees in Relation to Construction during the building works. During my site visit I noted that the trees are **not** being protected by appropriate fencing and that construction materials are being stored under the canopy line of these important trees.

Can I please ask you to check if a condition was attached to the granting of planning consent to ensure tree protection and if so, please take the appropriate enforcement action.



ROBERT PETROW
Consultant Landscape Architect

PLANNING SERVICES	54934
POL	TLS
DC 4P	ENF
APP	
CS	
05 APR 2002	
COPIES TO	

ENVIRONMENT AGENCY

Our Ref : SP/2002/005414-1/1
Your Ref : F/2002/5940

Date : 03 April 2002

District Planning Officer
Wokingham District Council
Council Offices
PO Box 157 Shute End
Wokingham
Berkshire
RG40 1WR

Dear Helen Pollock

PROPOSAL: ERECTION OF TRIPLE GARAGE, AMENDMENT TO CONSENT
LOCATION: F/2001/4816 LODONA, LODDON DRIVE, WARGRAVE, READING

Thank you for your letter dated 4 March 2002, received on 6 March 2002. Please quote the following reference in any correspondence: SU77NE/18/23.

The Environment Agency has no further comments to add to its previous letters dated 12 October 2001 and 26 March 2001 regarding your consultations, references F/2001/4816 and F/2001/3411 respectively.

DECISION NOTICE

Please forward a copy of the decision notice to this office quoting our reference. If you have any further queries, please contact me, quoting the reference at the beginning of this letter.

Yours sincerely

JO MARSHALL
Development Planning Officer

Direct dial: 01276 454323
Direct fax: 01276 454352
Email: joanna.marshall@environment-agency.gov.uk

CC: Paul Bell Architects

HIGHWAYS CONSULTATION SHEET

From: Helen Pollock **Date:** 04 March 2002

Application Number: F/2002/5940

Proposal: Proposed erection of triple garage.(Amendment to consent F/20014816)

Parish: WARGRAVE PARISH

Site Address:
Lodona, Loddon Drive, Wargrave, Reading.

Applicant:
Mr C Hicks C/O Paul Bell.

Your observations are required in respect of this application within **7 days** of the above date.

✓ below as applicable;

1) ☐ Recommend refusal for the reason(s) **stated below**;
2) ☑ Recommend approval but with condition(s) & reason(s) **stated below**;
3) ☐ Recommend approval with **no** condition(s) or reason(s).

C049, R049
C138, R138.

Signed: _____ **Print name:** Adam 6/3/02.

Received by Wokingham District Council

Application No: F/2002/5940

Proposal:
Proposed erection of triple garage.(Amendment to consent F/20014816)

Location:
Lodona, Loddon Drive, Wargrave, Reading.

The application is available for inspection at Wokingham District Council's offices during the following times:

PLANNING DEPARTMENT, SHUTE END, WOKINGHAM TEL (0118) 974 6428
8.30 - 5.00 Monday - Thursday & 8.30 - 4.00 Friday

WOODLEY LIBRARY HEADLEY ROAD WOODLEY 9.30am - 7.00pm Mon, Thurs & Fri. 9.30am - 5.00pm Tues, 9.30am - 1.00pm Saturday and 1.00pm - 4.00pm Sunday. Library closed all day Wednesday. If you intend to view this application at Woodley Library please allow 4 days from the date of this letter for delivery of plans and remember to quote application number F/2002/5940 to enable the library staff to locate the correct information.

Comments should be sent in writing QUOTING THE APPLICATION NUMBER to the Case Officer Helen Pollock P.O. Box 157 Council Offices, Shute End, Wokingham Berkshire, RG40 1WR to arrive on or before 25/03/2002. Written comments submitted will become available for public inspection.

In view of the very large number of planning applications and letters of comment received, it will not be possible for an individual reply to be issued to observations made. However any comments will be taken into account when the application is determined and you will be notified of the decision.

Head Planning and Transportation

04 March 2002

**********FILE COPY**********

Tel: 0118 974 6480

Date: 04 March 2002

My ref: F/2002/5940

WOKINGHAM UNITARY
Aiming for Excellence

Environmental Services Department
Planning Services
P.O. Box 157
Shute End, Wokingham
Berkshire RG40 1WR
Tel: (0118) 974 6000
Fax: (0118) 974 6484
Minicom No: (0118) 974 6991
DX: 33506 – Wokingham

Councillor Etheridge
41a Bearwood Road
Barkham
Berks
RG41 4SX

Dear Councillor

Application Number: F/2002/5940
Lodona, Loddon Drive, Wargrave, Reading.
Proposed erection of triple garage.(Amendment to consent F/20014816)

I write to let you know that the above mentioned application has been received.

At this stage a recommendation has not yet been made. This form should only be returned if it is likely that you might wish for the application to be listed for consideration by the Development Control Committee. This form must be received no later than 28 days from the date of this letter.

If you have concerns about the proposals it may be possible for these to be addressed during the consideration of the application. In these circumstances it would be helpful if you could discuss these with the case officer **Helen Pollock** on **0118 974 6480** in the first instance.

Yours sincerely
Trevor Watson
Development Control Manager

LISTING FORM
Case officer: **Helen Pollock** Application Number: **F/2002/5940**
Lodona, Loddon Drive, Wargrave, Reading.
Proposed erection of triple garage.(Amendment to consent F/20014816)
I wish this application to be listed should the officers recommendation be for: GRANT/REFUSAL and my reasons are:

_____

_____

Should the officers recommendation be in accordance with my views I am happy for the application to be determined under delegated powers. YES/NO

Signed: _____ Date: _____

Councillor Etheridge

**********FILE COPY**********

**********FILE COPY**********

Tel: 0118 974 6480

Date: 04 March 2002

My ref: F/2002/5940

WOKINGHAM UNITARY
Aiming for Excellence

Councillor Browne
The Old Coach House
Remenham Hill
Remenham
Berks
RG9 3EP

Environmental Services Department
Planning Services
P.O. Box 157
Shute End, Wokingham
Berkshire RG40 1WR
Tel: (0118) 974 6000
Fax: (0118) 974 6484
Minicom No: (0118) 974 6991
DX: 33506 – Wokingham

Dear Councillor

Application Number: F/2002/5940
Lodona, Loddon Drive, Wargrave, Reading.
Proposed erection of triple garage.(Amendment to consent F/20014816)

I write to let you know that the above mentioned application has been received.

At this stage a recommendation has not yet been made. This form should only be returned if it is likely that you might wish for the application to be listed for consideration by the Development Control Committee. This form must be received no later than 28 days from the date of this letter.

If you have concerns about the proposals it may be possible for these to be addressed during the consideration of the application. In these circumstances it would be helpful if you could discuss these with the case officer **Helen Pollock** on **0118 974 6480** in the first instance.

Yours sincerely
Trevor Watson
Development Control Manager

LISTING FORM
Case officer: **Helen Pollock** Application Number: **F/2002/5940**
Lodona, Loddon Drive, Wargrave, Reading.
Proposed erection of triple garage.(Amendment to consent F/20014816)
I wish this application to be listed should the officers recommendation be for: GRANT/REFUSAL and my reasons are:

_____

_____

Should the officers recommendation be in accordance with my views I am happy for the application to be determined under delegated powers. YES/NO

Signed: _____ Date: _____

Councillor Browne

**********FILE COPY**********

Application Number : F/2002/5940	**Map No :** 20
Case Officer : HP	**Site Area :** 0·36
Valid Date : 18 FEB 2002	**Received Date: 18/02/2002**

Level : Delegated Application

Description : Proposed erection of triple garage. (amendment to F/2001/4816)

Location : Lodona, Loddon Drive, Wargrave, Reading.

Parish : WA **Ward : WAR** 4/3/02 -D.

Applicant : Mr C Hicks C/O Paul Bell.

Fee Required: £95 **Fee Received: £95** (7)

Additional: ..... or Refund: .....

Enforcement Section to be notified ☐ (tick if required)

Additional information required for validation;

REASON	NOTES	DATE REQ	DATE RECD
LOCATION PLANS			
BLOCK PLANS			
FORMS UNSIGNED			
S.66 MISSING/INCORRECT/ UNSIGNED			
ELEVATION PLANS			
FLOOR PLANS			
NO SCALE OR SCALE IS IMPERIAL			
ENCROACHMENT LETTER REQUIRED			
OTHER			

Is the site in a Conservation Area: ☐ Yes ☐ No If "Yes" which one _____

Is the site a Listed Building: ☐ Yes ☐ No

Is a Statutory Advertisement required: ☐ Yes ☐ No

INTERNAL CONSULTATIONS 4.8.02 AB.

Building Control

Heritage (Harold Sanders)

Landscape 4.

Trees

Environmental Health

Housing

Leisure & Cultural Services

Public Rights of Way Officer

Property

Policy & Plans

Joint Strategic Planning Unit

Archaeological Officer (BABTIE)

Education

Social Services

Highways

EXTERNAL CONSULTATIONS

Adjacent DPA : _____

Adjacent Parish : _____

SEB

British Gas

Oil pipeline

Transco

Environment Agency Flood zone Ground water Protection Zone

Railtrack

Police Arch Officer

HERITAGE BODIES

Victorian Society
The Georgian Group
Ancient Monuments Society
Council for British Arch
RCHME
NRPB (Telecommunications)
Sport England
Society for Proct' of Ancient Bldgs
English Heritage

OTHERS

.....

Rural Area Countryside

.....

.....

.....

.....

NEIGHBOURS

.....

S/N + See map

.....

No new pre-apps.

5940

Environmental Services

For office use only.
Application number: 18 FEB 2002* 5940

Householder planning application form

Please answer all questions in CAPITAL letters.
If any question does not apply to you, put N/A in the space.
Please send six copies of the filled in form and your plans to the address on the front of the folder.
We provide guidance notes to help you fill in the form. If you have any questions, please call Planning Support on 0118 974 6428 or 0118 974 6429.

WOKINGHAM UNITARY
Aiming for Excellence

1	Your name Address and postcode Phone number	MR CLIVE HICKS THE STUDIO, BARNACRE LODDON DRIVE WARGRAVE, BERKS RG10 01189 406895.
2	Agent's Name Address and postcode Phone number	PAUL BEW ARCHITECTS. 2A ABBOTS PLACE WEST HAMPSTEAD LONDON NW6 4NP 020 7691 3248
3	Site We need you to send in six copies of the 1:2500 scale location plan and six copies of the 1:500 scale block plan, with the site outlined in red. You can buy these maps from the Environmental Services reception or order them by phoning 0118 974 6485.	LODONA LODDON DRIVE WARGRAVE BERKS RG10
4	Give brief details of the proposal for example, two storey side extension. About the application	REVISED GARAGE LOCATION FURTHER TO PREVIOUS PLANNING APPROVAL.
5	Are there any trees on the site? If Yes, please show their positions, spread and species of the trees on the plans. Say which trees you plan to cut down.	Yes ☑ No ☐
6	Please list the external materials you will use for example, red brick to match any existing bricks and dark stained timber.	RED BRICK, OAK CLADDING & NATURAL SLATE ROOF ALL TO MATCH MATERIALS APPROVED FOR HOUSE.
7	Will the proposal change the pedestrian or vehicle access to the site? Please show details of the existing access and any proposed changes on the plans.	Yes ☐ No ☑
8	Will the car parking provision at the site be changed? If Yes, please show details of any changes on the plans.	Yes ☑ No ☐

3544 Crystal Mark
Clarity approved by Plain English Campaign

Please turn over

9	How many bedrooms does the property have?	Existing: 5	Proposed: 5
10	Does a public right of way touch the site? If yes, please show the route and any proposed alternative on the plans.	Yes ☐	No ☑
11	Checklist. Please make sure that you enclose the following.		
	a Six copies of this form signed and dated.		
	b The fee (We have attached a current scale of fees). If you do not have to pay a fee, please say why below.		
	c Six copies of each set of plans and drawings listed below.		
	• 1:2500 scale location plan with the site outlined in red.		
	• 1:500 scale site layout plan.		
	• 1:100 or 1:200 scale floor plans and elevations.		

12 Certificate of ownership (Section 66 Town & Country Planning Act 1990)
Please delete either certificate A or certificate B. If neither apply, you must fill in a full certificate which you can get from Environmental Services.

(Owner means a person with a freehold interest, or someone who is a leasehold tenant with at least seven years left on their agreement)

Certificate A

I certify that

- At the beginning of the period of 21 days ending with the date of the application nobody, except the applicant, owned any part of the land which the application relates to.
- None of the land forms part of an agricultural holding.

Certificate B

I certify that

- I or the applicant has given the necessary notice to everyone else who (at the beginning of the period of 21 days ending with the date of the application) owned any part of the land which the application relates to as listed below.

Owner's name	Address at which the notice was served	Date on which the notice was served

None of the land forms part of an agricultural holding.

Your signature: P D BELL.

on behalf of MR C HICKS

Date 15.02.02

Please tick this box if you or your husband, wife or partner are employed by Wokingham District Council ☐

(1) ADDRESS ~~GREENGATES~~ LODON A LODDON DRIVE PARISH ~~SONNING~~ WARGRAVE E

PLOT No. RENAMED - 28.10.85 ORD. SHEET No. 3 7778 20

BUILDER

Plan No.	Applicant	Description of Development	Date of Decision	Decision
991/56	Capt. Trevor Williams	Reconstruction of Bungalow	18.1.57.	APP. APP
(R/140/59 X)	Mrs. M.D. Williams	Add to garden annexe	4.10.59.	APP. C/A
R/92/62	Mrs M.D. Williams	Ext. and alt.	21.12.62.	APP. APP
PD/562/64	Mrs. Trevor Williams	addition	1.10.64.	APP. PD.
O/140/67.	Mrs. M.D. Williams	Bung for garden land adj on R/140/69.	3.8.67.	N/A. REF
(R/259/68 X)	Air Vice Marshall Barker.	Removal of restriction on	14.8.68	N/A. REF
(R/17/69 X)	" "	" "	28.3.69.	N/A APP
23316	MR. R. WOODWARD	MOORING OF BOAT	24.4.85	N/A REF
25523 SEE LILYPADS ~~THE CABIN~~	N/P			
26204 SEE LILYPADS ~~SEE THE CABIN~~				
7305			4.11.88	C/A
BRA5667	MR. SIDDIQUI	GARAGE	28.7.88	APP

DATE OF COMPLETION

MINISTRY DECISION

SPECIAL ORDERS

DRAINAGE

091074

X SEE THE CABIN

1933 (2) LODON-A

ADDRESS LODDON DRIVE PARISH WARGRAVE

PLOT No. ORD.SHEET No.

Planning No.	Building No.	Applicant	Description of Development	Date	Decision Building	Decision Plannin
F/2001/3411		Mr. C. Hicks	Erect Det. Dwelling & Garage & demolish dwelling	02/05/01		C/A
F/2001/4816		"	Erect det. dwelling & garage + demolish dwelling (Amend. to 3411)	28.12.01		C/
F/2002/5940		"	Erect triple garage			

MINISTRY DECISION:

SPECIAL ORDERS:

18.FEB. 5940

NEW MATURE AESCULUS HIPPOCASTARUM.

EXISTING POOR QUALITY BOUNDARY HEDGE TO BE GRUBBED OUT AND RELACED WITH NEW PRUNUS LAUROCERASUS HEDGING 1.2m HIGH WITH TEMPORARY WILLOW WEAVE PANELS.

ELEVATED FLOATING PLATFORMS TO OUTDOOR LIVING ROOM WITH EXISTING SITE LEVELS RUNNING THROUGH BENEATH.

ELEVATED FLOATING DINING TERRACE WITH EXISTING SITE LEVELS RUNNING THROUGH BENEATH.

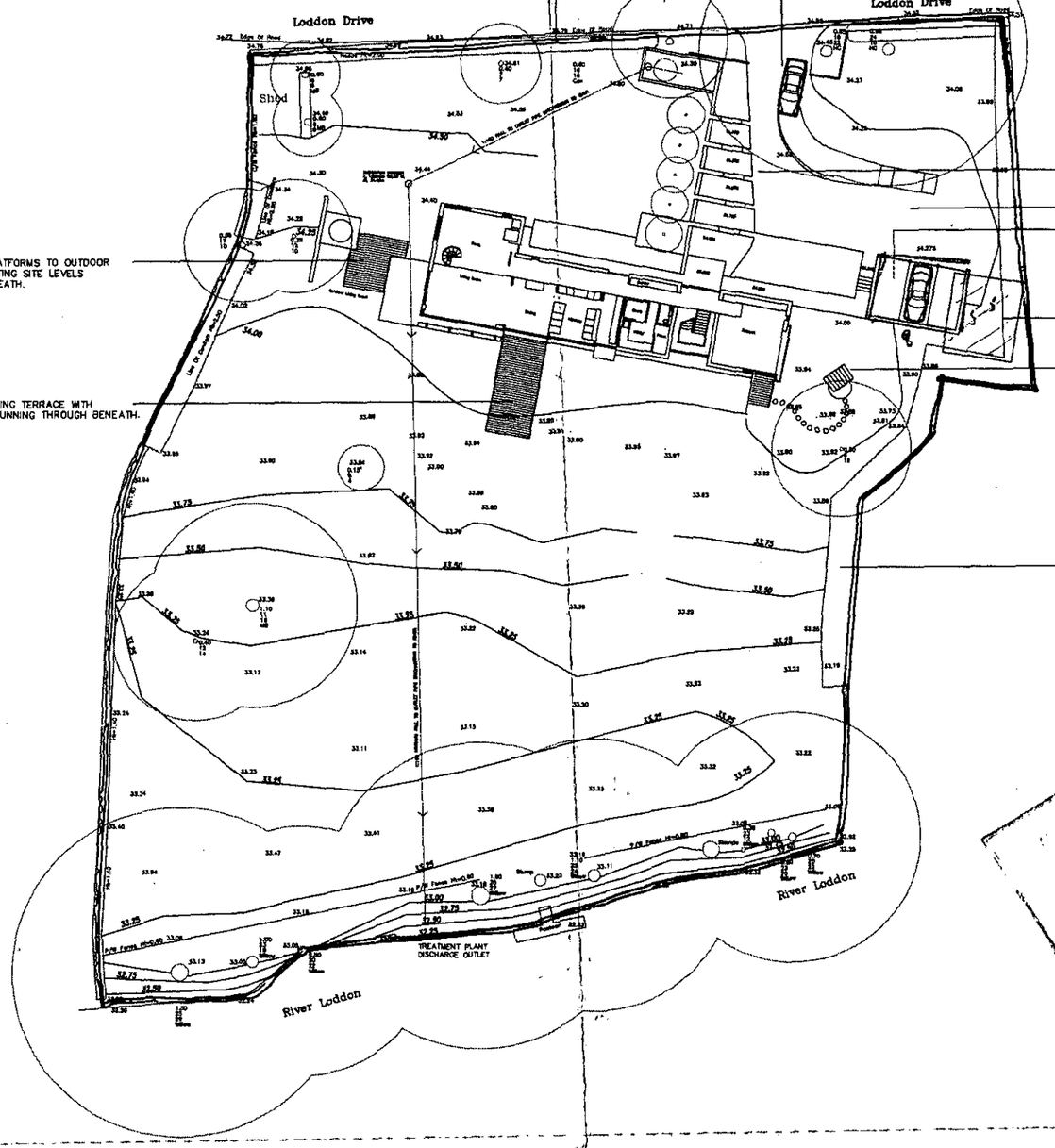

SLIDING METALWORK ENTRANCE GATES.

BLACK SLATE STEPS UP TO MAIN ENTRANCE WITH INSET PLANTED STRIPS.

GRAVEL SURFACED ENTRANCE COURTYARD.

PROPOSED REVISED GARAGE LOCATION.

EXISTING GARAGE LOCATION.

RETREAT GARDEN AT EXISTING SITE LEVELS.

EXISTING LINE OF LEYLANDII CONIFERS TO BE FELLED AND GRUBBED OUT. TO BE REPLACED WITH NEW PHYLLOSTACHYS NIGRA AND P.AUREA HEDGE TO A HEIGHT OF 2m.

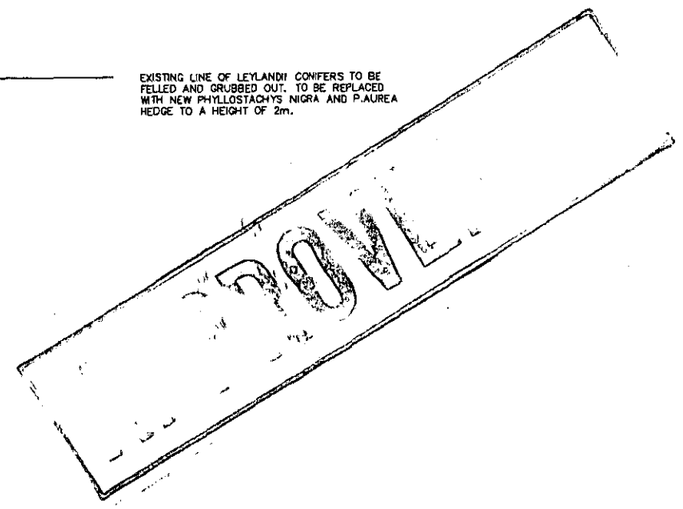

North

A	16.08.01	PLANNING ADDENDUM ISSUE. LANDSCAPE PROPOSALS REVISED AND CLARIFIED.. TREATMENT DISCHARGE OUTLET TO RIVER INDICATED. GARAGE LOCATION REVISED. ENTRANCE POSITION REVISED.	C	15.02.02	GARAGE LOCATION AND ENTRANCE ARRANGEMENT REVISED. ISSUED FOR PLANNING APPROVAL.
B	11.10.01	ROUTE OF DISCHARGE PIPE UPDATED			

NOTES:
1. THE ARCHITECT SHALL BE NOTIFIED OF ANY DISCREPANCIES IN WRITING
2. DO NOT SCALE OFF DRAWINGS

© PAUL BELL ARCHITECTS 2001

Title SITE PLAN
Drg No. LOD - 101 **Rev** C
Scale 1:500 **Date** AUG 2001

LODONA WARGRAVE

Paul Bell Architects 2a Abbot's Place, London, NW6 4NP. tel / fax: 020 7691 3248 e-mail: pbarch@tiscali.co.uk

0 10 20 30 40 50 60 70 80 90 100

34.400

34.525

34.650

34.775

34.900
Stone
Entrance
Steps

35.025

34.900

Grassed Area

Store

Utility

Plant.

Retreat

34.50

34.27

34.08

34.25

Grass / Soft
Landscaping

33.99

nce Ht=1.65

18.FEB.2002

33.95

Gravel
Entrance
Courtyard

34.275

34.275

Retreat

North

A	30.08.01	PLANNING ADDENDUM ISSUE. GARAGE POSITION REVISED.	
B	15.02.02	GARAGE POSITION REVISED ISSUED FOR PLANNING APPROVAL	

NOTES:
1. THE ARCHITECT SHALL BE NOTIFIED OF ANY DISCREPANCIES IN WRITING
2. DO NOT SCALE OFF DRAWINGS

© PAUL BELL ARCHITECTS 2001

Title GARAGE PLAN

Drg No. LOD - 107 **Rev** B

Scale 1:100 **Date** AUG 2001

LODONA
WARGRAVE

Paul Bell Architects 2a Abbot's Place, London, NW6 4NP. tel / fax: 020 7691 3248 e-mail: pbarch@tiscali.co.uk

18.FEB.2002* 5940

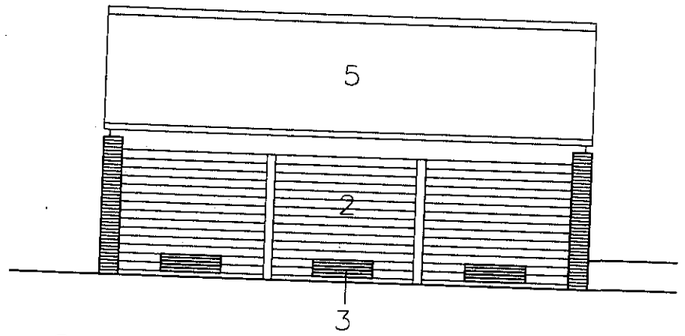

Garage - West Elevation

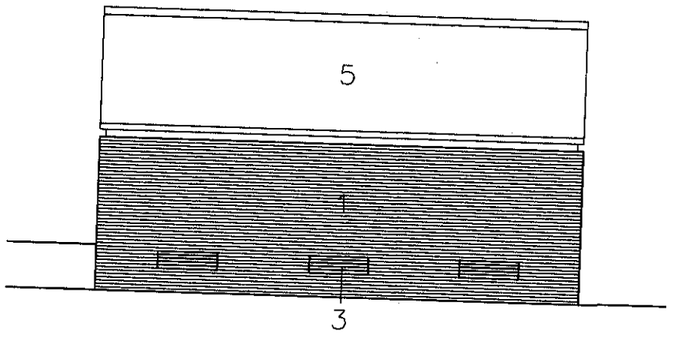

Garage - East Elevation

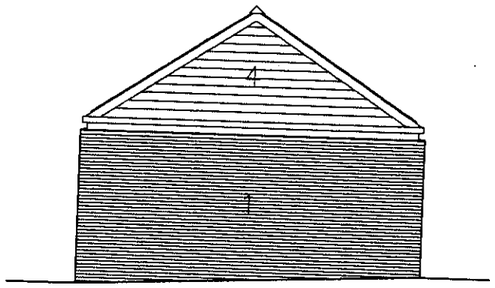

Garage - North Elevation

1. Red Brick to match brickwork to house
2. Timber Boarded Doors to match first floor cladding of house
3. Painted Metal Grilles to flood openings
4. Oak timber bording to match cladding to first floor of main house
5. Natural Slate roof to match roof to main house

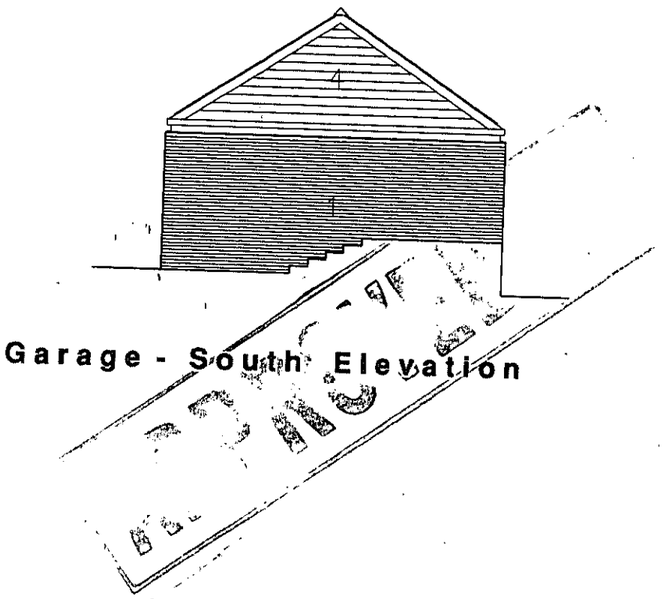

Garage - South Elevation

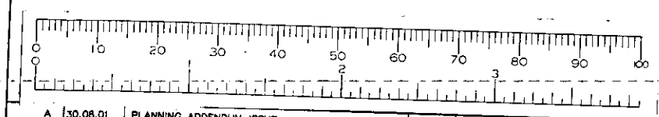

A	30.08.01	PLANNING ADDENDUM ISSUE. GARAGE POSITION REVISED. ELEVATIONS REVISED TO INCORPORATE FLOOD APERTURES.			
B	15.02.02	GARAGE POSITION REVISED. ELEVATIONS REDESIGNED. ISSUED FOR PLANNING APPROVAL.			

NOTES:
1. THE ARCHITECT SHALL BE NOTIFIED OF ANY DISCREPANCIES IN WRITING
2. DO NOT SCALE OFF DRAWINGS

© PAUL BELL ARCHITECTS 2001

Title GARAGE ELEVATIONS

Drg No. LOD - 118 **Rev** B

Scale 1:100 **Date** AUG 2001

LODONA WARGRAVE

Paul Bell Architects 2a Abbot's Place, London, NW6 4NP. tel / fax: 020 7691 3248 e-mail: pbarch@tiscali.co.uk

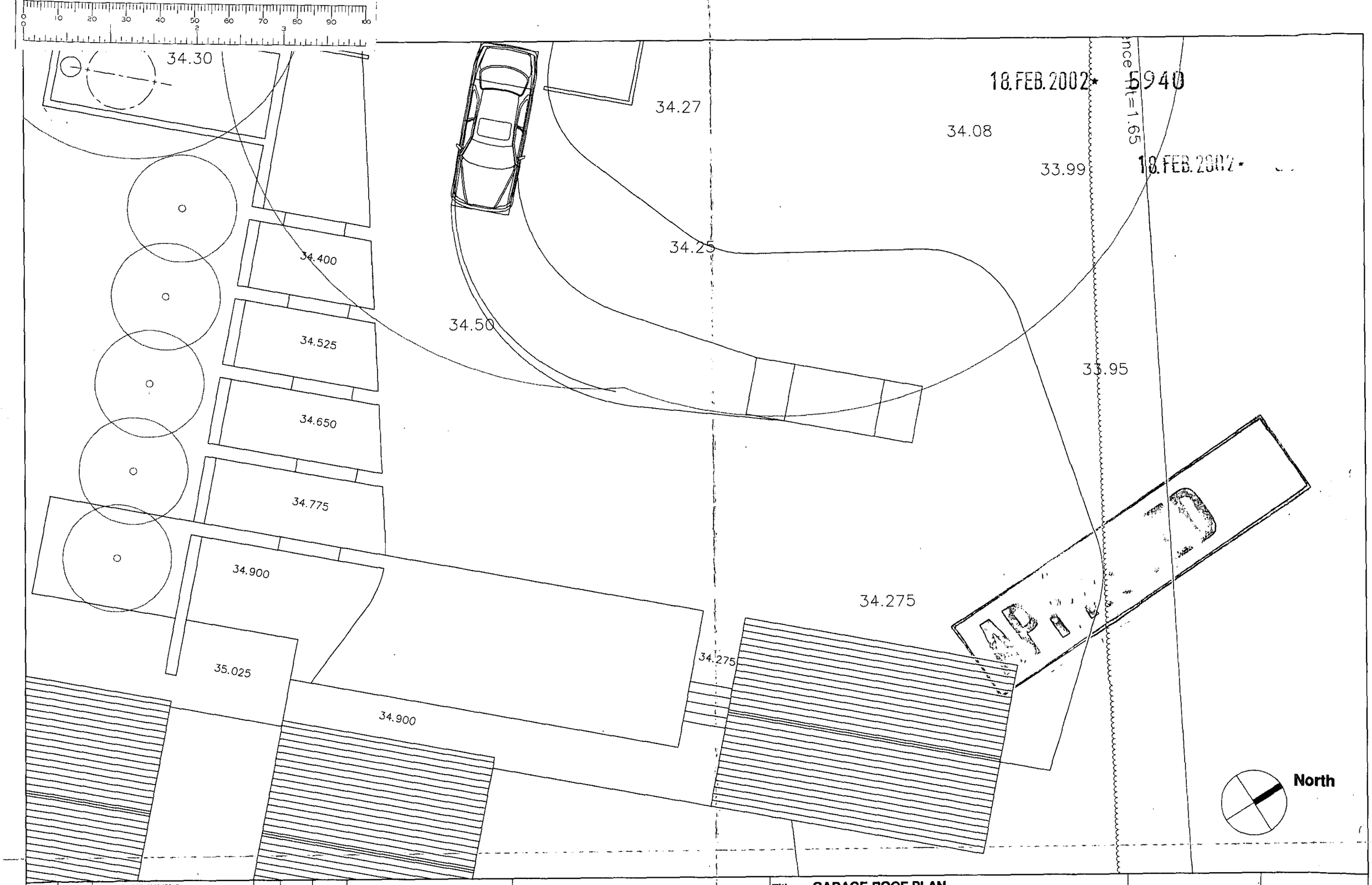

A	30.08.01	PLANNING ADDENDUM ISSUE. GARAGE POSITION REVISED.
B	15.02.02	GARAGE POSITION REVISED. ISSUED FOR PLANNING APPROVAL.

NOTES:
1. THE ARCHITECT SHALL BE NOTIFIED OF ANY DISCREPANCIES IN WRITING
2. DO NOT SCALE OFF DRAWINGS

© PAUL BELL ARCHITECTS 2001

Title	GARAGE ROOF PLAN		
Drg No.	LOD - 108	Rev	B
Scale	1:100	Date	AUG 2001

LODONA WARGRAVE

Paul Bell Architects 2a Abbot's Place, London, NW6 4NP. tel / fax: 020 7691 3248 e-mail: pbarch@tiscali.co.uk

18.FEB.2012 5940

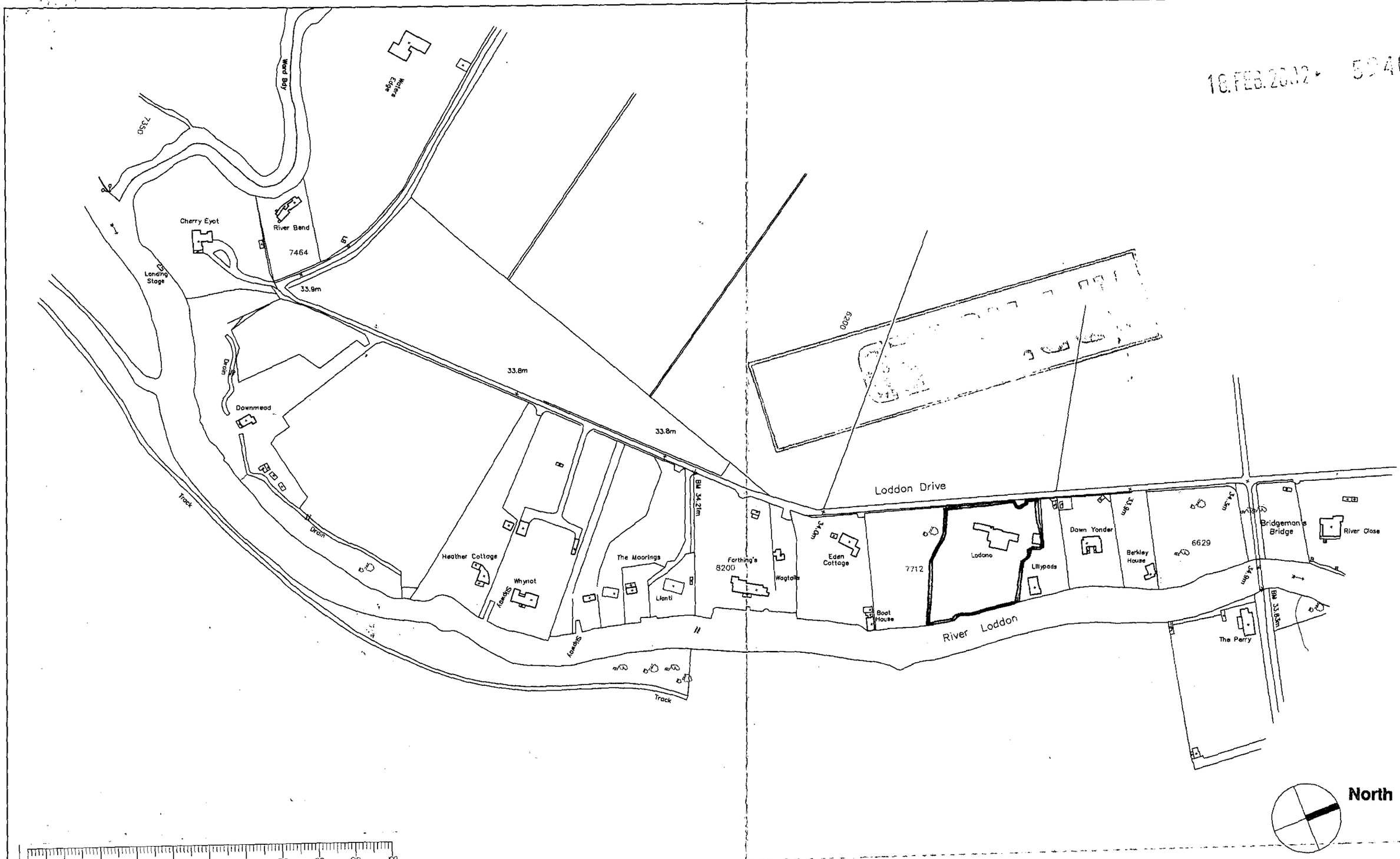

NOTES:
1. THE ARCHITECT SHALL BE NOTIFIED OF ANY DISCREPANCIES IN WRITING
2. DO NOT SCALE OFF DRAWINGS

© PAUL BELL ARCHITECTS 2001

Title	LOCATION PLAN		LODONA WARGRAVE
Drg No.	LOD - 001	Rev	
Scale	1:2500	Date OCT 2001	

Paul Bell Architects 2a Abbot's Place, London, NW6 4NP. tel / fax: 020 7691 3248 e-mail: pbarch@tiscali.co.uk

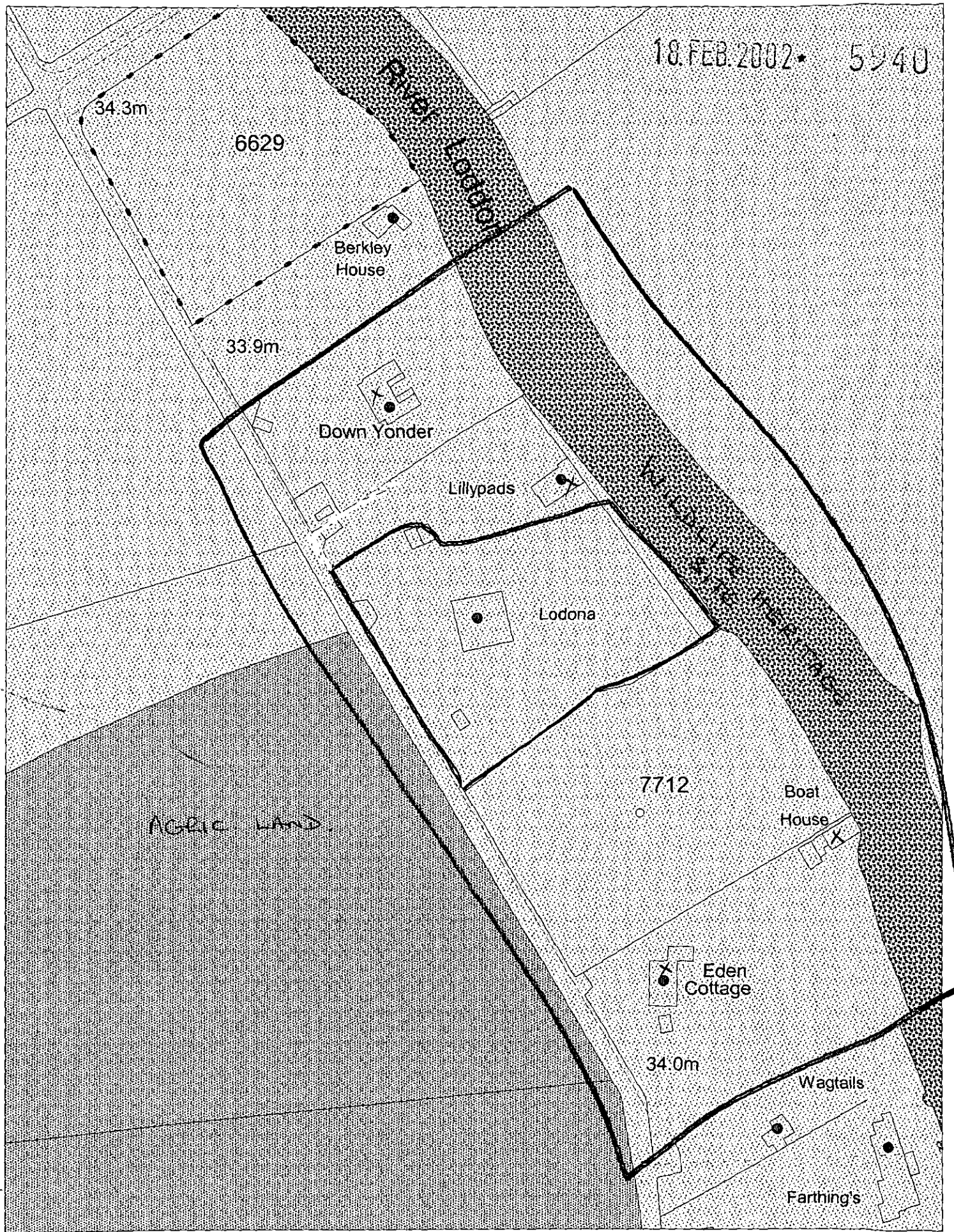

This map is based upon Ordnance Survey material with the permission of Ordnance Survey on behalf of the Controller of HMSO. © Crown Copyright. Unauthorised reproduction infringes Crown Copyright and may lead to prosecution or civil proceedings. Wokingham District Council Licence LA086134

Development Control Section, Environmental Services, Wokingham District Council.

21 February 2002 Scale: 1 : 1250