APPLICATION NO:

F/2001/3331

LOCATION:

Woodside Beggars Hill Road, Lands End, Twyford Reading.

APPLICANT:

Mr C Solesse Mr P Collins Of Troika Design And Management

PROPOSAL:

Proposed erection of new dwelling. Demolition of existing dwelling and outhouses. (Amendment to consent 2000/0465)

EARLIEST DATE FOR DECISION: **11/03/2001**

APPLICATION WILL HAVE EXPIRED ON:
05/04/2001

CASE OFFICER: **Joss Miller**

D3

1405

(JM)

WOKINGHAM DISTRICT COUNCIL

TOWN AND COUNTRY PLANNING ACTS

Notification of Approval of Permission

Mr C Solesse
Mr P Collins Of Troika Design and Management
Amberley House
New Road
RAINHAM
Essex
RM13 8QN

Application Number: F/2001/3331

Parish:	**CHARVIL**
Location:	**Woodside, Beggars Hill Road, Lands End, Twyford, Reading**
Proposal:	**Proposed erection of new dwelling. Demolition of existing dwelling and outhouses. (Amendment to consent 2000/0465)**

The Wokingham District Council in pursuance of their powers under the above Acts and Regulations hereby **Approve Permission** for carrying out the above development in accordance with the application and the accompanying plans submitted to the Council subject to compliance with the following conditions, the reasons for which are specified hereunder.

Condition
1. The development hereby permitted shall be begun before the expiration of five years from the date of this permission.

Condition
2. Before the building operations hereby permitted are commenced, samples and details of the proposed external materials shall be submitted to and approved in writing by the Local Planning Authority and no external materials shall be used other than those approved.

Condition
3. Notwithstanding the provisions of the Town and Country Planning, (General Permitted Development) Order 1995 (or any Order revoking and re-enacting that Order with or without modification) no additional windows or similar openings shall be constructed in the south elevation of the of the building hereby permitted except for any which may be shown on the approved drawing(s).

Condition
4. The bathroom window in the south elevation of the development hereby permitted shall not at any time be glazed other than with obscured glass.

Condition
5. Works related to the construction of the development hereby granted, including works of demolition or preparation prior to building operations, shall not take place other than between the hours of 8 am and 7 pm Monday to Friday and 8 am to 1.30 pm Saturdays and at no time on Sundays or Bank or National Holidays.

Condition
6. Prior to the commencement of development, details of the slab levels of the proposed buildings shall be submitted to and approved in writing by the Local Planning Authority. The constructed development shall not vary from the approved levels.

Condition
7. Notwithstanding the provisions of the Town and Country Planning (General Permitted Development Order 1995 (or any Order revoking and re-enacting that Order with or without modification) the garage accommodation on the site shall be kept available for the parking of vehicles ancillary to the residential use of the site at all times. It shall not be used for any business nor as habitable space.

Condition
8. Prior to commencing work on site, provision shall be made to accommodate all site operatives, visitors and construction vehicles loading, off-loading, parking and turning within the site during the construction period, in accordance with details to be submitted to and agreed in writing by the Local Planning Authority. The provision should be maintained and used at all times.

Condition
9. No development shall take place until there has been submitted to and approved in writing by the Local Planning Authority a scheme of landscaping, which shall include indications of all existing trees and hedgerows on the land, and details of any to be retained, together with measures for their protection in the course of development; the approved landscaping scheme (with the exception of planting, seeding and turfing) shall be implemented prior to the occupation of any of the building(s) hereby approved and retained.

Condition
10. All planting, seeding or turfing comprised in the approved details of landscaping shall be carried out in the first planting and seeding seasons following the occupation of the buildings or the completion of the development, whichever is the sooner; and any trees or plants which within a period of 5 years from the completion of the landscaping die, are removed or become seriously damaged or diseased shall be replaced in the next planting season with others of similar size and species.

Condition
11. No trees, hedgerows or shrubs within the curtilage of the site, except those shown on the approved plan(s) or otherwise clearly indicated in the approved details as being removed, shall be felled, lopped or pruned, nor shall any roots be removed or pruned without the prior consent of the Local Planning Authority during development and for a period of five years after completion of the development hereby approved. The branch structure and trunks of the trees to be retained and their root systems shall be protected from any damage during site works, in accordance with a scheme to be submitted to and approved in writing by the Local Planning Authority. Any trees, hedgerows or shrubs removed or which die or become dangerous, damaged or diseased before the end of a period of five years after completion of the development hereby approved shall be replaced with new trees, hedging or shrub species (of such size species and in such number and position as maybe agreed in writing), before the end of the first available planting season (1st November to 31st March) following their loss or removal.

Condition
12. No development shall take place until a programme of archaeological work has been implemented in accordance with a written scheme for investigation which has been submitted to and approved in writing by the Local Planning Authority. The development shall only take place in accordance with the detailed scheme approved pursuant to this condition. The archaeological works shall be carried out by a suitably qualified investigating body approved in writing by the Local Planning Authority.

Condition
13. No development shall take place until arrangements have been made for an archaeological "Watching Brief" to monitor development groundworks and to record any archaeological evidence revealed. These arrangements are to be submitted to, and approved in writing by the Local Planning Authority. The development shall only take place in accordance with the "Watching Brief" proposals agreed pursuant to this condition and shall be carried out by a suitably qualified investigating body approved in writing by the Local Planning Authority.

Condition
14. The developer shall afford access at all reasonable times to any archaeologist nominated by the Local Planning Authority, and shall allow him/her to observe the excavations and record items of interest and finds.

Condition
15. No development approved by this permission shall be commenced until a landfill gas risk assessment has been submitted to and approved in writing by the Local Planning Authority. Where a risk from migrating gas is identified, appropriate works to mitigate the effects of gas shall be incorporated in detailed plans to be approved by the Local Planning Authority.

Reason
1. In pursuance of Section 91(1) of the Town and Country Planning Act 1990.

Reason
2. To ensure that the external appearance of the building is satisfactory.

Reason
3. To safeguard the residential amenities of the occupiers of neighbouring properties.

Reason
4. To safeguard the residential amenities of the occupiers of neighbouring properties.

Reason
5. To protect the occupiers of neighbouring properties from noise and disturbance outside the permitted hours during the construction period.

Reason
6. In order to ensure a satisfactory form of development relative to surrounding buildings and landscape.

Reason
7. To ensure that adequate parking space is available on the site, and reduce the likelihood of roadside parking.

Reason
8. To prevent queuing and parking off site, in the interests of highway safety and convenience.

Reason
9. In the interests of visual amenity.

Reason
10. In the interests of visual amenity.

Reason
11. The existing trees/hedgerows/shrubs represent an important public visual amenity in the area.

Reason
12. To allow adequate archaeological investigation before any archaeological remains are disturbed by the approved development.

Reason
13. To ensure that any archaeological evidence discovered during ground works is adequately recorded.

Reason
14. To ensure that any archaeological evidence discovered during ground works is adequately recorded.

Reason
15. To protect people on or close to the site from the risks associated with migrating landfill gas.

Informative

1. The applicant is reminded that under the terms of the Water Resources Act 1991, the prior written consent of the Environment Agency is currently required for any discharge of sewage or trade effluent onto or into ground and for surface runoff into groundwater. Such consent may be withheld. If there is an existing discharge consent the applicant should ensure that any increase in volume is permitted under the present conditions.
Contact Ian Doyle on 01276 454365 for further details.

Informative

2. You are advised, in compliance with The Town and Country Planning (General Development Procedure) (England) (Amendment) Order 2000, that the following policies and/or proposals in the development plan are relevant to this decision:

Berkshire Structure Plan Policies OS1, EN1
Loddon Area Local Plan Policies LC1, LC18
Deposit Draft Wokingham District Local Plan Policies WOS3, WCC2

John Mitchell
Development Control Manager
Date: 09/05/2001

Notice checked by: _____

If this notice grants permission to proceed with the proposal the applicant is reminded that it relates to planning permission only and does not constitute approval under any other legislation including Building Regulations.

3331

Tel. 0118 974 6463 (Direct Line)

Date: 2 May, 2001

My ref. JM/JM/F/2001/3331

Your ref. PC/MSR/TDM.2259

Mr P J Collins
Troika
Amberley House
New Road
Rainham
Essex
RM13 8QN

Environmental Services Department
Planning Services
P.O. Box 157
Shute End, Wokingham
Berkshire RG40 1WR
Tel: (0118) 974 6000
Fax: (0118) 974 6484
Minicom No: (0118) 977 8909
DX: 33506 – Wokingham
E-mail:

Dear Mr Collins,

RE: SOIL CONTAMINATION CONDITION ON F/2001/3331 FOR A REPLACEMENT DWELLING AT WOODSIDE, BEGGARS HILL ROAD, CHARVIL.

Thankyou for your letter which was dated on 18 April 2001.

I have received comments on this matter from the Environmental Health Section, and am now able to relay the following information to you.

The Environment Agency provides all details relating to landfill gas, and this particular condition has been imposed for health and safety of the future occupants of the building. It is, therefore, considered essential that the condition is attached to the application.

I hope this information is of use to you. If you have any further questions relating to this matter the case officer, Joss Miller, can be contacted on the above telephone number.

Yours sincerely

JOHN MITCHELL

Development Control Manager

Joss Miller

From: Suzanne McLaughlin
Sent: 25 April 2001 14:44
To: Joss Miller
Subject: Woodside, Beggars Hill Road, Charvil

Joss
further to our earlier conversation I would like to confirm the following:
1. The condition was recommended by my colleague Joanne Ellis as the whole site falls within 250 metres of a landfill and infact a small part to the south west of the site (incorporating the southern most out building) falls within 50 metres. All our details regarding landfills were provided by the EA.
2. This is the only application for this site which EH have been asked to make comment.
3. The EA are statutory consultees in planning application determination and I suggest you look at the previous application(s) for their comments regarding landfill gas.
4. I confirm that the condition recommended should remain to ensure to protect the health and safety of future occupants of the building.
I hope this is sufficient for your response,
Suzanne

ENVIRONMENT AGENCY

Your Ref: P\MSR\TDM.2259
Our Ref: SP/2001/003223/001
Date: 18th April 2001

PLANNING SERVICES	HPT 4 2459
PCL	TLS
DC JM	ENF
APP	
CS	
23 APR 2001	
COPIES TO:	ACK:
	FILE:

FAO: Joss Miller
District Planning Officer
Wokingham District Council
Council Offices
Shute End
PO BOX 157
Wokingham
Berkshire
RG11 1BN

Dear Sir

RE; Woodside, Beggars Hill Road, Charvil

I am writing with regard to my letter dated 27th March 2001 (enclosed), which I believe you and the applicants agent have both received.

I have received an item of correspondence from the agent (also enclosed), questioning the reasoning for the use of the following planning condition;

"No development approved by this permission shall be commenced until a landfill gas risk assessment has been submitted to and approved in writing by the Local Planning Authority. Where a risk from migrating gas is identified, appropriate works to mitigate the effects of gas shall be incorporated in detailed plans to be approved by the Local Planning Authority"

After liaison with an internal Environmental Planning consultant (Miranda Wycherley), I can confirm that the distance from the boundary of the new dwelling to the nearest boundary for the Tippings Lane Landfill is 90m. This has been corrected to greater accuracy by measuring from the proposed dwelling's wall to the landfill's boundary.

Given this distance and the fact that Tippings Lane Landfill is a "High Risk Landfill Type" I confirm the requirement for either a gas risk assessment (as stated in the original letter) or that the applicant be advised to incorporate gas protection measures into the design of the proposed building. If the applicant does not want to undertake a gas risk assessment then they must instead incorporate gas protection measures into the design of the building.

Suitable techniques are outlined in the Building Research Establishment Report No. 212 "Construction of New Buildings on Gas Contaminated Land". This includes basic measures such as thicker damp course membranes, adequate ventilation in the form of air bricks and sub-floor ventilation. This will ensure that the development and people on the site are protected against adverse effects of gas, which may migrate into the building.

If you have any further queries, please do not hesitate to contact Sarah Paxman or myself on 01276 454341, quoting the reference cited at the beginning of this letter.

Yours Faithfully

M. ROSE.

Matt Rose
Development Planning Team

CC: M.P. Collins, Troika Design & Management, Amberley House, New Road, Rainham, Essex, RM13 8QN

Our ref: SP\2001\003223\001
Your ref: F/2001/3331
Date: 27th March 2001

ENVIRONMENT AGENCY

FAO: Joss Miller
District Planning Officer
Wokingham District Council
Council Offices,
Shute End,
Po Box 157
Wokingham
Berkshire
RG11 1BN

Dear Sir

PROPOSAL: Erection Of A New Dwelling, Demolition Of Existing Dwelling & Outhouse
LOCATION: Woodside, Beggars Hill Road, Lands End, Twyford, Reading

Thank you for your letter dated 15 February 2001, which was received on 19 February 2001. You are asked to quote the following reference in any correspondence: **SU77SE/23/11**. The Environment Agency has the following comments:

Planning Informatives

The following planning informatives should be attached to any planning permission granted:

Under the terms of the Water Resources Act 1991, the prior written consent of the Environment Agency is currently required for any discharge of sewage or trade effluent onto or into ground and for surface runoff into groundwater. Such consent may be withheld. If there is an existing discharge consent the applicant should ensure that any increase in volume is permitted under the present conditions.
Contact Ian Doyle on 01276 454365 for further details.

Advice To Planning Authority

Waste Regulation : Contact Miranda Wycherley On 01276 454384

According to our records, there is one landfill site within 250 metres of the site, as follows:

Grid Reference	Distance From Site	Landfill Name	Details
SU 773 742	60m	Tippings Lane	Household Waste

In view of the proximity of the proposed development to the above landfill sites, it is considered possible that landfill gas may present a risk to this proposal. The Environment Agency would advise that the following condition is imposed;

Cont/d..

Environment Agency
Swift House, Frimley Business Park, Frimley, Camberley, Surrey GU16 7SQ
Telephone : 01276 454300 Fax : 01276 454301

CONDITION: No development approved by this permission shall be commenced until a landfill gas risk assessment has been submitted to and approved in writing by the Local Planning Authority. Where a risk from migrating gas is identified, appropriate works to mitigate the effects of gas shall be incorporated in detailed plans to be approved by the Local Planning Authority.

REASON: To protect people on or close to the site from the risks associated with migrating landfill gas.

Advice To Applicant

Land Drainage: Contact Amnada Reed On 01276 454331

We are not aware of any watercourses on the site, but should there be any, we advise that:
(1) they should not be culverted; and
(2) a buffer zone is left on either side of any watercourse, and
(3) culverted watercourses should not be built over, but should ideally be opened up and made a feature of the site.

In any case, you should note that culverting of a watercourse requires the prior written approval of the local authority under the terms of the Public Health Act 1936, and the prior written consent of the Environment Agency under the terms of the Land Drainage Act 1991/Water Resources Act 1991. The Agency seeks to avoid culverting, and its consent for such works will normally be withheld.

Scientific Support: Contact Ian Doyle On 01276 454365

Surface water from hard standing areas should discharge via deep seal trapped gullies incorporating a minimum water seal of 85mm or similar.

Roof water down-pipes should be connected to the drainage system either directly, or by means of back inlet gullies provided with sealing plates instead of open gratings.

No soakaways shall be constructed to a depth exceeding 3 metres below existing ground level, and under no circumstances shall the water table be intersected.

All sewage or trade effluent should be discharged to the foul sewer if available subject to the approval of Thames Water Utilities or its sewerage agent.

Water Conservation - Household Use
Water is one of our most precious natural resources, and the Environment Agency is keen to ensure it is used wisely:

- Water use for WC flushing can represent 35% of all household use. The applicant should consider installing low (6 litres or less) or dual flush toilets.
- 10% of household water use comes through wash hand basin taps. The installation of water-efficient taps such as spray taps can reduce consumption from this source by up to a half.
- A shower uses less than half the water used for a bath. Power showers on the other hand can use as much water as a bath in just 5 minutes. Shower units using a maximum of 9 litres of water a minute should be fitted.

Cont/d..

Water Conservation - Domestic Appliances
If domestic appliances are to be provided in the new property, the applicant is asked to consider installing water and energy efficient models. Most products such as washing machines and dishwashers are now advertised with energy and water use information.

Water Conservation In Gardens

- As much as 30% of domestic water consumption in the summer can be used on the garden. To encourage sensible use of water in the garden, the Agency recommends installation of the following in all new property(ies):
- a water butt linked to a down-pipe
- provision of a thick layer of good quality top soil
- if the garden is to be planted, use of drought-tolerant turf and plants.
- If a hose-pipe is to be provided in the new property(ies), a trigger nozzle should be fitted to prevent wastage of water.
- Low-water irrigation systems may also be appropriate provided that information on their sensible use is provided to the home-owner.

Water Conservation In Garden And Landscape Maintenance
Maintaining lawns, gardens and other planted areas need not require vast amounts of watering. A few simple measures can be taken to reduce the amount of water required. On this site the Environment Agency would encourage the applicant to consider the following:

- collecting rainwater in water butts connected to down-pipes
- grass should not be mown too often or too short, this only encourages shallow roots, which are more likely to dry out
- use of mulches or ground cover plants to retain soil moisture
- provision of shade for those plants that require more water
- watering, when necessary, in the early morning or evening to reduce evaporation losses.

Grey Water And Rainwater Recycling
Rainwater and grey water recycling is becoming increasingly popular. It can reduce household water use by up to 30%. A number of systems are available which collect, treat and store rain- or grey water for WC flushing or garden/outside watering.

Decision Notice

Would you please forward a copy of the decision notice to this office quoting our reference. A copy of this letter has been sent to the agent. If you have any further queries please do not hesitate to contact Sarah Paxman on 01276 454323, quoting the reference cited at the beginning of this letter.

Yours faithfully

M. ROSE.

Matt Rose
Development Planning Team

CC: M.P. Collins, Troika Design & Management, Amberley House, New Road, Rainham, Essex, RM13 8QN

TROIKA
DESIGN & MANAGEMENT

Ambcrley House New Road Rainham Essex RM13 8QN
Telephone. 01708 630250 Fax: 01708 630214

SU 773 742
776 748
SU77SE/23/11

Our Ref: PC/MSR/TDM.2259

Your Ref: SP/2001/003223/001

18th April 2001

Environment Agency
Swift House
Frimley Business Park
Frimley
Camberley
Surrey GU16 7SQ

For The Attention of N Rose - Development Planning Team

Dear Sir

Re: Woodside, Beggars Hill Road, Charvil

I write with reference to your letter dated 27th March 2001 to Joss Miller of Wokingham District Council. I was somewhat amazed to read your findings as having discussed the matter with my client, he has confirmed that the Tippings Lane landfill site is considerably further than 60 metres from the site, and we feel therefore that the implication of a condition on Planning Approval would not be appropriate, and indeed no condition has never been included on previous Planning Approvals pertaining to this site. I would therefore ask that you re-examine this matter and confirm to Wokingham District Council that no condition regarding gas migration is required in this case.

With the finalisation of this planning application due imminently, your earliest attention would be much appreciated.

Yours faithfully
Troika Design & Management

P J Collins

cc: C Sollesse Esq
Joss Miller – Wokingham District Council (fax)

TROIKA
DESIGN & MANAGEMENT

Amberley House New Road Rainham Essex RM13 8QN
Telephone: 01708 630250 Fax: 01708 630214

Our Ref: PC/MSR/TDM.2259

24th April 2001

M Thorpe Esq
Wokingham District Council
PO Box 157
Shute End
Wokingham
RG40 1WR

JM

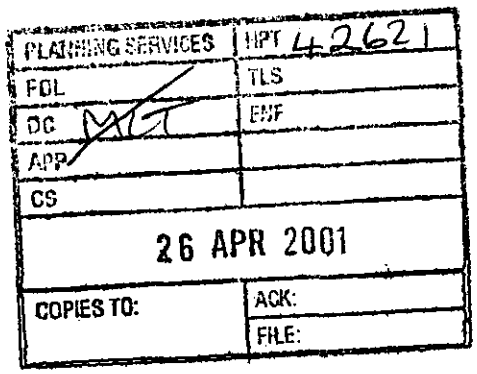

Dear Mr Thorpe

Re: Woodside, Beggars Hill Road, Charvil

Further to our telephone conversation today please find enclosed two copies of our drawing no. TDM.2259/101 Revision E, which indicates the new house slab level compared to a datum taken from the original house DPC level with a notional value of 100.000. The plan also indicates planting along the front boundary of the site which has been revised in accordance with my clients conversation with Catherine Bramble of your landscaping department, which we have been told will be now be acceptable.

As you maybe aware, we have been trying for a good many weeks now to have the conditions relating to this planning application agreed, and we have now come to the point where this has caused significant problems with progressing the works approved. I would therefore be grateful if you would contact me as a matter of urgency on my office telephone shown at the top of this page, or on mobile telephone number 07968 123483, to either confirm your approval of the details, or what if any further information you require.

Yours faithfully
Troika Design & Management

P J Collins

cc: C Sollesse Esq

Revised

DEVELOPMENT CONTROL/BUILDING CONTROL CHECKLIST

CHECKLIST WHEN A BUILDING REGULATION APPLICATION HAS BEEN RECEIVED.

SITE DETAILS		CASE OFFICER
PLANNING APPLICATION NUMBER	3331	JM
BUILDING CONTROL NUMBER.	F/2001/1457	
APPLICANT/AGENT	Tolka Design + Management	
ADDRESS OF SITE	Woodside. Beggars Hill Road CHARVIL	
DESCRIPTION OF PROPOSED WORK	replacement dwelling demolition of existing dwelling and outhouses (amendment to consent F/2000/0465)	

DRAWING NUMBERS	BC	DC
BLOCK PLAN	TDM/2259/20 C	TDM/2259/20 C
ELEVATIONS	TDM/2259/106	TDM/2259/50.
FLOOR PLANS	TDM/2259/102A	— " —
	garage TDM/2259/107	— " —

CHECKLIST	1ST CHECK	2ND CHECK
PERMITTED DEVELOPMENT		
APPLIC.NECESSARY-NOT RECEIVED		
APPLIC.RECEIVED & APPROVED	9/5/01	
APPLIC.RECEIVED-NO DECISION		
APPLIC.REFUSED		
DIFFERENCES BETWEEN DC/BC DRAWINGS	None	
IF YES, WHAT ARE THE DIFFERENCES ? Condition 15 re landfill gas risk assessment	✓	
DATE	27/9/01	

PROBLEMS	REQUESTED	RECEIVED	REMINDER
PLANNING PERMISSION NEEDED			
REVISED PLANS NEEDED			
PLANNING APPLIC.REFUSED			
WAIT FOR PLANNING DECISION			

COMMENCED ON SITE	
NO PLANNING DECISION	
NO PLANNING APPLICATION	

WORK SHEET FOR : Joss Miller

Application Number : F/2001/3331

Applicant : Mr C Solesse Mr P Collins Of Troika Design And Management.

Location : Woodside, Beggars Hill Road, Lands End, Twyford, Reading.

Proposal : Proposed erection of new dwelling. Demolition of existing dwelling and outhouses. (Amendment to consent 2000/0465)

Site Notice Displayed ? :

YES	NO	DATE
✓		

Date of Neighbour Notifications : 15/2

Date of Site Visit : 5/3

Date Registered : 08/02/2001

Earliest Date for Decision : 11/03/2001

Latest Consultation Date/Site Notice Expiry Date : 11/03/2001

This application will have expired on: 05/04/2001. You need to make a decision 1 day prior to this date for this application to count as determined in less than 8 weeks.

Consultation Responses :

Env. Health - conditions
Landscape - conditions
Highways - conditions

Planning Issues :

Effect on street scene & neighbouring properties DBE1.
Rural Area

Application Number: F/2001/3331

Appraisal :

This application is for a replacement dwelling & outbuildings (amended f/2000/0465)
Neighbours
The proposed dwelling is situated 16m from the neighbouring property. The first floor bathroom window would require obscure glazing. The ground floor windows on this side would be partially obscured from the neighbours as there is a 2m hedge on the boundary and the proposed dwelling is set back some 12m from that of the existing one. All other neighbours are a sufficient distance for any impact to be minimised.
Street scene
The surrounding homes consist of semi-d and chalet bungalows. The proposal is for a large detached house 7.5m in height, approx 0.5 higher than the original house. It is set back from the road and, therefore, any impact on the street scene will be minimised.
Countryside & Green Gap.
The proposed dwelling proposes a cumulative increase of approx 215% to the original dwelling. In such a sensitive area this amount of development is not encouraged. However, an appeal for a similar application has recently been allowed by the Inspectorate and, under these circumstances the minor increase (boiler house) would not be a significant change to f/2000/0465 to warrant a refusal.

Recomendation : Approval: ☑ **Refusal:** ☐
(tick appropriate box)
The new garage would be sited in a similar position to the demolished sheds already existing. They are within the residential curtilage of the dwelling & are not considered detrimental to the character of the area, street scene or neighbouring properties.

Application Number F/2001/3331
Conditions/Reasons for Refusal

No	Std Con	Std Reas	Non Std Conditions / Reasons for Refusal
1.	C001	R001	
2	C012	R012	
3	C044	R044	south elevation
4	C045	R045	bathroom south elevation
			(omit 'fixed shut')
5.	C070	R070	
6	C100	R100	
7	C049	R049	
8	C129	R129	
9	C150	R150	
10	C151	R151	
11.	C153	R153	
12	C182	R182	
13	C183	R183	
[illegible]	[illegible]	[illegible]	

15 CONDITION: No development approved by this permission shall be commenced until a landfill gas risk assessment has been submitted to and approved in writing by the Local Planning Authority. Where a risk from migrating gas is identified, appropriate works to mitigate the effects of gas shall be incorporated in detailed plans to be approved by the Local Planning Authority.

REASON: To protect people on or close to the site from the risks associated with migrating landfill gas.

Inf. The applicant is reminded that

Under the terms of the Water Resources Act 1991, the prior written consent of the Environment Agency is currently required for any discharge of sewage or trade effluent onto or into ground and for surface runoff into groundwater. Such consent may be withheld. If there is an existing discharge consent the applicant should ensure that any increase in volume is permitted under the present conditions.
Contact Ian Doyle on 01276 454365 for further details.

SOUTH-EAST AREA LOCAL PLAN POLICIES:	
WOKINGHAM DISTRICT LOCAL PLAN POLICIES:	DOS3, DCC2
GREEN BELT LOCAL PLAN POLICIES:	
BERKSHIRE STRUCTURE PLAN POLICIES:	OS1, ENI.
MINERALS LOCAL PLAN POLICIES:	

RECOMMENDATION AND CONDITIONS/REASONS AGREED: [signature]
(Development Control Manager)

Date:

[signature] 23/x

RECORD OF SITE VISIT

SITE ADDRESS: Woodside Beggars Hill Road Lands End, Twyford Reading.

APPLICATION NUMBER: F/2001/3331

OFFICER: Joss Miller

DATE OF SITE VISIT: 8/3

1 SITE/STATUTORY NOTICE DISPLAYED ? On tree on front boundary

2. DESCRIPTION OF SURROUNDINGS
Detached and semi-detached chalet bungalows & houses.

3. DESCRIPTION OF SITE/BUILDING
Chalet bungalow - extended
Brick & tile

4. RELATIONSHIP TO ADJOINING PROPERTIES
fields on one side
Ramblers - semi-d house - primary first floor window & ground floor windows on applicant's side.

5. SITE CONSTRAINTS

TREES

ACCESS/PARKING Driveway, outbuildings & stables to rear.

LEVELS

BOUNDARY TREATMENT Shrubbery at side of Ramblers - open at rear & side.

OTHERS

Our ref: SP\2001\003223\001
Your ref: F/2001/3331
Date: 27th March 2001

ENVIRONMENT AGENCY

FAO: Joss Miller
District Planning Officer
Wokingham District Council
Council Offices,
Shute End,
Po Box 157
Wokingham
Berkshire
RG11 1BN

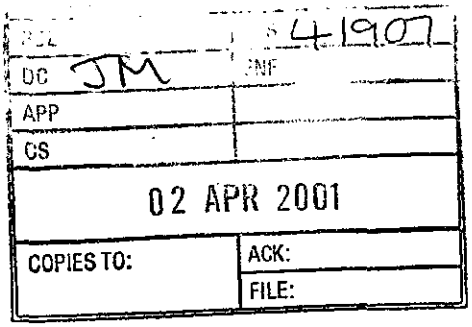

Dear Sir

PROPOSAL: Erection Of A New Dwelling, Demolition Of Existing Dwelling & Outhouse
LOCATION: Woodside, Beggars Hill Road, Lands End, Twyford, Reading

Thank you for your letter dated 15 February 2001, which was received on 19 February 2001. You are asked to quote the following reference in any correspondence: **SU77SE/23/11**.The Environment Agency has the following comments:

Planning Informatives

The following planning informatives should be attached to any planning permission granted:

Under the terms of the Water Resources Act 1991, the prior written consent of the . Environment Agency is currently required for any discharge of sewage or trade effluent onto or into ground and for surface runoff into groundwater. Such consent may be withheld. If there is an existing discharge consent the applicant should ensure that any increase in volume is permitted under the present conditions.
Contact Ian Doyle on 01276 454365 for further details.

Advice To Planning Authority

Waste Regulation : Contact Miranda Wycherley On 01276 454384

According to our records, there is one landfill site within 250 metres of the site, as follows:

Grid Reference	Distance From Site	Landfill Name	Details
SU 773 742	60m	Tippings Lane	Household Waste

In view of the proximity of the proposed development to the above landfill sites, it is considered possible that landfill gas may present a risk to this proposal. The Environment Agency would advise that the following condition is imposed;

Cont/d..

Environment Agency
Swift House, Frimley Business Park, Frimley, Camberley, Surrey GU16 7SQ
Telephone : 01276 454300 Fax : 01276 454301

CONDITION: No development approved by this permission shall be commenced until a landfill gas risk assessment has been submitted to and approved in writing by the Local Planning Authority. Where a risk from migrating gas is identified, appropriate works to mitigate the effects of gas shall be incorporated in detailed plans to be approved by the Local Planning Authority.

REASON: To protect people on or close to the site from the risks associated with migrating landfill gas.

Advice To Applicant

Land Drainage: Contact Amnada Reed On 01276 454331

We are not aware of any watercourses on the site, but should there be any, we advise that:
(1) they should not be culverted; and
(2) a buffer zone is left on either side of any watercourse, and
(3) culverted watercourses should not be built over, but should ideally be opened up and made a feature of the site.

In any case, you should note that culverting of a watercourse requires the prior written approval of the local authority under the terms of the Public Health Act 1936, and the prior written consent of the Environment Agency under the terms of the Land Drainage Act 1991/Water Resources Act 1991. The Agency seeks to avoid culverting, and its consent for such works will normally be withheld.

Scientific Support: Contact Ian Doyle On 01276 454365

Surface water from hard standing areas should discharge via deep seal trapped gullies incorporating a minimum water seal of 85mm or similar.

Roof water down-pipes should be connected to the drainage system either directly, or by means of back inlet gullies provided with sealing plates instead of open gratings.

No soakaways shall be constructed to a depth exceeding 3 metres below existing ground level, and under no circumstances shall the water table be intersected.

All sewage or trade effluent should be discharged to the foul sewer if available subject to the approval of Thames Water Utilities or its sewerage agent.

Water Conservation - Household Use
Water is one of our most precious natural resources, and the Environment Agency is keen to ensure it is used wisely:

- Water use for WC flushing can represent 35% of all household use. The applicant should consider installing low (6 litres or less) or dual flush toilets.
- 10% of household water use comes through wash hand basin taps. The installation of water-efficient taps such as spray taps can reduce consumption from this source by up to a half.
- A shower uses less than half the water used for a bath. Power showers on the other hand can use as much water as a bath in just 5 minutes. Shower units using a maximum of 9 litres of water a minute should be fitted.

Cont/d..

Water Conservation - Domestic Appliances
If domestic appliances are to be provided in the new property, the applicant is asked to consider installing water and energy efficient models. Most products such as washing machines and dishwashers are now advertised with energy and water use information.

Water Conservation In Gardens

- As much as 30% of domestic water consumption in the summer can be used on the garden. To encourage sensible use of water in the garden, the Agency recommends installation of the following in all new property(ies):
- a water butt linked to a down-pipe
- provision of a thick layer of good quality top soil
- if the garden is to be planted, use of drought-tolerant turf and plants.
- If a hose-pipe is to be provided in the new property(ies), a trigger nozzle should be fitted to prevent wastage of water.
- Low-water irrigation systems may also be appropriate provided that information on their sensible use is provided to the home-owner.

Water Conservation In Garden And Landscape Maintenance
Maintaining lawns, gardens and other planted areas need not require vast amounts of watering. A few simple measures can be taken to reduce the amount of water required. On this site the Environment Agency would encourage the applicant to consider the following:

- collecting rainwater in water butts connected to down-pipes
- grass should not be mown too often or too short, this only encourages shallow roots, which are more likely to dry out
- use of mulches or ground cover plants to retain soil moisture
- provision of shade for those plants that require more water
- watering, when necessary, in the early morning or evening to reduce evaporation losses.

Grey Water And Rainwater Recycling
Rainwater and grey water recycling is becoming increasingly popular. It can reduce household water use by up to 30%. A number of systems are available which collect, treat and store rain- or grey water for WC flushing or garden/outside watering.

Decision Notice

Would you please forward a copy of the decision notice to this office quoting our reference. A copy of this letter has been sent to the agent. If you have any further queries please do not hesitate to contact Sarah Paxman on 01276 454323, quoting the reference cited at the beginning of this letter.

Yours faithfully

M. Rose.

Matt Rose
Development Planning Team

CC: M.P. Collins, Troika Design & Management, Amberley House, New Road, Rainham, Essex, RM13 8QN

TO: **DEVELOPMENT CONTROL**
Joss Miller

FROM: Environmental Design

DATE: 2 April 2001

Location:	Woodside, Beggars Hill Road, Lands End, Charvil, Reading
Proposal:	Proposed demolition of existing dwelling and outbuildings. Erection of replacement dwelling and garage block.
Application Number:	F/2001/0465

In response to your consultation dated 20 March 2001 for the above application, the landscape comments are as follows:

1. Prunus lusitanica hedging is shown to be planted on the road side of the new boundary wall. As the site is situated in a semi-rural location it would be preferable for all new planting along the site boundaries to be of native species.
2. There is a note on the drawing stating that the existing vegetation is to be retained on the southern boundary and protected by chestnut pale fencing, which is acceptable. However another note states that the existing hedgerow along this boundary is to be removed and replanted with Prunus lusitanica. This needs to be clarified by the applicant. If a proportion of the hedgerow is to be removed, the section needs to be identified on the drawing. Replanting should include a proportion of native species.
3. An indication of the proposed planting within the front garden is shown on the drawing, however further details are required. The applicant needs to provide information on the full species name of plants, size of plant at time of planting and revised planting densities. (2m centres are not sufficient for an amenity planting scheme.) The applicant should also consider planting several trees to compensate for the loss of part of the existing mature hedgerow in order to provide a new access into the site.

Catherine Brimble

Catherine Brimble
Landscape Architect

WOKINGHAM DISTRICT COUNCIL

PLANNING SERVICES UNIT
DC | TLS
DC | ENF
CS
21 FEB 2001
COPIES TO: | ACK:
FILE:

MEMORANDUM

From: Joanne Ellis, Environmental Health My Ref: JPE/woodside

To: Joss Miller, Development Control Your Ref: F/2001/3331

Date: 20 February 2001

PROPOSED ERECTION OF NEW DWELLING. DEMOLITION OF EXISTING DWELLING AND OUTHOUSES
LOCATION: WOODSIDE, BEGGARS HILL ROAD, LANDS END, TWYFORD

These proposals have been evaluated and I have the following comments:

The site is within 250 metres of a landfill site and hence a detailed risk assessment needs to be carried out to determine the likely impact of landfill gas on the property. Then gas protection measures should be agreed and implemented prior to occupation of the building. If not properly monitored and controlled landfill gas can give rise to flammability, toxicity and asphyxiation hazards. Therefore, adequate gas protection measures must be installed prior to occupation of the building to protect the health and safety of any future occupants.

I recommend that the following condition be imposed should the application be granted planning consent:

1. Before the development is commenced a detailed investigation shall be carried out to determine the present and likely future impact of landfill gas on the site. The method and extent of this investigation shall be agreed with the Planning Authority prior to the commencement of work. Details of appropriate measures to control ingress of landfill gas to inhabited spaces and outdoor areas, including provision for monitoring, shall be submitted to and approved in writing by the Planning Authority, before the development commences. The development shall then proceed in strict accordance with the measures approved.
   Reason - To protect the safety of proposed occupants of the application site from landfill gas.

2. Works related to the construction of the development hereby granted, including works of demolition or preparation prior to building operations, shall not take place other than between the hours of 8am and 7pm Monday to Friday and 8am to 1.30pm Saturdays and at no time on Sundays, Bank or National Holidays.
   Reason - To protect the occupiers of neighbouring properties from noise and disturbance outside the permitted hours during the construction period.

Please forward these comments to the applicants for their information and should you or the applicant have any queries regarding these points please do not hesitate to contact me to discuss them.

TO: **DEVELOPMENT CONTROL**
Joss Miller

FROM: Environmental Design

DATE: 27 February 2001

Location:	Woodside, Beggars Hill Road, Lands End, Charvil, Reading
Proposal:	Proposed erection of new dwelling. Demolition of existing dwelling and outhouses. (Amendment to consent 2000/0465).
Application Number:	F/2001/3331

In response to your consultation dated 15 February 2001 for the above application, the landscape comments are as follows:

I have no objection to the proposals. An existing native hedgerow forms the eastern boundary of the site adjacent to Beggars Hill Road and although it mostly contains dead elm, a new access is shown which will mean the removal of some of the hedgerow. It is suggested that the applicant put in additional planting to form a hedgerow where the existing site access is closed off. Details of proposed species to be planted will need to be submitted.

Catherine Brimble

Catherine Brimble
Landscape Architect

HIGHWAYS CONSULTATION SHEET

From: Joss Miller **Date:** 15 February 2001

Application Number: F/2001/3331

Proposal: Proposed erection of new dwelling. Demolition of existing dwelling and outhouses. (Amendment to consent 2000/0465)

Parish: CHARVIL PARISH

Site Address:
Woodside, Beggars Hill Road, Lands End, Twyford, Reading.

Applicant:
Mr C Solesse Mr P Collins Of Troika Design And Management.

Your observations are required in respect of this application within **7 days** of the above date.

✓ below as applicable;

1) ☐ Recommend refusal for the reason(s) **stated below**;
2) ☑ Recommend approval but with condition(s) & reason(s) **stated below**;
3) ☐ Recommend approval with **no** condition(s) or reason(s).

Comments as per application 0465 dated 21/2/00

Signed: _____ **Print name:** Adam Coggins 19/02/01

Received by Wokingham District Council

Application No: F/2001/3331

Proposal:
Proposed erection of new dwelling. Demolition of existing dwelling and outhouses. (Amendment to consent 2000/0465)

Location:
Woodside, Beggars Hill Road, Lands End, Twyford, Reading.

The application is available for inspection at Wokingham District Council's offices during the following times:

PLANNING DEPARTMENT, SHUTE END, WOKINGHAM TEL (0118) 974 6428
8.30 - 5.00 Monday - Thursday & 8.30 - 4.00 Friday

WOODLEY LIBRARY HEADLEY ROAD WOODLEY (9.30am - 7.00pm Mon, Thurs & Fri. 9.30am - 5.00pm Tues, 9.30am - 1.00pm Saturday. closed all day Wednesday). If you intend to view this application at Woodley Library (see details above) please allow 4 days from the date of this notice for delivery of plans.

***Comments should be sent in writing QUOTING THE APPLICATION NUMBER* to the Case Officer Joss Miller P.O. Box 157 Council Offices, Shute End, Wokingham Berkshire, RG40 1WR to arrive on or before 11/03/2001. Written comments submitted will become available for public inspection.**

In view of the very large number of planning applications and letters of comment received, it will not normally be possible for an individual reply to observations made. However any comments will be taken into account when the application is determined and you will be notified of the decision.

Head Planning and Transportation

15 February 2001

(*) PRE-APP (*)
ATTACHED

WOKINGHAM D.C. DEVELOPMENT CONTROL

Valid

Start date: ~~31 JAN 2001~~ 08 FEB 2001	Map No. 37 Site 127
Officer: JM	Application No. F/2001/3331
	Easting: ..... Flood Pln .....
	Northing: ..... Mineral .....

Level: ☐ Sub Committee ☑ Delegated ☐ Sec. State
☐ Incorrect Fee ☐ Invalid ☐ PD

Description: ERECTION OF NEW DWELLING. DEMOLITION (F) PROPOSED ~~SINGLE STOREY SIDE EXTENSION~~ DEMOLITION OF EXISTING DWELLING + OUTHOUSES ~~TO DWELLING TO HOUSE BOILER~~
(AMENDMENT TO CONSENT 2000/0465)

Location: WOODSIDE BEGGARS HILL ROAD

Parish: CHARVIL Ward: Charvil
15.2.01 TB.

Applicant: MR C SOLESSE
fee paid on 2000/0465

Fee Received 00-00 Required ..... Additional ..... Refund .....

Enforcement Section to be notified ☐ tick if required

Additional information required for validation

		Reason	Requested	Received
1	1:2500 OS location plan showing property edged in blue/red	Scale location plan 1:2500?	6/2	08 FEB 2001
2	1:500 block plan showing existing & proposed dev. + adj. Properties			
3	Forms unsigned			
4	Correct S 66 certificate		phoned 6/2	
5	Elevation plans	Rear elev. shows boiler room door not extending to ground level - is this correct?		08 FEB 2001
6	Floor plans	mark rest of porch on floor plan - goes over	plan to follow	
7	Metric scale disclaimer	utility room door		
8	Encroachment letter			
9	Miscellaneous			

APPLN NO. _____

ACTION REQUIRED BY DEVELOPMENT CONTROL

Conservation Area .....

Listed Building 1 2 2*

Advertisement Required .....

Date Site Notice Sent : 15.2.01 B. Parish Council Informed - YES / NO

INTERNAL CONSULTATIONS

Building Control .....
Landscape ✓
Trees .....
Conservation Officer .....
Environmental Health Landfill cons. ✓
Housing .....
Leisure & Cultural services .....
Public Rights of Way .....
Property .....
District Secretary (only if called in by SOS) .....
Policy & Plans .....
Strategic Planning (JSPU) .....
Minerals (INTERNAL) .....
Archaeological Site (BABTIE) ✓
Education .....
Social Services .....
Highways ✓

EXTERNAL CONSULTATIONS

Adjacent D P A : .....
Adjacent Parish : .....
Southern Electricity Board .....
British Gas .....
PSA Oil Pipeline .....
Transco : .....
Environment Agency Landfill cons. ✓

Rail Track .....
Police Arch. Liaison Officer .....

HERITAGE BODIES

The Georgian Group .....
Ancient Monuments Society .....
Council for British Arch. .....
RCHME .....
Telecommunications (NRPB) : .....
Sport England : .....

OTHERS: (Rural Area)

Pre-app attached (dated 24/1/00)

NEIGHBOURS:

S/N see below :- ✓

as for F/2000/0465

+ J. Hamblin, 53 Selsdon Ave, Woodley
Mr & Mrs A Jerome, Malmo, Waingels Rd, Charvil
A & D Spicer, Paradise, Beggars Hill Rd, Lands End, Twyford
B Tyler, Woodpeckers, Waingels Road, Charvil
C. W. Bushnell, The Ramblers, Beggars Hill Rd, Lands End, Twyford
+ Ashley View, Hill Ray House } Waingels Road, Charvil
Floreat, Inglebrook, Inglewood } Beggars Hill Rd, Charvil

08.FEB.2001 * 3331

TROIKA
DESIGN & MANAGEMENT

Amberley House New Road Rainham Essex RM13 8QN
Telephone: 01708 630250 Fax: 01708 630214

Our Ref: PC/MSR/TDM.2259

30th January 2001

Wokingham District Council
Environmental Services Department
Planning Services
PO Box 157 Shute End
Wokingham
Berkshire RG40 1WR

Dear Sirs

Re: Woodside, Beggars Hill Road, Charvil

I refer to your letter dated 12th January 2001 and my client Mr Sollesse's subsequent conversation with your office regarding the addition of a side extension to house an oil fired boiler on the above dwelling, which was approved at appeal (planning no. F2000/0465).

My understanding is that whilst it is felt that the addition of the boiler house is considered to be materially different than the planning approved, should the house be completed without the boiler house this could in fact be constructed as permitted development afterwards and would not require the benefit of planning approval.

Obviously from a more practical point of view it would be advantageous to construct the boiler house as part of the main dwelling and I therefore enclose a planning application for this alteration consisting of six copies of your completed application form together with six copies of our drawing no's. 2259/50 and 2259/20 in order to put the necessary paper work in place to allow the construction to be carried out concurrently.

Finally it was explained to Mr Sollesse that the enclosed application could be submitted without a fee as we are simply looking to amend the existing application. However, if there is a problem in registering or processing this application perhaps you would telephone me.

Yours faithfully
Troika Design & Management

P J Collins
cc: Mr C Sollesse

08.FEB.2001 * 3331

TROIKA
DESIGN & MANAGEMENT

Amberley House New Road Rainham Essex RM13 8QN
Telephone: 01708 630250 Fax: 01708 630214

Our Ref: PC/MSR/TDM.2259

7th February 2001

Sent by Facsimile no. 0118 974 6484

Mrs Hurst
Wokingham District Council
PO Box 157
Shute End
Wokingham
Berkshire RG40 1WR

Dear Madam

Re: Woodside, Beggars Hill Road, Charvil

Further to our telephone conversation yesterday please find attached an A4 extract of our drawing no. TDM.2259/50 revision A, incorporating the opposite wall of the porch which adjoins the boiler house.

Please let me know if you require any additional information.

Yours faithfully
Troika Design & Management

P J Collins

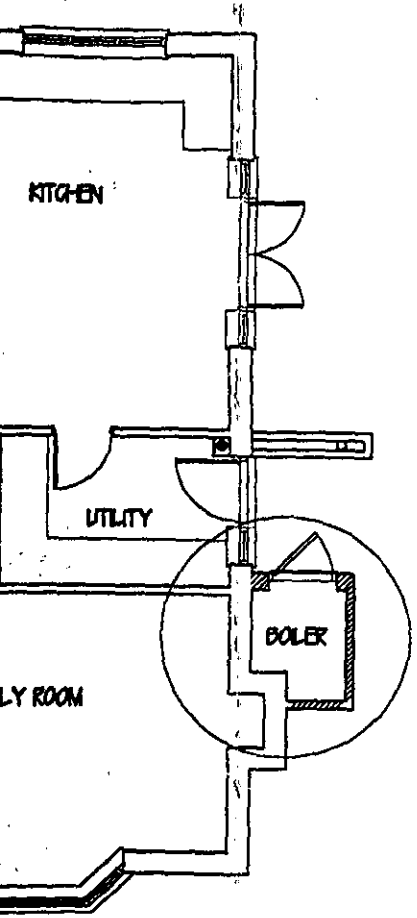

-AN
-ANS

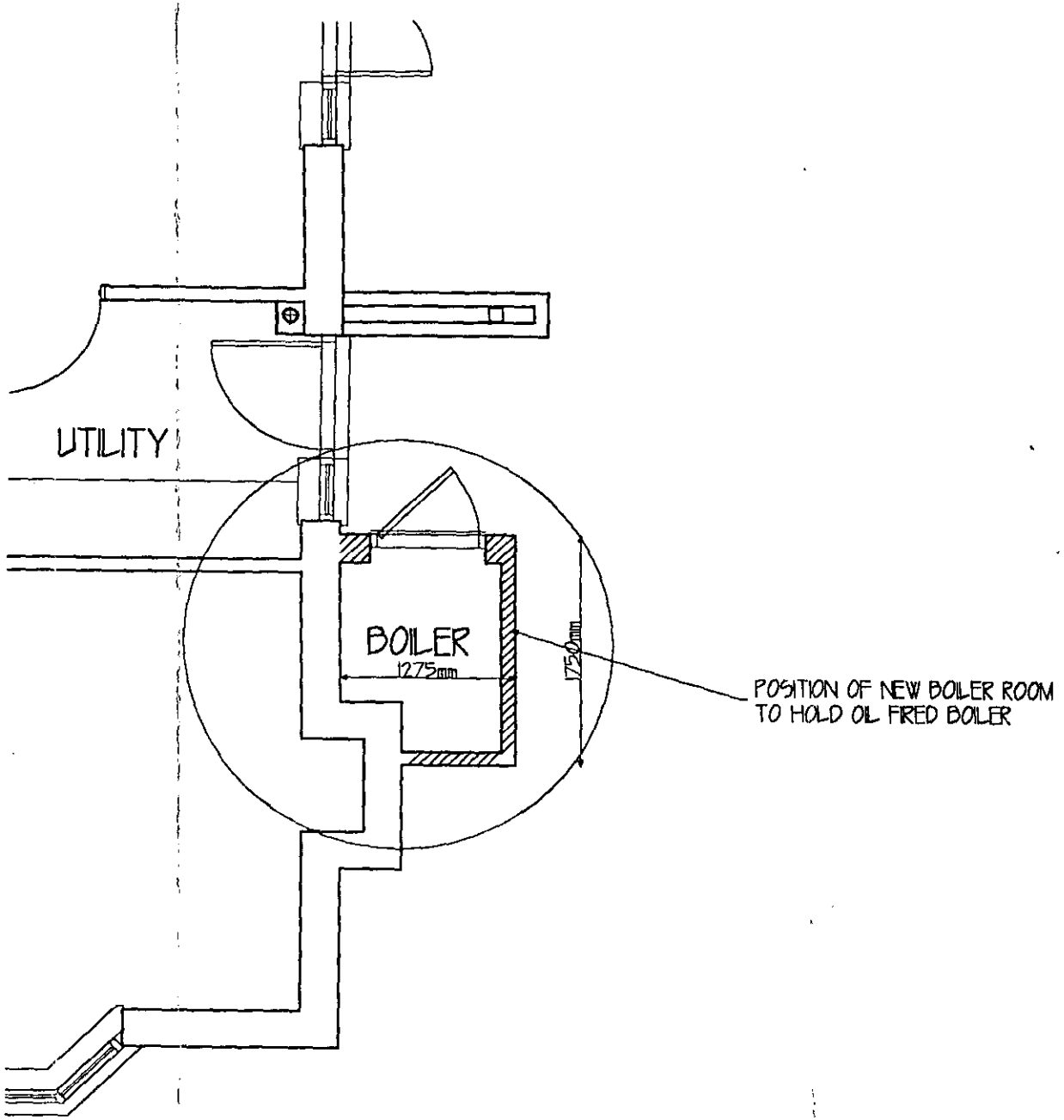

ENLARGED BOILER ROOM PLAN

(1) WOODSIDE; 05 010 007 Revision - Charvil - New Parish 1/4/7

ADDRESS BEGGARS HILL ROAD PARISH CHARVIL ~~WOODLEY~~

PLOT No. ORD. SHEET No. SU. 7774 37

BUILDER

Plan No.	Applicant	Description of Development	Date of Decision	Decision
471/52	Mr. W. J. Hathorn	New Dairy	9. 9. 52	App. N/A
7/55	Mr. W. J. Hathorn	Detached House	8. 2. 55	App. App
R/272/63	"	Front Porch	28. 11. 63	App. App
1335/71	Mrs. K. M. Hathorn	outline - 4 dwellings on land at Woodside - Northside	30. 12. 71	N/A Refu
1100/73	Mr E. V. Smith	dem ex bldgs & bungalow erect new bungalow & garage house	30. 8. 73	— Refuse
1132/73	"	outline - 1 Bungalow	30. 8. 73	N/A Refuse
1148/73	"	Temp workers accom no & 16,000 sq ft glass house	30. 8. 73	— Refu
Letter 23.8.73 Mr E V Smith to withdraw application for determination			—	—
—	—	modernise to rehabilitate exist dwelling	—	—
1549/73	Mr E V Smith	outline - 10000 sq ft glass & boiler house	25. 10. 73	N/A C/A

DATE OF COMPLETION November 1955

MINISTRY DECISION

SPECIAL ORDERS

DRAINAGE

(2) WOODSIDE

ADDRESS BEGGARS HILL ROAD PARISH CHARVIL E

PLOT No. ORD. SHEET No. 7774 (37)

BUILDER

Plan No.	Applicant	Description of Development	Date of Decision	Decision
1599/73	Mr E. V. Smith	erection of two stables	25. 10. 73	— C/A
12176	MR & MRS A. McKARLANE	ALTERATIONS & ADDITIONS	13. 12. 79	N/A C/A
BR12538	"	2/STORY EXTENSION		
BR 20700	Mr. R. TAYLOR.	2/Storey Extension	6. 6. 83	App. N/
19101	"	"	15. 4. 83	N/A C/A
99/69170/F	MR C. SOLLESSE.	Replacement dwell + garage	8/4/99.	RE
99/69557/F	W/DR			
99/70482/F				
F/2000/0465	MR. C. SOLESSE	Dem. existing dwelling, replacement dwelling & garage block	23/05/00	RE

DATE OF COMPLETION

MINISTRY DECISION Appeal Allowed 30.10.00 (F/2000/0465)

SPECIAL ORDERS

DRAINAGE

Environmental Services

For office use only.
Application number: 08.FEB.2001 * 3331

Householder planning application form

Please answer all questions in CAPITAL letters.
If any question does not apply to you, put N/A in the space.
Please send six copies of the filled in form and your plans to the address on the front of the folder.
We provide guidance notes to help you fill in the form. If you have any questions, please call Planning Support on 0118 974 6428 or 0118 974 6429.

1	Your name Address and postcode Phone number	M. C. SALLESS ESQ. C/O AGENT
2	Agent's Name Address and postcode Phone number	M. P. COLLINS TROIKA DESIGN & MANAGEMENT AMBERLEY HOUSE, NEW ROAD RAINHAM ESSEX RM13 8QN 01708 630250
3	Site We need you to send in six copies of the 1:2500 scale location plan and six copies of the 1:500 scale block plan, with the site outlined in red. You can buy these maps from the Environmental Services reception or order them by phoning 0118 974 6485.	WOODSIDE, BEGGARS HILL ROAD CHARVIL WOKINGHAM.
4	Give brief details of the proposal for example, two storey side extension. About the application	SINGLE STOREY BOILER HOUSE EXTENSION ON A NEWLY APPROVED DWELLING
5	Are there any trees on the site? If Yes, please show their positions, spread and species of the trees on the plans. Say which trees you plan to cut down.	Yes ☐ No ☑
6	Please list the external materials you will use for example, red brick to match any existing bricks and dark stained timber.	BRICKS & TILES TO MATCH MAIN HOUSE
7	Will the proposal change the pedestrian or vehicle access to the site? Please show details of the existing access and any proposed changes on the plans.	Yes ☐ No ☑
8	Will the car parking provision at the site be changed? If Yes, please show details of any changes on the plans.	Yes ☐ No ☑

Crystal Mark
Clarity approved by Plain English Campaign

Please turn over

9	How many bedrooms does the property have?	Existing: 4	Proposed: 4
10	Does a public right of way touch the site? If yes, please show the route and any proposed alternative on the plans.	Yes ☐	No ☑
11	Checklist. Please make sure that you enclose the following.		
	a Six copies of this form signed and dated.		
	b The fee (We have attached a current scale of fees). If you do not have to pay a fee, please say why below.		
	EXPLAINED IN COVERING LETTER		
	c Six copies of each set of plans and drawings listed below.		
	• 1:2500 scale location plan with the site outlined in red.		
	• 1:500 scale site layout plan.		
	• 1:100 or 1:200 scale floor plans and elevations.		

12 Certificate of ownership (Section 66 Town & Country Planning Act 1990)
Please delete either certificate A or certificate B. If neither apply, you must fill in a full certificate which you can get from Environmental Services.

(Owner means a person with a freehold interest, or someone who is a leasehold tenant with at least seven years left on their agreement)

Certificate A

I certify that

- At the beginning of the period of 21 days ending with the date of the application nobody, except the applicant, owned any part of the land which the application relates to.
- None of the land forms part of an agricultural holding.

Certificate B

I certify that

- I or the applicant has given the necessary notice to everyone else who (at the beginning of the period of 21 days ending with the date of the application) owned any part of the land which the application relates to as listed below.

Owner's name	Address at which the notice was served	Date on which the notice was served

~~None of the land forms part of an agricultural holding.~~

Your signature: [signature] on behalf of M. C. SOLLESSE.

Date 30-1-01

Please tick this box if you or your husband, wife or partner are employed by Wokingham District Council ☐

08.FEB.2001 * 5331

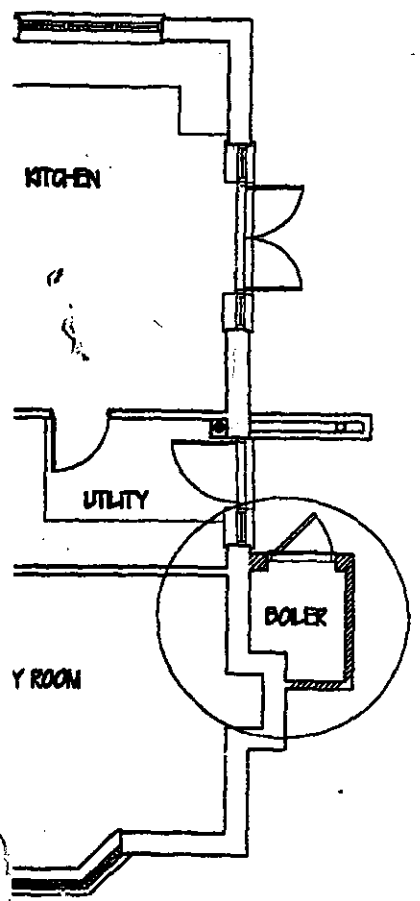

AN

ANS

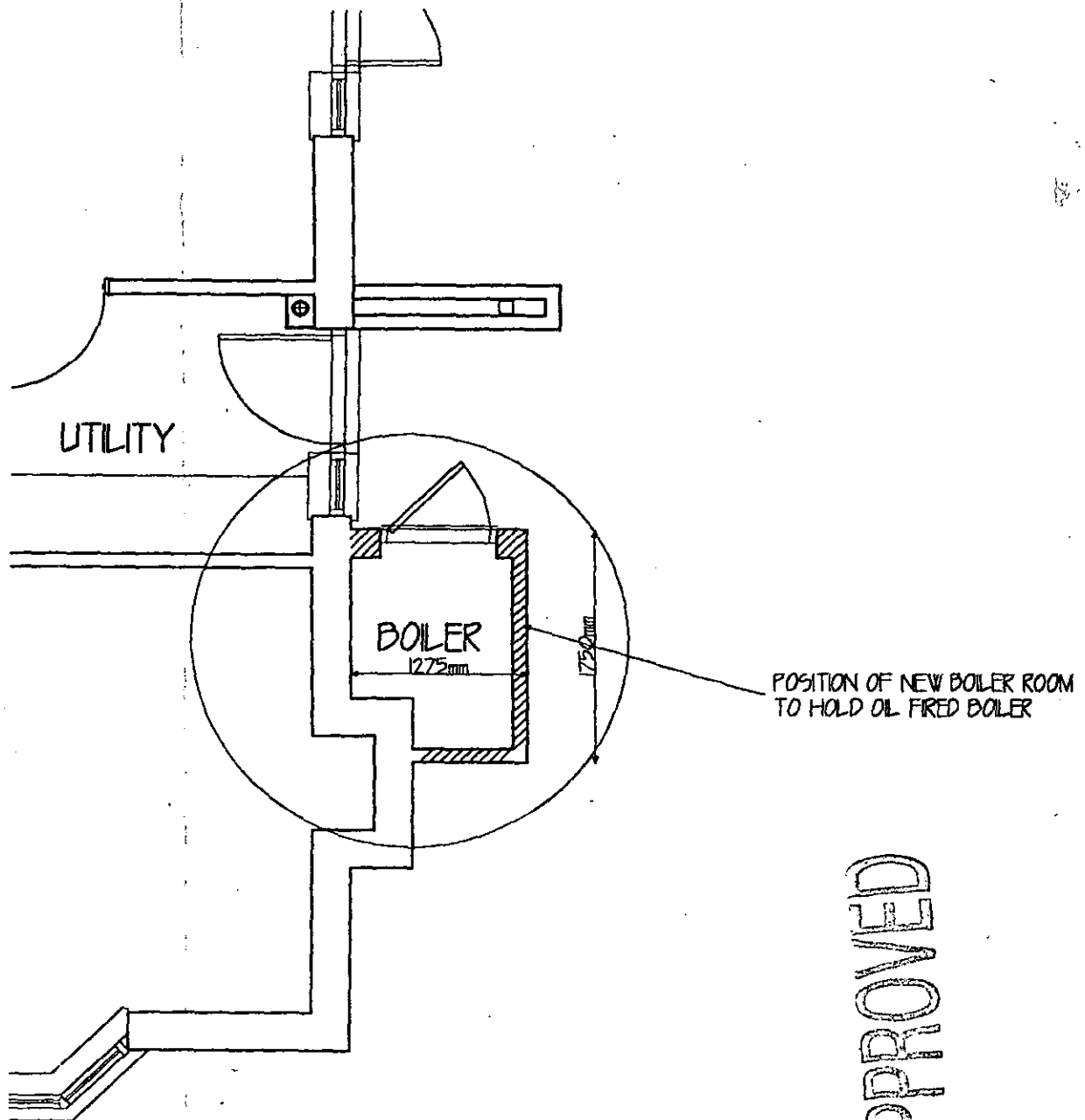

ENLARGED BOILER ROOM PLAN

APPROVED

08.FEB.2001 * 3331

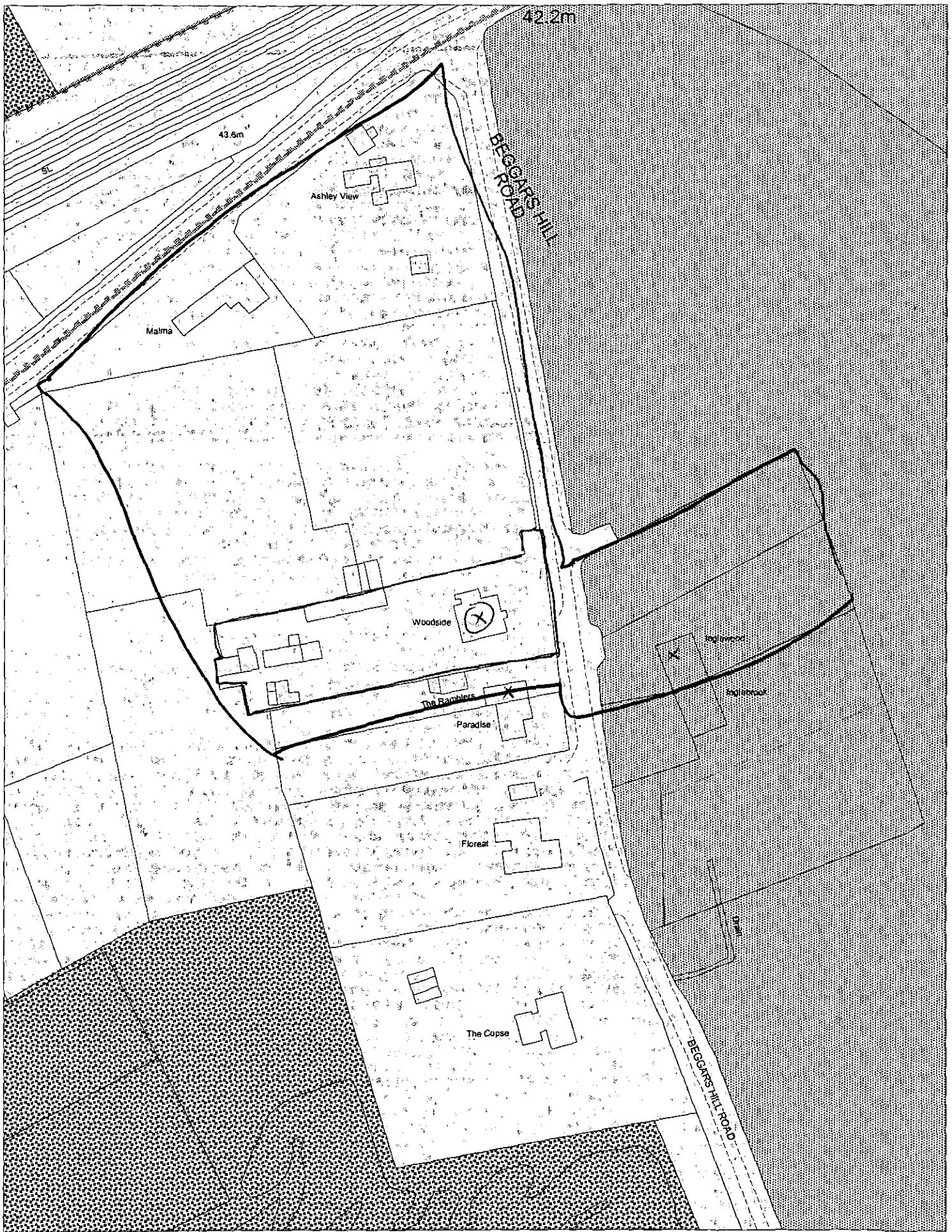

This map is based upon Ordnance Survey material with the permission of Ordnance Survey on behalf of the Controller of HMSO. © Crown Copyright.
Unauthorised reproduction infringes Crown Copyright and may lead to prosecution or civil proceedings.Wokingham District Council Licence LA086134

Development Control Section, Environmental Services, Wokingham District Council.

5 February 2001 Scale: 1 : 1250

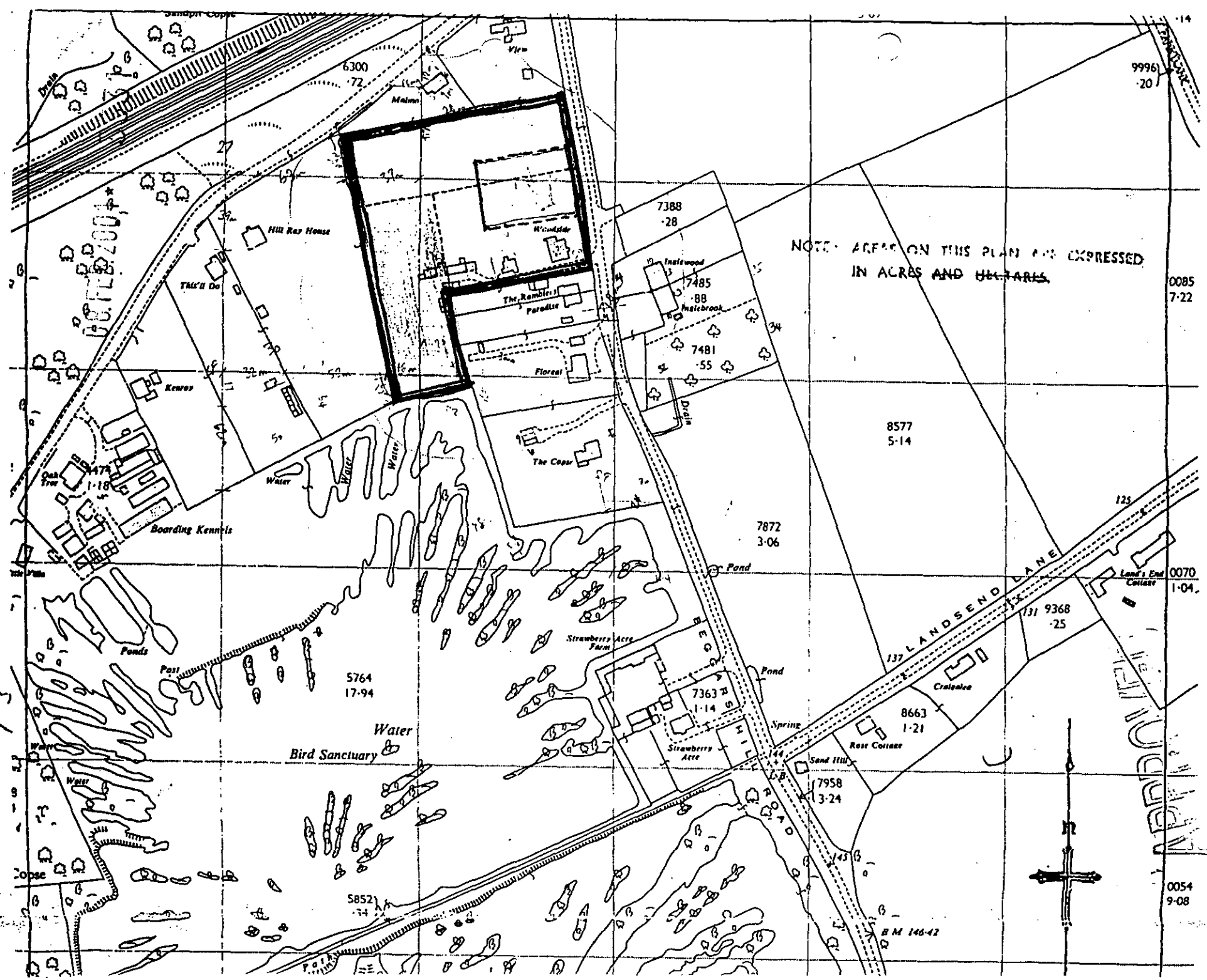
NOTE: AREAS ON THIS PLAN ARE EXPRESSED IN ACRES AND HECTARES.
Hill Ray House
This'll Do
Kenroy
Boarding Kennels
Oak Tree
Water
Ponds
Post
Bird Sanctuary
Woodside
The Ramblers
Paradise
Floreat
The Copse
Inglewood
Inglebrook
Drain
View
Malmo
Strawberry Acre Farm
Strawberry Acre
Pond
Spring
Sand Hill
Rose Cottage
Craigalea
Land's End Cottage
LANDSEND LANE
BEGGARS HILL ROAD
B M 146·42
6300 ·72
7388 ·28
7485 ·88
7481 ·55
8577 5·14
7872 3·06
5764 17·94
7363 1·14
8663 1·21
7958 3·24
9368 ·25
9996 ·20
0085 7·22
0070 1·04
0054 9·08
5852 ·34
1474 1·18

File.

1:2500