FLOOD RISK ENVIRONMENTAL

ASSESS. ADVISE. PROTECT.

Flood Risk Assessment

Site-specific flood risk assessment and surface water drainage statement for a garage conversion and single-storey front extension

24 The Delph, Lower Earley, Wokingham RG6 3AN

Client	Tina Cussen
Architect	Postlethwaite Hill Architects
Local planning authority	Wokingham Borough Council
Lead local flood authority	Wokingham Borough Council
Sewerage undertaker	Thames Water Utilities Ltd
FRE reference	FRE-DELPH-2026
Version	1.0 - for planning
Date	28 October 2026
Prepared and approved by	Antony Riozzi, Director

Flood Risk Environmental
A trading style of Charnwood Property Trading Ltd, Co. 12219010
Registered office: 1 Morgans Orchard, Nottingham Road, Barrow Upon Soar, LE12 8HZ
Floodriskenvironmental@gmail.com · 07826 705389

Document control

Version	Date	Description	Prepared	Approved
1.0	28 October 2026	First issue - for planning	A. Riozzi	A. Riozzi

Limitations

This report has been prepared by Flood Risk Environmental for Tina Cussen in support of a householder planning application for the development described. It should not be relied on by any other party, or for any other purpose, without FRE's written agreement.

The assessment is desk-based. It relies on Environment Agency data, publicly available information and information supplied by others (the architect's drawings and the client's project start sheet), which FRE has not verified on site. Ground levels are from Environment Agency LiDAR. No topographical survey, drainage survey or ground investigation has been provided.

Data and policy are as available on the date of this report.

Contents

Summary 4
1 Introduction 5
2 Site description 6
3 Planning policy and guidance 11
4 Flood risk to the site 13
5 Sequential and exception tests 21
6 Flood risk elsewhere and surface water drainage 22
7 Flood mitigation 25
8 Flood warning and emergency planning 27
9 Site-specific flood risk assessment checklist 28
10 Conclusions and recommendations 29
11 References 30

Appendices (bound in behind this report)

A Drawing FRE-DELPH-2026-1001 P1: flood risk and surface water drainage layout
B Environment Agency flood risk assessment data (Product 4), EIR2026/49074, 26 October 2026
C Wokingham Borough Council pre-application advice 252471, 20 October 2025
D Architect's drawings (Postlethwaite Hill Architects): A0057-PHA-XX-XX-DR-A-P0001, P0003 and M1001
E SuDSPod surface water calculations (Causeway Flow, FEH22 rainfall) and GreenBlue Urban SuDSPod technical data

Summary

This site-specific flood risk assessment (FRA) supports a householder application for the conversion of the integral garage and a small single-storey front extension at 24 The Delph, Lower Earley. It follows the Environment Agency's standing advice for minor extensions and is proportionate to the scale of the proposal, as the Planning Practice Guidance advises for minor development (paragraph 051).

Table S.1 Flood risk by source

Source	Finding	Risk to the site
Rivers	Flood Map for Planning: Flood Zone 2 over 44% of the plot (mainly the rear garden), Flood Zone 1 over 56%; no Flood Zone 3 on the site. The house, porch and most of the frontage are in Flood Zone 1; Flood Zone 2 covers strips along the south wall and the southern boundary. The Environment Agency Product 4 modelled 1% AEP plus climate change extent does not reach the site (nearest about 40 m), and the address has a very low chance of flooding to 20 cm, now and to 2036-2069.	Low
Surface water	Dry in the 3.3%, 1% and 0.1% AEP events, present day and 2061-2125 climate change (Flood Map for Planning).	Very low
Groundwater	SFRA mapping shows groundwater emergence within 0.5 m of the surface across much of Lower Earley; outside an Environment Agency groundwater flood alert area. No basement.	Low
Sewers	No sewer flooding known at the property; 103 incidents recorded across the RG6 3 postcode sector, 2000 to 2022 (SFRA).	Low
Reservoirs	Within the reservoir flood extents of Maiden Erlegh Lake (No. 1). Regulated reservoir; failure is extremely unlikely.	Residual

The key conclusions are:

- The proposal is householder development, so the sequential and exception tests do not apply (NPPF policies F5(2)(c) and F6(2)(a)).
- The estimated 1% AEP plus climate change flood level is 42.10 m AOD. The extension floor will match the existing ground floor, estimated at about 42.15 m AOD, with flood resistance and resilience to at least 42.70 m AOD, 600 mm above the estimated flood level, as the standing advice requires.
- The development will not increase flood risk elsewhere. Only the south-west corner of the extension, about 0.5 m², is at the edge of the Flood Zone 2 outline, displacing about 0.1 m³ in the design flood, and roof water passes through a SuDSPod planter, which holds the 1% AEP plus 40% climate change storm without flooding, to the existing drainage.
- Access to the house is unchanged and stays dry in the Environment Agency's modelled 1% AEP plus climate change flood, which does not reach the site; the first floor gives refuge above any flood level. The occupants are advised to register for flood alerts and government emergency alerts.

1 Introduction

1.1 Flood Risk Environmental (FRE) has been appointed by Tina Cussen to prepare a site-specific flood risk assessment (FRA) for a garage conversion and a single-storey front extension at 24 The Delph, Lower Earley, Wokingham RG6 3AN. The FRA accompanies a householder planning application to Wokingham Borough Council (WBC), prepared by Postlethwaite Hill Architects.

1.2 The proposal (drawing A0057-PHA-XX-XX-DR-A-P0001 Rev 2, Appendix D) comprises:

- conversion of the integral garage at the north end of the front of the house, with the garage door replaced by brickwork and a window;
- a single-storey front extension of about 4 m², used for storage, infilling between the south side wall and the existing porch and aligned with the front of the porch;
- changes to the front and side elevation fenestration.

1.3 WBC's pre-application response (252471, 20 October 2025, Appendix C) lists "Flood Zone 2/3" among the site constraints. The case officer advised that "Parts of the site lies within Flood Zone 2" and that the extension "would only have potential for a very minor incursion into Flood Zone 2", and quoted the Planning Practice Guidance on minor development. WBC Drainage expressed "concern with the site lying partly in Flood Zone 3" and requested a site-specific FRA, which the response lists as a validation requirement.

1.4 WBC's Local Validation List (September 2025) requires an FRA "for all proposals for new development, including household or small commercial extensions (under 250 sq.m), in Flood Zones 2, 3a and 3b", and notes that the FRA should include the design of surface water management systems and address safe access.

1.5 This FRA is proportionate to a minor extension, as the Planning Practice Guidance advises (paragraph 051), and follows the Environment Agency's standing advice for minor extensions. It:

- describes the site and the proposal (Section 2) and the relevant policy (Section 3);
- assesses flood risk to the site from all sources and sets the estimated flood level (Section 4);
- addresses the sequential and exception tests (Section 5) and flood risk elsewhere, including surface water drainage (Section 6);
- sets out the floor level and the flood resistance and resilience measures (Section 7) and flood warning and emergency arrangements (Section 8);
- cross-refers the content to the Planning Practice Guidance checklist (Section 9).

1.6 The assessment uses the Environment Agency flood risk assessment data (Product 4) for the site (EIR2026/49074, 26 October 2026, Appendix B), the Flood Map for Planning and the Environment Agency's address-level long-term flood risk information (both retrieved 27 October 2026), Environment Agency LiDAR, British Geological Survey mapping and the WBC Level 1 Strategic Flood Risk Assessment (SFRA). The architect's site plan and block plan were fitted to the Ordnance Survey National Grid for the mapping and drawing 1001. No topographical survey, drainage survey or ground investigation has been provided.

Table 1.1 Documents submitted

Document	Title	Revision / version
FRE-DELPH-2026-1001	Flood Risk and Surface Water Drainage - Layout (Appendix A)	P1
FRE-DELPH-2026	Flood Risk Assessment (this report)	1.0

2 Site description

Table 2.1 Site particulars

Address	24 The Delph, Lower Earley, Wokingham RG6 3AN
National grid reference	SU 75965 70772 (E 475965, N 170772)
Site area	246 m² (0.025 ha), within the architect's red line
Existing use	End-of-terrace two-storey house with integral garage, front driveway and rear garden
Proposed development	Garage conversion and single-storey front extension (about 4 m²)
Local planning authority / LLFA	Wokingham Borough Council
Sewerage undertaker	Thames Water Utilities Ltd
Existing ground levels	41.71 to 42.08 m AOD (EA LiDAR), effectively flat
Flood Zone	Flood Zone 2 (44% of the plot) and Flood Zone 1 (56%); no Flood Zone 3
Vulnerability classification	More vulnerable (dwelling house), NPPF Annex F Table 2

Location and existing site

2.1 The site is an end-of-terrace, two-storey house at the southern end of a short terrace (Nos. 21 to 24) in a residential estate in the Hawkedon ward of Earley (Figure 2.1). The house faces east onto the estate road (The Delph), with a tarmac driveway and a gravel bed at the front, a side passage along the south wall, and a rear garden with a patio and shed to the west (architect's photographs, drawing M1001, Appendix D). A landscaped green lies to the south across the estate road.

2.2 The red line encloses 246 m². The architect's site plan and block plan have been fitted to the Ordnance Survey National Grid by matching their base mapping, and the fit has been checked against the buildings in the Environment Agency LiDAR surface model, which agree to within about 0.5 m.

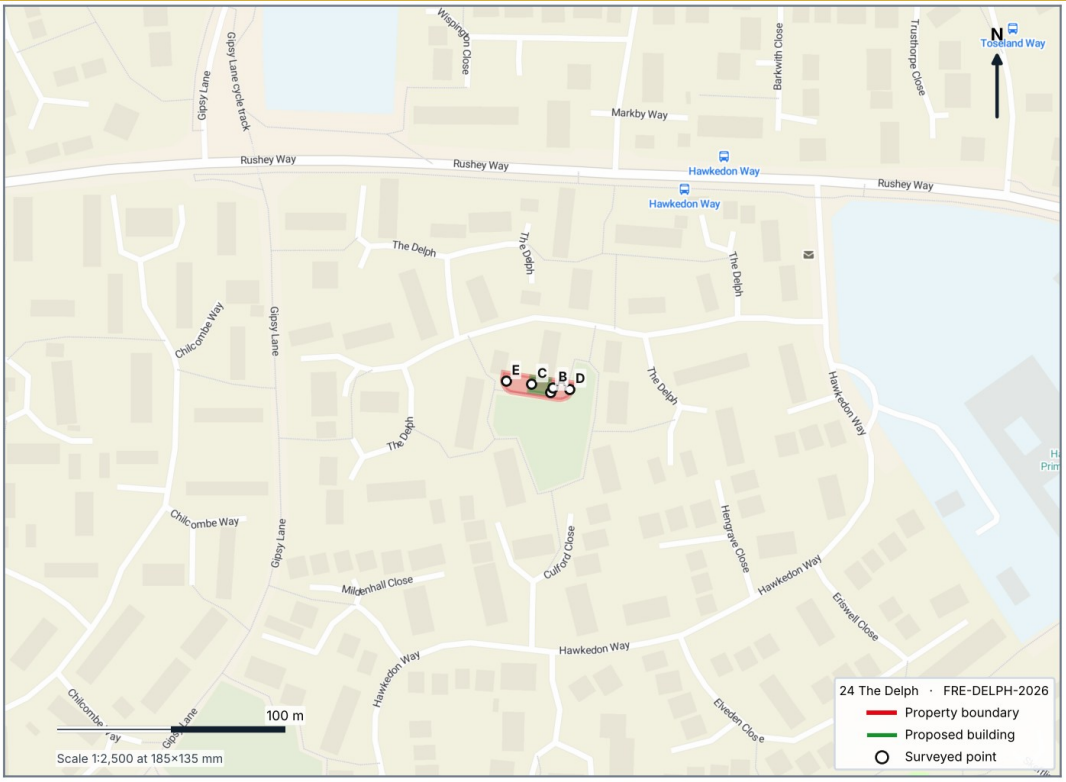

Basemap © MapTiler © OpenStreetMap contributors. Flood data © Environment Agency copyright/database rights. Geology © BGS/UKRI. OS © Crown copyright. Open data — not a substitute for a site-specific FRA.

Figure 2.1 Site location Source: MapTiler / OpenStreetMap contributors; site boundary from the architect's drawing

Topography

2.3 The Environment Agency LiDAR Composite DTM (1 m) shows ground levels within the site of 41.71 to 42.08 m AOD, averaging 41.93 m AOD (Figure 2.2). The site is effectively flat, slightly higher in the rear garden (about 41.95 to 42.05 m AOD) than at the frontage (41.73 to 41.88 m AOD). The client reports that the land is flat, with any slope towards the front. The wider area falls gently south-east, to about 41.4 to 41.6 m AOD some 60 m away, towards the River Loddon floodplain.

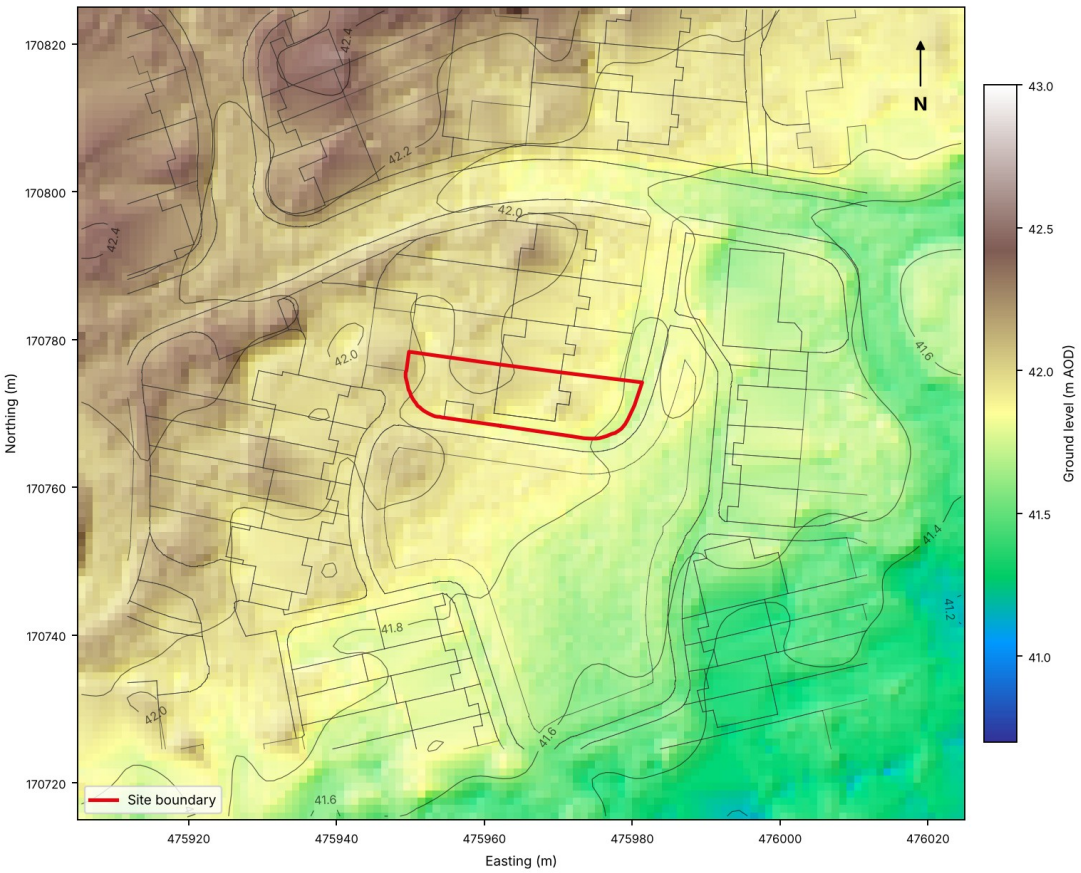

Figure 2.2 Existing ground levels (EA LiDAR Composite DTM 1 m) Source: Environment Agency; base mapping from the architect's site plan

Geology and groundwater

2.4 The British Geological Survey (BGS) 1:50,000 mapping (sheet E268 Reading) shows River Terrace Deposits (2), sand and gravel, over the London Clay Formation (clay, silt and sand). No artificial ground or mass movement deposits are mapped (Figures 2.3 and 2.4).

2.5 The SFRA groundwater mapping (SFRA Appendix E, Character Area 3) records that "the majority of the left bank of the Loddon has groundwater emergence levels less than 0.5m from the surface", covering much of the urban areas of Woodley and Lower Earley. The Environment Agency's long-term flood risk service places the site outside a groundwater flood alert area.

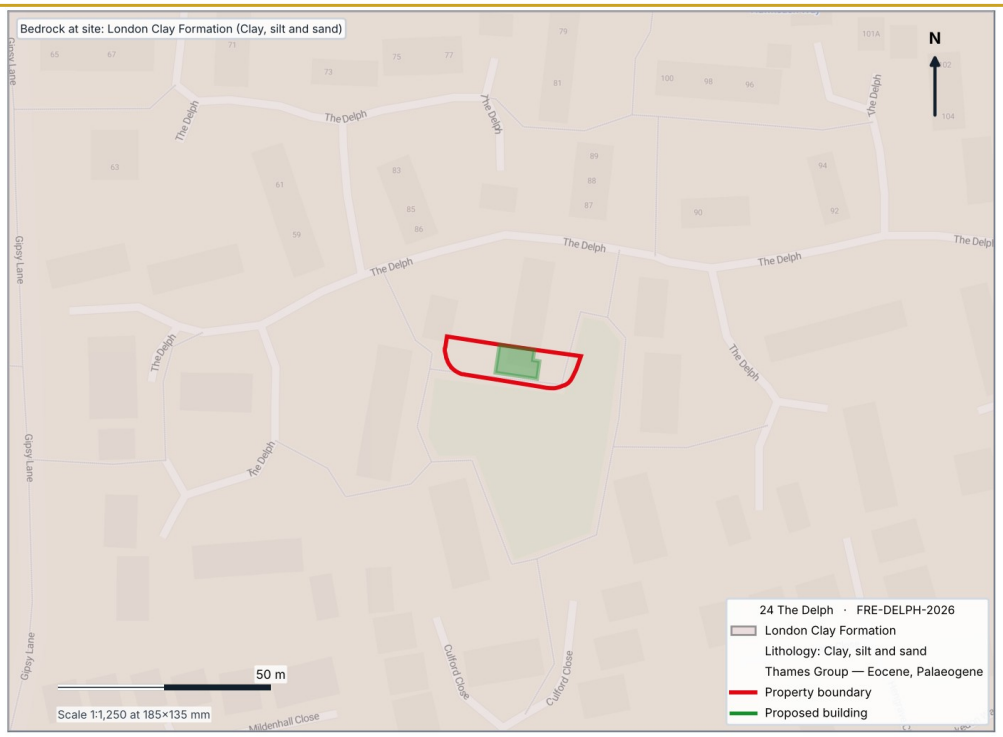

Figure 2.3 BGS 1:50,000 bedrock geology Source: British Geological Survey (Contains BGS materials © UKRI 2026)

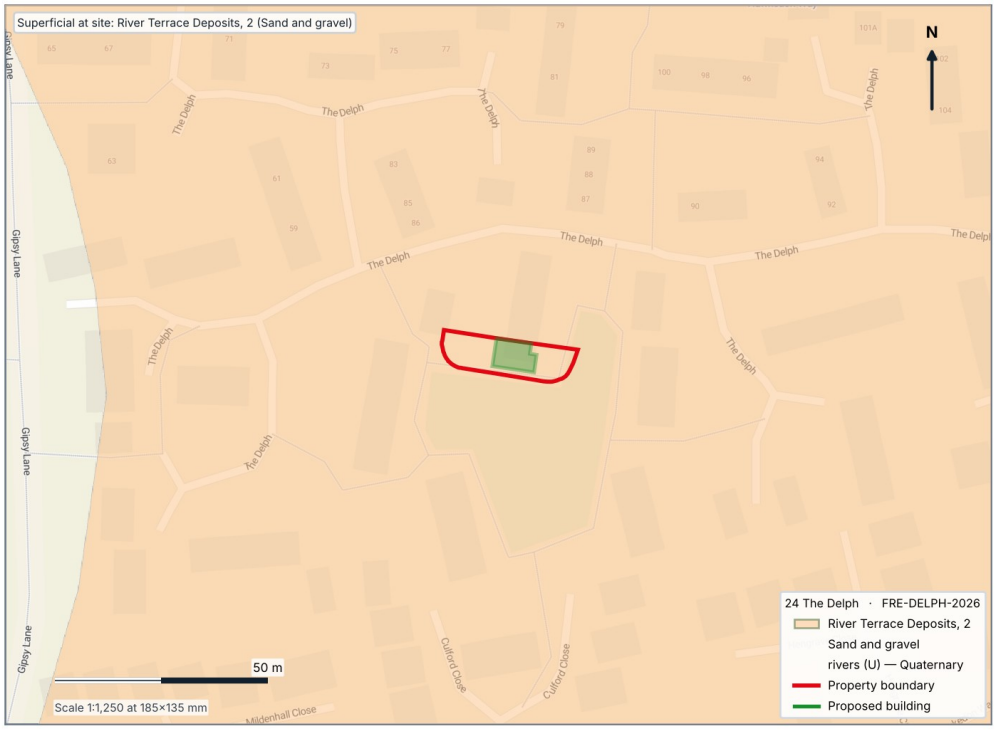

Figure 2.4 BGS 1:50,000 superficial deposits Source: British Geological Survey (Contains BGS materials © UKRI 2026)

Watercourses

2.6 There is no watercourse on or next to the site (client's project start sheet). The nearest statutory main river is the River Loddon, about 0.7 km to the east. The Environment Agency's modelled river flooding at The Delph follows the estate roads from the north-west (Product 4, Appendix B), in line with flow from the ordinary watercourse system that drains east from Maiden Erlegh Lake, about 0.9

km to the west-north-west, through Lower Earley to the River Loddon. The nearest mapped watercourse is an unnamed ordinary watercourse about 200 m to the north.

Existing drainage

2.7 The client reports that the house drains foul and surface water to the public sewer, with a manhole on the rear patio outside the back door. There are no drainage plans or sewer records, and no known sewers cross the site.

3 Planning policy and guidance

3.1 The national and local policy and guidance relevant to the proposal are summarised in Tables 3.1 and 3.2. Each document was checked at source on 27 October 2026.

Table 3.1 National policy and guidance

Document	Relevant requirements
National Planning Policy Framework (MHCLG, published 17 August 2026, updated 29 September 2026)	F4(1): a site-specific FRA "should accompany all development proposals in Flood Zones 2, 3a, and 3b", (3) "appropriate to the scale, nature, and location of development". F5(2)(c): the sequential test is not used for "i. Householder development". F6(2)(a): the exception test is not applied where the sequential test is not required. F7(1): development "should not present a risk from flooding to potential occupiers, users, or visitors, and should not increase flood risk elsewhere"; F7(2)(b)-(d): safe throughout its lifetime, safe access and escape routes where appropriate, "appropriately flood resistant and resilient". F8(1): SuDS "proportionate to the nature and scale of the proposal". Annex F Table 2: dwelling houses are "More vulnerable"; Table 3: appropriate in Flood Zone 2.
Planning Practice Guidance: Flood risk and coastal change (updated 17 September 2025)	Para 006 (7-006-20220825): residential development "can be assumed to have a lifetime of at least 100 years". Para 051 (7-051-20220825): minor development includes householder extensions; "A pragmatic approach should be taken to the scope and level of detail of the assessment". Para 021 (7-021-20220825): an extension to an existing house would generally need a less detailed assessment, using the SFRA and the Environment Agency's flood risk information. Para 056 (7-056-20220825): surface water hierarchy. Para 080 (7-080-20220825): site-specific FRA checklist.
Preparing a flood risk assessment: standing advice (Environment Agency, updated 28 May 2026)	Minor extensions: "a householder or non-domestic extension with a floor space of no more than 250 square metres". The FRA should include the estimated flood level for the design flood (1% AEP river flood plus climate change). Floor levels "at least 600 millimetres (mm) above the estimated flood level" (300 mm with a high level of certainty). Where floors cannot be raised, flood resistance and resilience measures "should protect the property to at least 600mm above the estimated flood level", following the CIRIA Code of Practice for Property Flood Resilience. The FRA should appraise the datasets it uses, and check with the LPA whether the area has increased flood risk from multiple minor extensions.
Flood risk assessments: climate change allowances (Environment Agency, updated 27 May 2022)	Loddon and tributaries management catchment. Peak river flow, more vulnerable development in Flood Zone 2: central allowance, 14% for the 2080s. Peak rainfall, 1% AEP, upper end for the 2070s: 40%.
Approved Document H (2015 edition), Building Regulations 2010	H3: rainwater to discharge in priority to an infiltration system, a watercourse, then a sewer.

Table 3.2 Local policy and guidance

Document	Relevant requirements
Wokingham Core Strategy (2010), Policies CP1 and CP3	CP1(9): development should "Avoid increasing (and where possible reduce) risks of or from all forms of flooding (including from groundwater)"; CP1(4): adequate drainage. CP3(c): no detrimental impact on watercourses.
Managing Development Delivery Local Plan (2014), Policies CC09 and CC10	CC09 Development and Flood Risk (from all sources): "All sources of flood risk, including historic flooding, must be taken into account"; minor development is exempt from the sequential test (3(c)). CC10 Sustainable Drainage: surface water, including climate change, "managed in a sustainable manner"; SuDS "where practicable".
Wokingham Borough Local Plan Update (emerging)	At examination; the Inspectors consider it likely capable of being found sound subject to modifications, with adoption expected in 2027. Policy FD1 Development and flood risk exempts householder development from the sequential test (4(c)) and requires an FRA in Flood Zones 2 and 3 (6(c)); FD2 Sustainable drainage. Weight according to its stage.
WBC Local Validation List (September 2025)	FRA required for household extensions in Flood Zones 2, 3a and 3b, including the design of surface water management systems and safe access.
WBC Level 1 SFRA (JBA Consulting, May 2023)	8.2.1: FRA required for householder developments in Flood Zones 2 and 3. 8.2.5: "Lowering existing FFLs ... would not be acceptable". Appendix E: groundwater emergence. Table 5-3: Thames Water sewer flooding records by postcode sector. Appendix F (Cumulative Impact Assessment): the Loddon (Swallowfield to River Thames confluence) is one of five high-risk catchments.
WBC Sustainable Drainage Systems (SuDS) Strategy (2016)	Applies to all new development in Wokingham as the basis for assessing drainage provision.

4 Flood risk to the site

4.1 Flood risk to the site has been assessed from all sources using the Environment Agency Product 4 for the site (Appendix B), the Flood Map for Planning, the Environment Agency's address-level long-term flood risk information, LiDAR and the SFRA. The mapping in Figures 4.1 to 4.7 was prepared by FRE from Environment Agency data, including the Product 4 (Figure 4.2), with the architect's red line. Table 4.1 summarises the findings.

Table 4.1 Sources of flood risk

Source	Evidence	Risk to the site
Rivers	Flood Zone 2 over 44% of the plot, Flood Zone 1 over 56%, no Flood Zone 3 (nearest about 10 m north). The flood zones plus climate change outline follows the Flood Zone 2 edge at the site. Product 4: the modelled 1% AEP plus climate change extent does not reach the site (nearest about 40 m). Very low chance of flooding to 20 cm, 30 cm or 60 cm at the address, present day and 2036-2069. No formal flood defences.	Low; managed by design (Section 7)
Surface water	Dry in the 3.3%, 1% and 0.1% AEP events, present day and 2061-2125 climate change. Very low at the address, present day and 2040-2060.	Very low
Groundwater	SFRA: groundwater emergence within 0.5 m of the surface across much of Lower Earley. Outside an Environment Agency groundwater flood alert area. No basement.	Low
Sewers	No incidents known at the property. SFRA Table 5-3: 103 sewer flooding incidents across the RG6 3 postcode sector, 2000 to May 2022.	Low
Reservoirs	Within the wet day and dry day reservoir flood extents of Maiden Erlegh Lake (No. 1).	Residual
Historic flooding	No recorded flood outlines on or within 250 m of the site. The Product 4 lists eight main river events (1947 to 2009), none affecting the location.	Low

Rivers

4.2 The Flood Map for Planning (rivers and sea, NaFRA2 national model, Figure 4.1) places 44% of the plot (109 m²) in Flood Zone 2 and 56% in Flood Zone 1. Flood Zone 2 covers most of the rear garden, a narrow strip, up to about 1 m wide, along the south wall of the house (about 4 m² of the house footprint), the south-west corner of the proposed extension (about 0.5 m²) and a strip about 1 m wide along the southern boundary of the frontage. The rest of the house, the porch with the front door, the garage and most of the frontage are in Flood Zone 1. There is no Flood Zone 3 on the site; the nearest is about 10 m north of the site boundary, in The Delph. The Flood Zones plus climate change outline (1% AEP, 2070 to 2125) covers the same parts of the site as Flood Zone 2 and a little more at its edge (about 4 m²). The flood zone outlines were taken from the Environment Agency data in British National Grid coordinates and overlaid on the georeferenced red line.

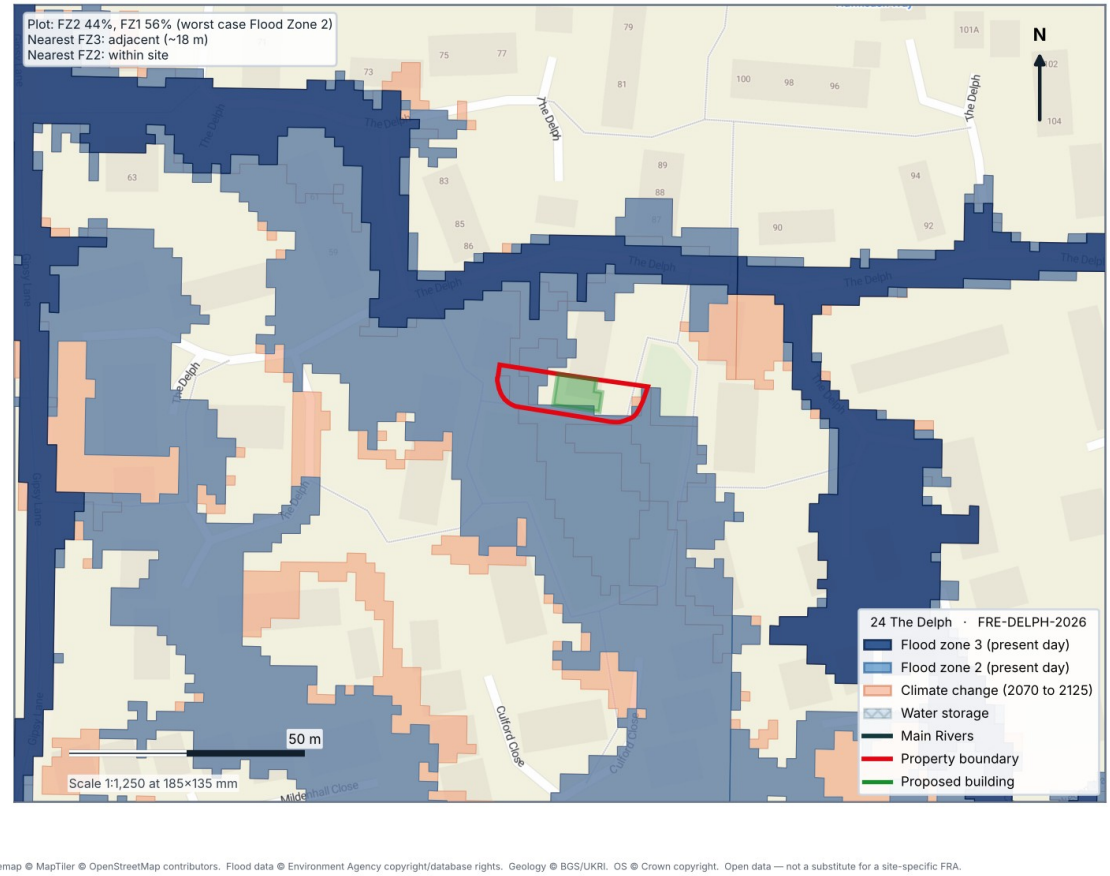

Figure 4.1 Flood Map for Planning: rivers and sea Source: Environment Agency (retrieved 27 October 2026)

4.3 The Environment Agency Product 4 (Appendix B) confirms that the area is covered by the NaFRA2 new national model and that there are no formal flood defences. The Product 4 is centred on E 475893, N 170821, in The Delph about 85 m north-west of the house; its statement that the "selected location is in flood zone 3" refers to that point, not to the site. It provides banded depths at 25 sample points on a 51 m grid, none of which falls on the site. The sample points nearest the site (points 9 and 10, about 20 m west and 30 m east of the house) are dry in every scenario, defended and undefended, including the 0.1% AEP event with climate change. The deepest bands in the selected area (up to 1.2 to 2.3 m) are in the flow route about 150 m to the north-west, around point 17.

4.4 The Product 4 depth maps also show the modelled extent of the 1% AEP flood, defended and undefended, present day and with climate change. The 1% AEP plus climate change extent has been digitised from the Product 4 and is shown in Figure 4.2. The modelled flooding follows a flow route running north to south about 120 m west of the site, with branches to the north and along The Delph. It does not reach the site, the estate road or its junction with The Delph: the nearest modelled flooding is on The Delph, about 40 m north-west of the site boundary. The defended and undefended extents are the same, as there are no formal flood defences. The Flood Map for Planning shows Flood Zone 3 along The Delph north of the site and Flood Zone 2 on part of the plot; the Product 4 modelled 1% AEP plus climate change extent is smaller and does not reach the site.

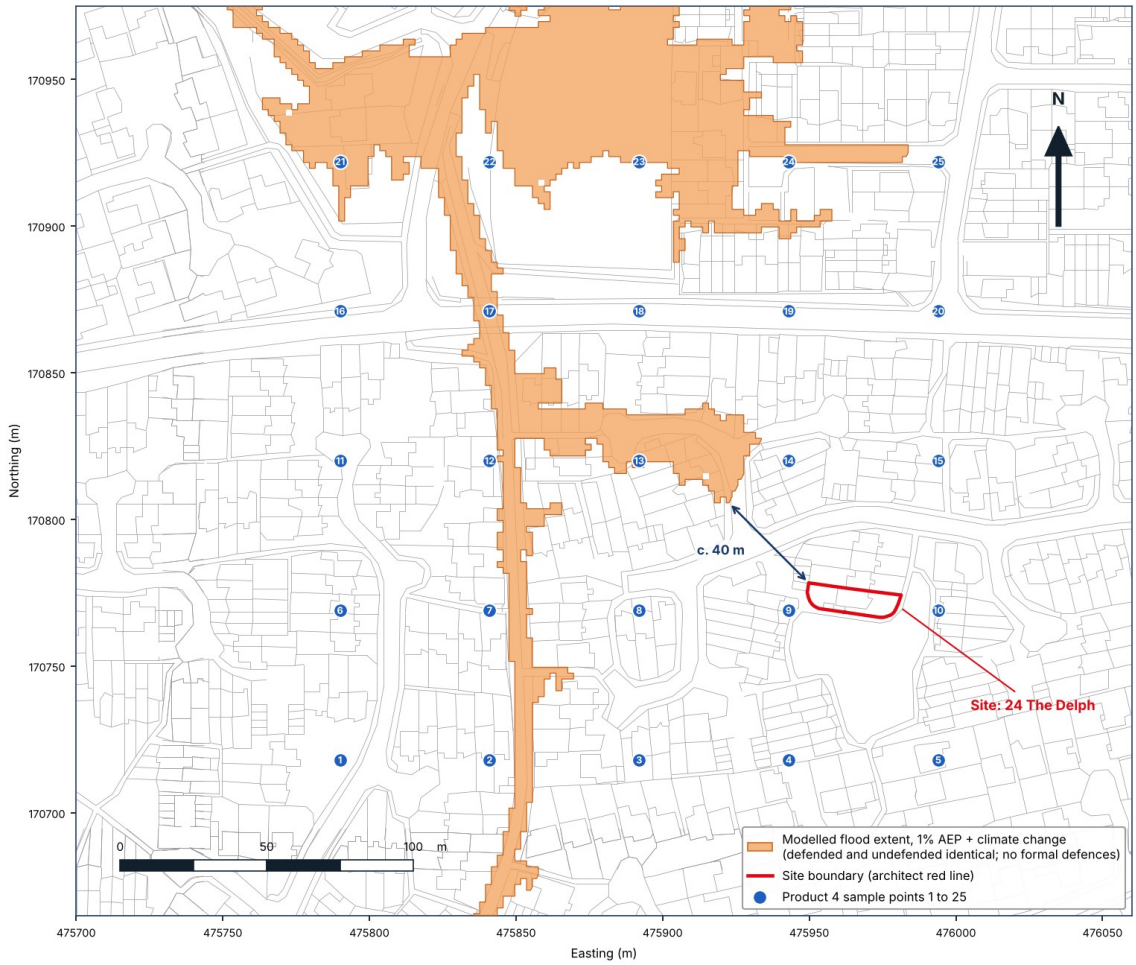

Figure 4.2 Product 4: modelled flood extent, 1% AEP plus climate change Source: Environment Agency Product 4 EIR2026/49074 (12 October 2026), digitised by FRE; site boundary from the architect's drawing

4.5 The Environment Agency's address-level long-term flood risk information for No. 24 (retrieved 27 October 2026) gives a very low chance of flooding from rivers, now and between 2036 and 2069, and a very low chance of flooding to 20 cm, 30 cm and 60 cm in both periods. This is the only depth information available for the site: the Product 4 contains national-model banded depths and no modelled flood levels. It is not a design level.

4.6 The NaFRA2 long-term risk mapping (Figure 4.3), on a 2 m grid, shows the house, including the porch, at very low likelihood, consistent with the address-level result. The rear garden is at low likelihood, and the proposed extension and the east end of the driveway are at low likelihood, rising to medium for 2036 to 2069.

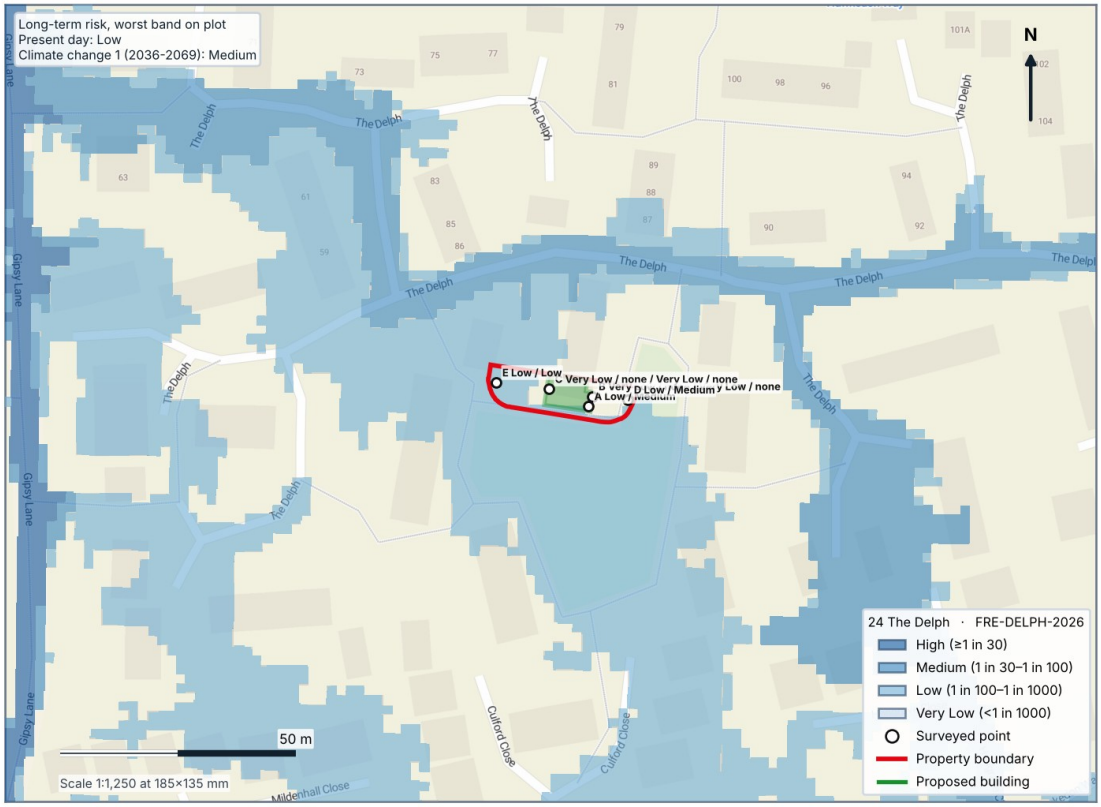

Figure 4.3 Long-term flood risk from rivers and the sea (NaFRA2) Source: Environment Agency (retrieved 27 October 2026)

Estimated flood level

4.7 The standing advice requires the FRA to state the estimated flood level for the design flood, a 1% AEP river flood plus an allowance for climate change. As the Environment Agency cannot provide modelled levels here, FRE has estimated it from the Environment Agency outline and LiDAR. The Flood Zones plus climate change outline on the site covers ground between 41.71 and 42.08 m AOD. Taking the highest of these, rounded up, gives an estimated flood level of **42.10 m AOD**.

4.8 This is a precautionary estimate, taken from the highest ground within the Flood Map for Planning outline at the site; the Product 4 modelled 1% AEP plus climate change extent does not reach the site (Figure 4.2). Where the outline meets the house and the extension, the ground is between about 41.76 and 41.98 m AOD, so the estimate implies a depth there of up to about 0.35 m. The development is residential and is taken to have a lifetime of at least 100 years (Planning Practice Guidance paragraph 006); the Flood Zones plus climate change outline covers the period to 2125. The estimated level is used in Section 7 to set the flood resistance and resilience level; it is not a modelled design level.

Flood warning

4.9 The site is not within an Environment Agency flood warning area or flood alert area. The nearest are the River Loddon at Lower Earley and Sindlesham flood warning area and the Lower River Loddon flood alert area, both about 220 m away (Figure 4.4).

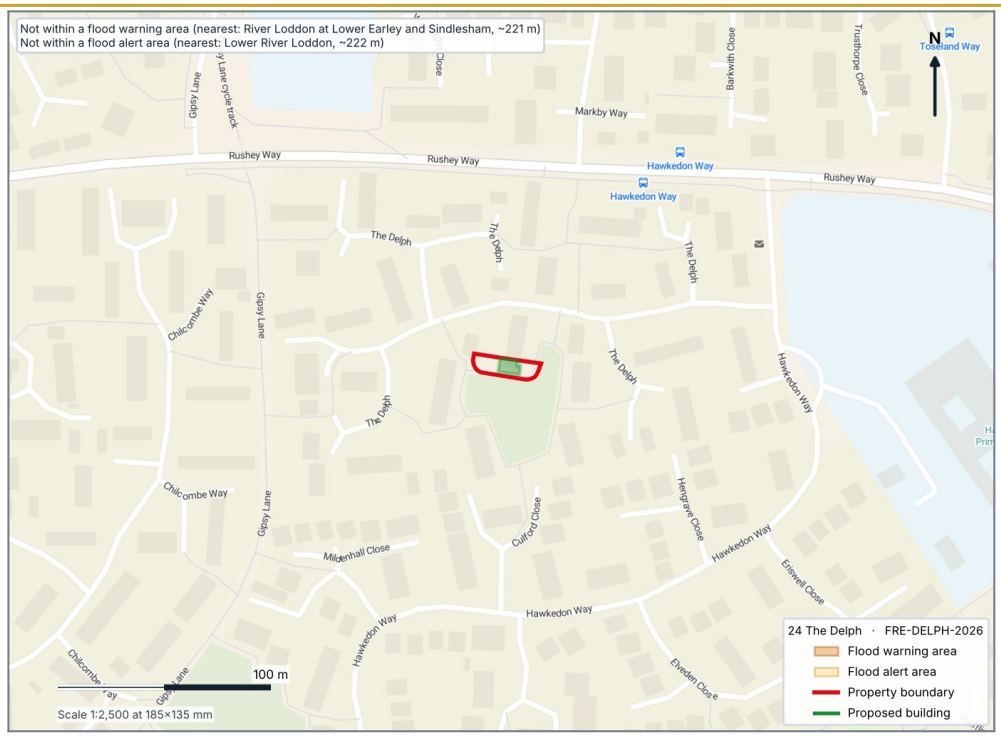

Basemap © MapTiler © OpenStreetMap contributors. Flood data © Environment Agency copyright/database rights. Geology © BGS/UKRI. OS © Crown copyright. Open data — not a substitute for a site-specific FRA.

Figure 4.4 Flood warning and flood alert areas Source: Environment Agency (retrieved 27 October 2026)

Surface water

4.10 The Flood Map for Planning surface water mapping (May 2026) shows the whole site dry in the 3.3%, 1% and 0.1% AEP events, both present day and with upper end climate change to 2061-2125 (Figures 4.5 and 4.6). The address-level information gives a very low chance of surface water flooding, now and between 2040 and 2060, and a very low chance of flooding to 20 cm. The nearest hotspots in the Lower Earley surface water management plan (SFRA 2.3.10) are some distance away, the closest being Egremont Drive, about 430 m to the west-north-west.

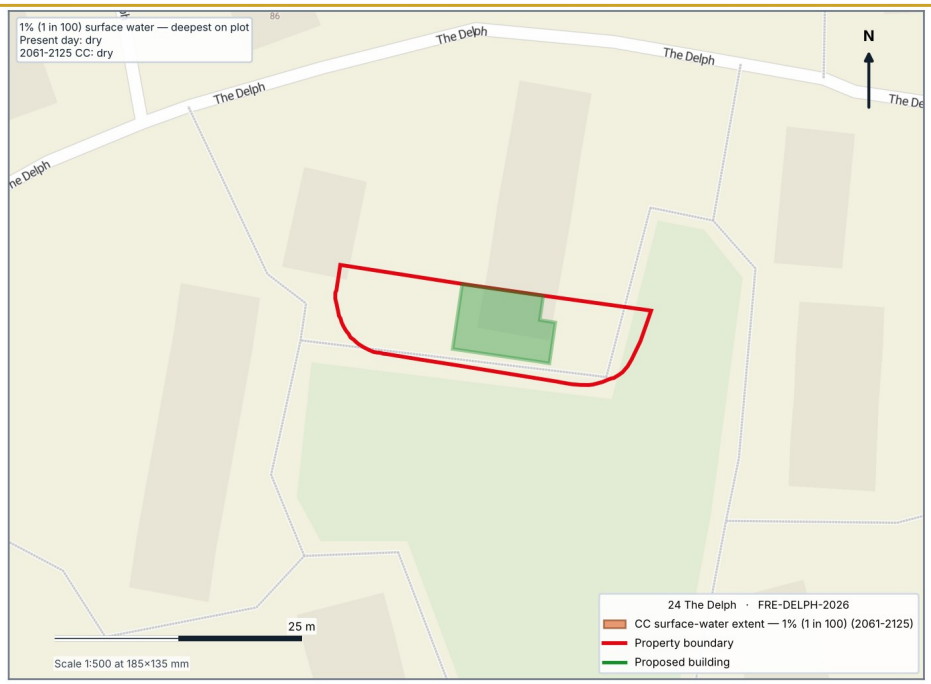

Basemap © MapTiler © OpenStreetMap contributors. Flood data © Environment Agency copyright/database rights. Geology © BGS/UKRI. OS © Crown copyright. Open data — not a substitute for a site-specific FRA.

Figure 4.5 Surface water, 1% AEP with climate change (2061-2125) Source: Environment Agency Flood Map for Planning (retrieved 27 October 2026)



Basemap © MapTiler © OpenStreetMap contributors. Flood data © Environment Agency copyright/database rights. Geology © BGS/UKRI. OS © Crown copyright. Open data — not a substitute for a site-specific FRA.

Figure 4.6 Surface water, 0.1% AEP with climate change (2061-2125) Source: Environment Agency Flood Map for Planning (retrieved 27 October 2026)

Groundwater

4.11 The SFRA mapping indicates groundwater emergence within 0.5 m of the surface across much of Lower Earley (Section 2), and the River Terrace Deposits beneath the site are permeable. The site is outside an Environment Agency groundwater flood alert area, and no groundwater flooding of the property is known. The proposal has no basement, and the extension floor will be a ground-bearing slab with a continuous damp-proof membrane (Section 7). The risk is low.

Sewers

4.12 The SFRA (Table 5-3) records 103 sewer flooding incidents across the RG6 3 postcode sector between 2000 and May 2022 (Thames Water records). These relate to the whole sector, and no sewer flooding is known at the property. A non-return valve is recommended on the new surface water connection (Section 7). The risk is low.

Reservoirs

4.13 The site lies within the Environment Agency's wet day and dry day reservoir flood extents for Maiden Erlegh Lake (No. 1), owned by Earley Town Council (Figure 4.7). Large raised reservoirs are regulated under the Reservoirs Act 1975, with regular inspection and supervision. The Environment Agency notes that flooding from reservoirs is "extremely unlikely" and that "There has been no loss of life due to a reservoir failing in the UK since 1925". This is a residual risk, managed through the reservoir regulation regime and the emergency arrangements in Section 8.

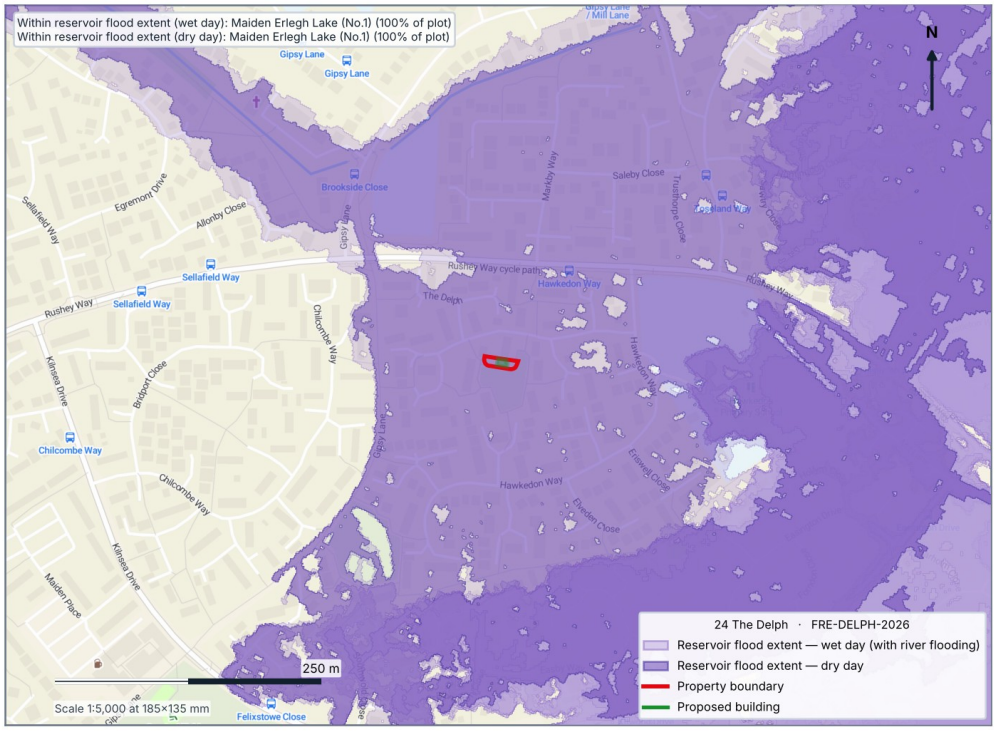

Figure 4.7 Reservoir flood extents (wet day and dry day) Source: Environment Agency (retrieved 27 October 2026)

Historic flooding

4.14 There are no Environment Agency recorded flood outlines or historic flood map outlines on or within 250 m of the site. The Product 4 lists eight main river flood events between 1947 and 2009, none of which affected the location. WBC's Section 19 flood investigation into the flooding of 31 March 2023 (JBA, November 2024) recorded internal flooding of one property in Earley, on Mill Lane, from a tributary of the River Loddon; it records no flooding at The Delph.

Suitability of the data

4.15 The standing advice asks the FRA to appraise the datasets used. The Flood Map for Planning flood zones and the Flood Zones plus climate change outline come from the Environment Agency's NaFRA2 new national model, published in March 2025; the Environment Agency confirms that the flood map at this location is based on that model (EIR letter, Appendix B). They are national-scale mapping for planning, suitable for identifying the flood zone and the need for this FRA, but they give no flood levels. The Product 4 (data created 12 October 2026) comes from the same model and

gives the modelled 1% AEP extents and banded depths at sample points, with no levels; it is the best modelled information for the site and shows the site outside the 1% AEP plus climate change extent. The address-level information (retrieved 27 October 2026) is the Environment Agency's assessment for the property itself. The LiDAR has a stated vertical accuracy of +/-15 cm (RMSE), and the existing ground floor level is estimated from a photograph. These uncertainties are covered by rounding the estimated flood level up, using the full 600 mm allowance for the protection level and confirming the floor level by survey before detailed design. For a minor extension, the data are proportionate to the scale of the proposal and the degree of risk.

4.16 Overall, the site is at low risk of flooding from rivers, very low risk from surface water and low risk from groundwater and sewers, with a residual risk from reservoir failure. The river flood risk is confined to the edge of the Flood Zone 2 outline and is addressed by the measures in Section 7.

5 Sequential and exception tests

5.1 The house is a dwelling, classified as "More vulnerable" in NPPF Annex F Table 2. More vulnerable development is appropriate in Flood Zone 2 (Annex F Table 3).

5.2 The proposal is householder development. NPPF policy F5(2)(c) states that the sequential test is not used for householder development, and policy F6(2)(a) that the exception test is not applied where the sequential test is not required. MDD Local Plan Policy CC09, emerging Policy FD1 and the SFRA (3.3.1) take the same approach.

5.3 The proposal does not create a new dwelling or increase the number of occupants. The sequential and exception tests are therefore not required.

6 Flood risk elsewhere and surface water drainage

Floodplain storage and flood flows

6.1 Only the south-west corner of the extension, about 0.5 m², lies within the Flood Zone 2 and Flood Zones plus climate change outlines, at their edge. The ground there is about 41.84 to 41.90 m AOD, so at the estimated flood level of 42.10 m AOD the extension would displace about 0.1 m³ of floodwater: a negligible volume. None of the site is in Flood Zone 3 or the functional floodplain.

6.2 The extension sits in front of the house, within the building line of the existing porch, and does not cross the side passage or any flow route. The garage conversion is within the existing footprint. External ground levels and boundary treatments are unchanged. WBC's pre-application advice describes the extension as a "very minor incursion into Flood Zone 2". The proposal will therefore not increase flood risk elsewhere.

6.3 The standing advice asks whether a minor extension is in an area where flood risk is increased by multiple minor extensions. The SFRA Cumulative Impact Assessment (SFRA Appendix F) ranks the Loddon (Swallowfield to River Thames confluence) catchment, into which the site drains, as one of five high-risk catchments for the cumulative impact of development, and recommends that FRAs consider measures that help reduce flood risk downstream. The off-site effect of this proposal is negligible: the extension displaces about 0.1 m³ at the edge of Flood Zone 2, outside the Product 4 modelled 1% AEP plus climate change extent, and does not obstruct any flow route; its roof drains to a SuDSPod planter, which slows and filters the runoff before it reaches the existing drain. The works are small and within the plot, and runoff from them will be kept on site during construction. The proposal therefore makes no measurable contribution to cumulative flood risk in the catchment.

Surface water drainage

6.4 The extension adds about 4 m² of roof, replacing part of the gravel bed in front of the house. The architect's elevations show a single new flat roof over the extension and the existing porch, about 7 m² in all. The driveway and the rest of the site are unchanged. The surface water options have been considered in the order of the drainage hierarchy (Table 6.1).

Table 6.1 Surface water drainage hierarchy

Destination	Assessment	Used
Collection for non-potable use	No separate water butt: the porch downpipe is diverted into a SuDSPod planter (below), and a water butt on the same downpipe would not work with it.	No
Infiltration to ground	Not practicable. A soakaway should be at least 5 m from a building (Approved Document H, para 3.25(a)) and 2.5 m from the boundaries; on this plot that leaves only a narrow strip at the front of the driveway and part of the rear garden, which is in Flood Zone 2 and would need a pipe run around the house. The SFRA indicates groundwater within 0.5 m of the surface in Lower Earley, too close to the surface for a soakaway to work. A soakaway would not be proportionate for about 4 m² of roof.	No
Surface water body	No watercourse on or next to the site.	No
Sewer (via the existing drainage)	The house already drains surface water to the public sewer. Roof water passes through the SuDSPod, whose outlet connects to the existing surface water drain at the porch downpipe. No new connection to the public sewer; no discharge to highway drainage.	Yes

6.5 The proposed arrangement is shown on drawing 1001 (Appendix A and Figure 6.1), drawn over the architect's proposed ground floor plan. The new roof falls to a gutter that discharges to the existing

porch downpipe, so no new rainwater pipe is needed. The downpipe is diverted into a SuDSPod, a free-standing GreenBlue Urban planter unit about 1.25 m long, 0.53 m wide and 0.83 m high, standing at ground level against the north side of the porch, clear of the new window to the converted garage. It holds a specially designed soil mix and planting that slow and filter the roof runoff. GreenBlue Urban rates the unit to manage the 30-year storm from a 50 m² roof, with an optimum roof area of 50 to 80 m²; the roof draining to it is about 7 m². As a planter it is a bioretention-type SuDS component (CIRIA C753, Chapter 18). The SuDSPod outlet connects into the existing surface water drain at the base of the downpipe, to Approved Document H, with a non-return valve; the position and depth of the drain will be confirmed on site.

6.6 The SuDSPod has been modelled in Causeway Flow (version 16.0) with FEH22 rainfall for the site, a runoff coefficient of 0.95 and storms from 15 minutes to 24 hours, for the 1, 2 and 30 year events and the 1% AEP event with a 40% allowance for climate change (the upper end allowance for the Loddon and tributaries management catchment, 2070s). No allowance for urban creep is made, as the catchment is the extension roof. The unit is represented as a tank 0.83 m deep with a storage area of 0.4 m² and 80% voids, about 0.27 m³, drained by staged small outlets with a high-level overflow. The roof area shows as 0.001 ha in the printout, not less than the 7.06 m² of roof. The printout is in Appendix E, with the manufacturer's data sheets, frequently asked questions and quick start guide. The results are summarised in Table 6.2.

Table 6.2 SuDSPod performance (Causeway Flow, FEH22 rainfall, Appendix E)

Event	Critical storm	Peak inflow (l/s)	Peak depth in unit (m)	Volume stored (m³)	Peak outflow (l/s)	Flooding
1 year	30 min summer	0.1	0.03	0.010	<0.1	None
2 year	120 min summer	0.1	0.07	0.023	<0.1	None
30 year	30 min summer	0.4	0.20	0.064	0.1	None
100 year + 40% climate change	60 min summer	0.6	0.38	0.121	0.2	None

6.7 In the 1% AEP plus 40% climate change event the water in the unit peaks at 0.38 m, under half its 0.83 m depth and 0.32 m below the overflow, and nothing floods. Flow to the existing drain peaks at about 0.2 l/s, against 0.6 l/s coming off the roof. The roof is about 14% of the 50 m² roof for which GreenBlue Urban rates the unit in the 30-year storm. The gutter and downpipe will be sized to Approved Document H (H3), and a non-return valve on the connection stops the drain backing up into the unit. In a storm beyond the design event, flow above the unit's capacity passes over its overflow to the existing drain, which already takes the porch downpipe.

6.8 The increase in runoff from about 4 m² of new roof is negligible, and roof water is low hazard for water quality. The SuDSPod slows and filters the runoff from the whole new roof, including the porch, before it reaches the existing drain, and in the 1% AEP plus 40% climate change event it cuts the peak flow from the roof from 0.6 l/s to about 0.2 l/s. This gives a betterment over the existing porch, which drains directly to the downpipe, and provides a SuDS component on the site, in line with WBC's SuDS Strategy and the SFRA recommendation that SuDS are used on all development sites (SFRA Appendix F). The drainage will be built to Approved Document H.

6.9 The SuDSPod, gutter and downpipe will be maintained by the homeowner for the lifetime of the development, following the principles in CIRIA C753 (Chapter 32) and the manufacturer's guidance, as set out in Table 6.3.

Table 6.3 Maintenance of the surface water drainage (homeowner)

Component	Task	Frequency
Gutter and downpipe	Clear leaves and debris; check joints and the diverter for leaks.	Annually, and after autumn leaf fall
SuDSPod	Remove litter, weeds and dead plant material; check that the downpipe inlet, outlet and overflow are clear.	Every 3 months, and after heavy rain
SuDSPod	Water the plants in dry spells while they establish; replace failed plants. The soil mix is designed not to need replacing (manufacturer).	As needed; check annually
Existing drain and non-return valve	Inspect the connection and the valve flap; clear any debris.	Annually

6.10 No new foul drainage is shown on the architect's plans. If a WC or basin is added in the extension, it will connect to the existing foul drainage under the Building Regulations.

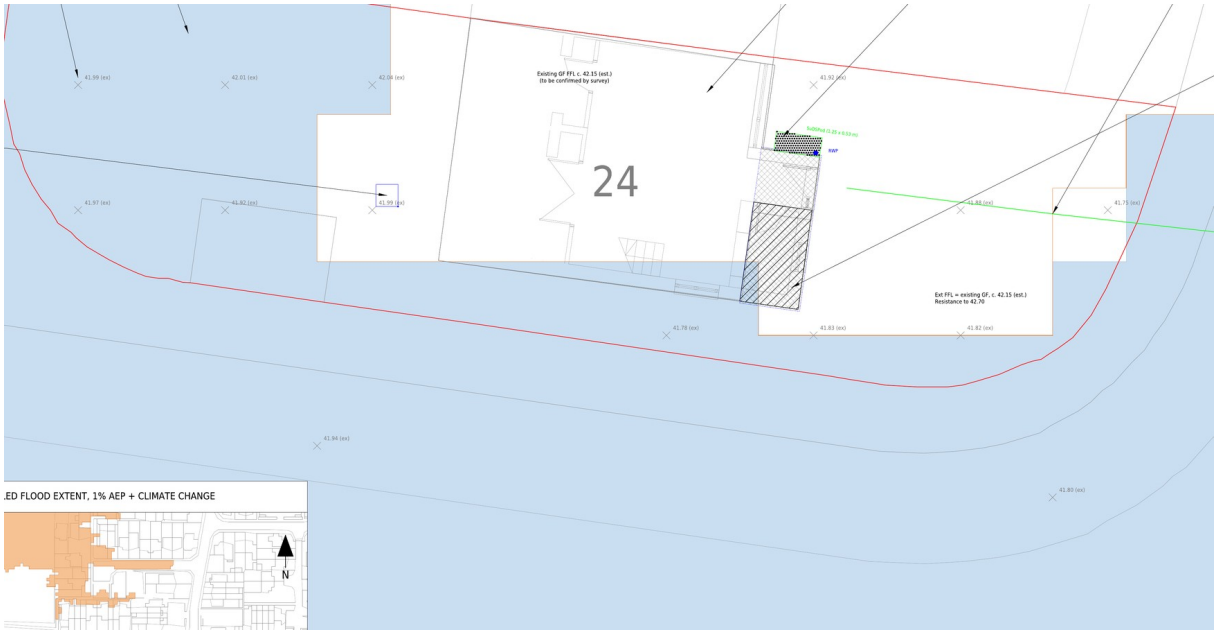

Figure 6.1 Flood risk and surface water drainage layout (extract from drawing 1001 P1) Source: FRE

7 Flood mitigation

Floor levels

7.1 The estimated flood level is 42.10 m AOD (Section 4). The existing ground floor has been estimated from the architect's photograph of the front door (drawing M1001, Figure 7.1). Measured against the 75 mm brick courses, the top of the door sill is about 0.22 m above the paving at the wall, which the LiDAR puts at about 41.95 m AOD. The existing ground floor is therefore about **42.15 m AOD**, just above the estimated flood level.



Figure 7.1 Front door threshold: estimate of the existing ground floor level Source: Architect's photograph 2, drawing A0057-PHA-XX-XX-DR-A-M1001; levels from Environment Agency LiDAR, annotated by FRE

7.2 The standing advice recommends floor levels at least 600 mm above the estimated flood level, 42.70 m AOD. Setting the extension floor at that level would put it about 0.55 m above the rest of the ground floor, which is not practicable for a small extension opening off the existing entrance, and the SFRA (8.2.5) advises that existing floor levels should not be lowered.

7.3 The extension floor will therefore be set to match the existing ground floor, at about 42.15 m AOD, and never lower. In line with the standing advice, flood resistance and resilience measures will protect the extension to at least **42.70 m AOD**, 600 mm above the estimated flood level and about 0.55 m above the floor. The existing ground floor level will be confirmed by survey before detailed design; the protection level of 42.70 m AOD applies whatever the surveyed level.

7.4 The converted garage is in Flood Zone 1, outside the flood outlines. Its new floor will be no lower than the existing ground floor, raising the garage slab where it is lower, and the same resilient finishes will be used where practicable.

Flood resistance and resilience measures

7.5 The measures in Table 7.1 follow the CIRIA Code of Practice for Property Flood Resilience, which the standing advice refers to. They give priority to keeping water out and speeding recovery if it gets in.

Table 7.1 Flood resistance and resilience measures

Element	Measure
Extension walls	Masonry in cement-based mortar with no openings below 42.70 m AOD; window sill above 42.70 m AOD; damp-proof course linked to the floor membrane; water-resistant insulation (closed-cell or similar).
Extension floor	Ground-bearing concrete slab with a continuous damp-proof membrane, set at the existing ground floor level; tiled or other water-resistant finish; no timber floor.
Vents and penetrations	No air bricks or vents below 42.70 m AOD, or self-closing flood air bricks where ventilation is needed; service entries sealed.
Internal finishes	Cement-based render or plaster, or water-resistant board, up to 42.70 m AOD; uPVC skirting; water-resistant joinery and fittings at low level.
Electrics	Sockets and switches at least 1 m above floor level, the highest practical height; consumer unit as high as possible; cables dropped from above.
Garage conversion	Brickwork infill to the former garage door opening built to the same standard, with the window sill above 42.70 m AOD where practicable; floor and finishes as above.
Drainage	Non-return valve on the SuDSPod outlet connection to the existing drain; one is also recommended on the existing private drains.
External levels	Ground kept falling away from the house and the extension, at least 150 mm below the floor.

7.6 There is no new external door in the extension. If the front door is replaced in future, a flood-resistant doorset tested to BS 851188-1, to 600 mm above the floor, would extend the same protection to the house.

8 Flood warning and emergency planning

8.1 The site is not in a flood warning or flood alert area (Section 4). The occupants are advised to register with the Environment Agency's Floodline service for the nearest areas (River Loddon at Lower Earley and Sindlesham; Lower River Loddon) for awareness, and to keep government emergency alerts enabled on their phones, which also cover reservoir emergencies.

8.2 Access to the house is unchanged. The front door and porch are in Flood Zone 1, about 2.5 m from the Flood Zone 2 outline, as is most of the driveway; Flood Zone 2 covers a strip along its southern edge. The estate road in front is mainly in Flood Zone 1, with Flood Zone 2 at its southern end, and joins The Delph about 20 m to the north, where the Flood Map for Planning shows Flood Zone 3. In the Environment Agency's modelled 1% AEP plus climate change flood (Product 4, Figure 4.2) the house, driveway, estate road and junction are all dry; the nearest modelled flooding is on The Delph about 40 m north-west of the site, and the route east along The Delph is outside the modelled extent. Safe, dry access is therefore available in the design flood. In a more extreme event, the occupants can remain safely in the house, with the first floor above any flood level, until any water on the roads has receded. The proposal does not increase the number of occupants.

8.3 The occupants are advised to keep a household flood plan with the measures in Section 7, to know how to isolate the electricity and gas supplies, and to keep valuables and important documents above the ground floor.

9 Site-specific flood risk assessment checklist

9.1 Table 9.1 cross-refers this FRA to the site-specific flood risk assessment checklist in the Planning Practice Guidance (paragraph 080).

Table 9.1 Planning Practice Guidance FRA checklist

Checklist section	Where addressed
1 - Development site and location	Section 2; Figures 2.1 to 2.4
2 - Development proposals	Section 1; Appendix D. Lifetime of at least 100 years (residential), Section 4
3 - Sequential test	Section 5: not required for householder development
4 - Climate change	Sections 3 and 4: Flood Zones plus climate change outline (2070 to 2125); address-level likelihood to 2036-2069
5 - Site specific flood risk	Section 4, including the Product 4 modelled 1% AEP plus climate change extent (Figure 4.2) and the estimated flood level of 42.10 m AOD
6. Surface water management	Section 6; drawing 1001
7. Occupants and users of the development	Sections 7 and 8: no increase in occupants; floor level, resistance and resilience; refuge
8. Exception test	Section 5: not required
9. Residual risk	Sections 4 and 8: reservoir failure and flooding above the estimated level
10. Flood risk assessment credentials	Antony Riozzi, Director, Flood Risk Environmental; 28 October 2026

10 Conclusions and recommendations

Conclusions

- The site is at low risk of flooding from rivers. Flood Zone 2 covers 44% of the plot, mainly the rear garden; the house, porch, garage and most of the frontage are in Flood Zone 1 apart from strips along the south wall and the southern boundary, and there is no Flood Zone 3 on the site. The Environment Agency Product 4 modelled 1% AEP plus climate change extent does not reach the site (nearest about 40 m), and the address has a very low chance of flooding to 20 cm, now and to 2036-2069.
- The risk from surface water is very low and from groundwater and sewers low. There is a residual risk from Maiden Erlegh Lake, a regulated reservoir.
- The proposal is householder development: the sequential and exception tests do not apply.
- The estimated 1% AEP plus climate change flood level is 42.10 m AOD. The extension floor will match the existing ground floor, estimated at about 42.15 m AOD, with flood resistance and resilience measures to at least 42.70 m AOD, 600 mm above the estimated flood level, as the standing advice requires.
- Only the south-west corner of the extension, about 0.5 m², is at the edge of the Flood Zone 2 outline, displacing about 0.1 m³ in the design flood. The proposal will not increase flood risk elsewhere.
- Roof water from the new roof over the extension and porch passes through a SuDSPod planter before the existing surface water drain. Modelled in Causeway Flow with FEH22 rainfall, it holds the 1% AEP plus 40% climate change storm without flooding and cuts the peak flow to the drain to about 0.2 l/s. Maintained by the homeowner.
- Access is unchanged and dry in the modelled design flood, and the first floor provides refuge. The development will be safe for its lifetime without increasing flood risk elsewhere, in accordance with NPPF policy F7, MDD Local Plan Policies CC09 and CC10, and Core Strategy Policy CP1.

Recommendations before detailed design

- Confirm the existing ground floor level by survey, and set the extension and converted garage floors to match it.
- Incorporate the flood resistance and resilience measures in Table 7.1 into the Building Regulations design.
- Confirm the position and depth of the existing surface water drain at the porch downpipe, and fit a non-return valve on the SuDSPod outlet connection.
- Register with Floodline and keep emergency alerts enabled (Section 8).

11 References

British Geological Survey. Geology 1:50,000 (DiGMapGB-50), sheet E268 Reading. Accessed 27 October 2026.

CIRIA. Code of Practice for Property Flood Resilience.

CIRIA (2015). The SuDS Manual (C753), Chapters 18 (bioretention systems) and 32 (operation and maintenance).

Environment Agency (2026). Flood risk assessment data (Product 4), EIR2026/49074, customer reference K3VC8CTF32DR, 26 October 2026.

Environment Agency. Flood Map for Planning (flood zones, flood zones plus climate change, surface water). Accessed 27 October 2026.

Environment Agency. Check your long term flood risk: 24 The Delph, Lower Earley, Reading RG6 3AN. Accessed 27 October 2026.

Environment Agency. Risk of flooding from rivers and sea (NaFRA2), flood warning and alert areas, recorded flood outlines, historic flood map and reservoir flood extents (Defra Data Services Platform). Accessed 27 October 2026.

Environment Agency (2026). Preparing a flood risk assessment: standing advice. Updated 28 May 2026. gov.uk.

Environment Agency (2022). Flood risk assessments: climate change allowances. Updated 27 May 2022. gov.uk.

Environment Agency (2022). Peak rainfall climate change allowances by management catchment. Version 21 March 2022. gov.uk.

Environment Agency. LiDAR Composite Digital Terrain Model, 1 m; dataset metadata, data.gov.uk (vertical accuracy +/-15 cm RMSE).

Flood Risk Environmental (2026). SuDSPod surface water calculations, Causeway Flow+ version 16.0, FEH22 rainfall (sudspod front.pfd), 28 October 2026 (Appendix E).

GreenBlue Urban (2024). SuDSPod data sheet, On plot attenuation (24DataSuDS-0044.1); SuDSPod downpipe kit data sheet (24DataSuDS-0040.1); SuDSPod quick start guide; SuDSPod frequently asked questions. Accessed 28 October 2026.

HM Government (2015). The Building Regulations 2010, Approved Document H: Drainage and waste disposal, 2015 edition.

JBA Consulting for Wokingham Borough Council (2023). Wokingham Borough Council Level 1 Strategic Flood Risk Assessment, Final Report, May 2023, and Appendix F, Cumulative Impact Assessment.

JBA Consulting for Wokingham Borough Council (2024). Wokingham Section 19 Flood Investigation, Final Report, November 2024 (flooding of 31 March 2023).

Ministry of Housing, Communities and Local Government (2026). National Planning Policy Framework. Published 17 August 2026, updated 29 September 2026. Policies F4 to F8; Annexes C and F.

Ministry of Housing, Communities and Local Government. Planning Practice Guidance: Flood risk and coastal change, paragraphs 006, 021, 051, 056 and 080. Updated 17 September 2025.

Postlethwaite Hill Architects (2026). Drawings A0057-PHA-XX-XX-DR-A-P0001 Rev 2 Plans & Elevations Existing & Proposed; P0003 Rev 1 Existing Site Plan; M1001 Rev 2 Existing Photographs.

Wokingham Borough Council (2010). Core Strategy Development Plan Document, Policies CP1 and CP3.

Wokingham Borough Council (2014). Managing Development Delivery Local Plan, Policies CC09 and CC10.

Wokingham Borough Council (2024). Local Plan Update, Proposed Submission (Regulation 19), Policies FD1 and FD2; examination ongoing.

Wokingham Borough Council (2025). Local Validation List, September 2025.

Wokingham Borough Council (2025). Pre-application advice response 252471, 24 The Delph, 20 October 2025.

Wokingham Borough Council (2016). Sustainable Drainage Systems (SuDS) Strategy.

Appendix A

Flood risk and drainage drawing

FRE-DELPH-2026, P1, A2:

1001 Flood Risk and Surface Water Drainage - Layout

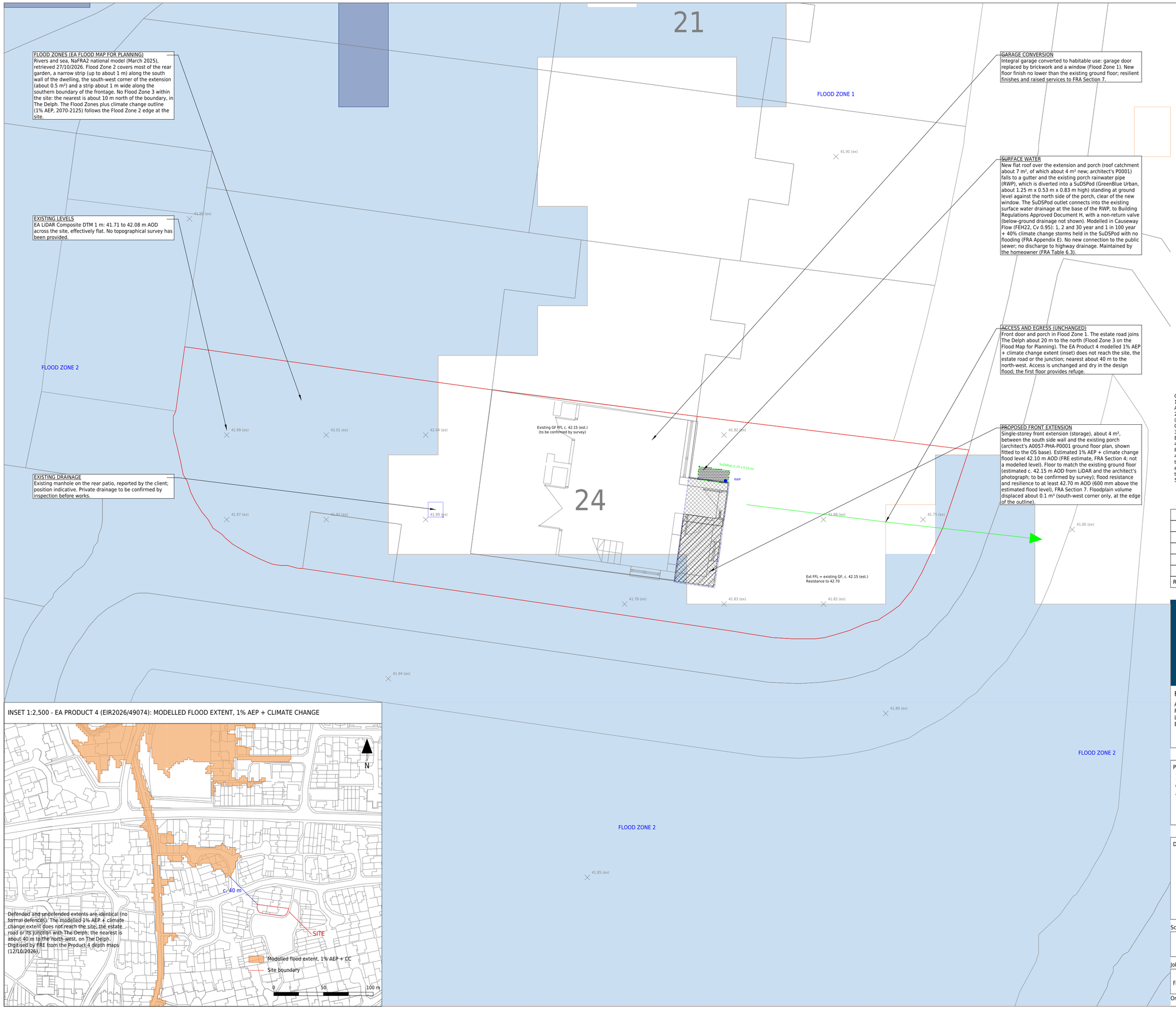

FLOOD ZONES (EA FLOOD MAP FOR PLANNING)
Rivers and sea, NaFRA2 national model (March 2025), retrieved 27/10/2026. Flood Zone 2 covers most of the rear garden, a narrow strip (up to about 1 m) along the south wall of the dwelling, the south-west corner of the extension (about 0.5 m²) and a strip about 1 m wide along the southern boundary of the frontage. No Flood Zone 3 within the site: the nearest is about 10 m north of the boundary, in The Delph. The Flood Zones plus climate change outline (1% AEP, 2070-2125) follows the Flood Zone 2 edge at the site.

EXISTING LEVELS
EA LiDAR Composite DTM 1 m: 41.71 to 42.08 m AOD across the site, effectively flat. No topographical survey has been provided.

EXISTING DRAINAGE
Existing manhole on the rear patio, reported by the client; position indicative. Private drainage to be confirmed by inspection before works.

GARAGE CONVERSION
Integral garage converted to habitable use: garage door replaced by brickwork and a window (Flood Zone 1). New floor finish no lower than the existing ground floor; resilient finishes and raised services to FRA Section 7.

SURFACE WATER
New flat roof over the extension and porch (roof catchment about 7 m², of which about 4 m² new; architect's P0001) falls to a gutter and the existing porch rainwater pipe (RWP), which is diverted into a SuDSPod (GreenBlue Urban, about 1.25 m x 0.53 m x 0.83 m high) standing at ground level against the north side of the porch, clear of the new window. The SuDSPod outlet connects into the existing surface water drainage at the base of the RWP, to Building Regulations Approved Document H, with a non-return valve (below-ground drainage not shown). Modelled in Causeway Flow (FEH22, Cv 0.95): 1, 2 and 30 year and 1 in 100 year + 40% climate change storms held in the SuDSPod with no flooding (FRA Appendix E). No new connection to the public sewer; no discharge to highway drainage. Maintained by the homeowner (FRA Table 6.3).

ACCESS AND EGRESS (UNCHANGED)
Front door and porch in Flood Zone 1. The estate road joins The Delph about 20 m to the north (Flood Zone 3 on the Flood Map for Planning). The EA Product 4 modelled 1% AEP + climate change extent (inset) does not reach the site, the estate road or the junction; nearest about 40 m to the north-west. Access is unchanged and dry in the design flood; the first floor provides refuge.

PROPOSED FRONT EXTENSION
Single-storey front extension (storage), about 4 m², between the south side wall and the existing porch (architect's A0057-PHA-P0001 ground floor plan, shown fitted to the OS base). Estimated 1% AEP + climate change flood level 42.10 m AOD (FRE estimate, FRA Section 4; not a modelled level). Floor to match the existing ground floor (estimated c. 42.15 m AOD from LiDAR and the architect's photograph; to be confirmed by survey); flood resistance and resilience to at least 42.70 m AOD (600 mm above the estimated flood level), FRA Section 7. Floodplain volume displaced about 0.1 m³ (south-west corner only, at the edge of the outline).

Key:

- Site boundary (architect red line, georeferenced to OS)
- Existing dwelling, No. 24 (incl. garage to be converted)
- Proposed single-storey front extension
- EA Flood Zone 2 (0.1% to 1% annual chance, rivers)
- EA Flood Zone 3 (1% or greater annual chance, rivers)
- EA Flood Zones plus climate change outline (2070-2125)
- 41.92 (ex) — Existing ground level, EA LiDAR 1 m DTM (m AOD)
- Existing porch rainwater pipe (RWP), diverted into the SuDSPod
- Proposed SuDSPod (GreenBlue Urban) at ground level
- Roof catchment draining to the SuDSPod (new roof over extension and porch)
- Architect's proposed ground floor plan (P0001), fitted to the OS base
- Existing drainage / manhole (position indicative)
- Access and egress route (unchanged)
- FFL — Finished floor level tag
- EA Product 4 modelled flood extent, 1% AEP + climate change (EIR2026/49074; inset 1:2,500)

GENERAL NOTES
1. Planning-stage flood risk and surface water layout to accompany the Flood Risk Assessment FRE-DELPH-2026 v1.0. For planning purposes only - not for construction.
2. Base: architect's site plan A0057-PHA-XX-XX-DR-A-P0003 and block plan P0001 (Postlethwaite Hill Architects), fitted to the OS National Grid. Levels: EA LiDAR Composite DTM 1 m, m AOD. No topographical survey.
3. Flood zones: EA Flood Map for Planning (rivers and sea, NaFRA2 national model), EA data in British National Grid (EPSG:27700), retrieved 27/10/2026. Inset: EA Product 4 EIR2026/49074 modelled 1% AEP + climate change extent, digitised from the Product 4 depth maps.
4. Estimated 1% AEP + climate change flood level 42.10 m AOD (FRE estimate from the EA outline and LiDAR; not a modelled design level). Extension floor to match the existing ground floor (estimated c. 42.15 m AOD), with flood resistance and resilience to at least 42.70 m AOD (FRA Section 7).
5. Existing drainage positions are indicative and are to be confirmed on site.

0 1 2 3 4 5 m — Scale 1:100 at A2

INSET 1:2,500 - EA PRODUCT 4 (EIR2026/49074): MODELLED FLOOD EXTENT, 1% AEP + CLIMATE CHANGE

Defended and undefended extents are identical (no formal defences). The modelled 1% AEP + climate change extent does not reach the site; the estate road or its junction with The Delph; the nearest is about 40 m to the north-west, on The Delph. Digitised by FRE from the Product 4 depth maps (12/10/2026).

Rev.	Description	Drawn	Date
P1	First issue - for planning	AR	28.10.26

FLOOD RISK ENVIRONMENTAL
ASSESS. ADVISE. PROTECT.

Flood Risk Environmental
A trading style of Charnwood Property Trading Ltd, Co. 12219010
Registered office: 1 Morgans Orchard, Nottingham Road, Barrow Upon Soar, LE12 8HZ
Email: Floodriskenvironmental@gmail.com Tel: 07826 705389

Project Title
24 The Delph, Lower Earley, Wokingham RG6 3AN
Garage conversion and single-storey front extension - householder application (Wokingham BC)

Drawing Title
Flood Risk and Surface Water Drainage - Layout

Scale	Drawn By	Designer Check	Engineer Check
1:100	AR	AR	
	Date 28.10.26	Date 28.10.26	Date

Job No.	Drawing No.	Revision
FRE-DELPH-2026	1001	P1

Original Sheet Size A2 | Sheet 1 of 1

Appendix B

Environment Agency flood risk assessment data

Product 4, EIR2026/49074, customer reference K3VC8CTF32DR

Environment Agency response letter, 26 October 2026

Flood risk assessment data (NaFRA2 national model), 12 October 2026

Environment Agency

For homes and habitats

Antony Riozzi

floodriskenvironmental@gmail.com

Our ref: EIR2026/49074
Your ref:
Date: 26 October 2026

Dear Antony Riozzi,

RE: Environmental Information Regulations: EIR2026/49074

Thank you for your request for information regarding Flood risk assessment data (product 4). Reference K3VC8CTF32DR - RG6 3AW, which we received on 12 October 2026.

We respond to requests for information that we hold under the Environmental Information Regulations 2004 (EIR). The Regulations requires that we respond to requests by advising you whether information is held or not, and if so by providing you with that information.

Information provided

Please find attached the requested data (referred to as product 4).

Provision of National Flood Risk Assessment 2 (NaFRA2) rivers and sea banded depth data for: RG6 3AW

The Flood Map for Planning in this location is based on the new national model published in March 2025. The NaFRA2 rivers and sea banded dataset included in this product 4 is from the new national model.

Developers using Environment Agency data will need to assess whether it is appropriate for their intended use. This includes any data displayed on the Flood Map for Planning, downloaded from Defra Data Services Platform, or provided through requests for information.

When producing a Flood Risk Assessment (FRA), additional detailed modelling may be required depending on the scale, nature and location of the proposed

development. This is more likely if a development is sensitive to flood risk, if there are gaps or low confidence in existing evidence; or where new evidence suggests flood risks differ to currently available information. Developers should refer to the Government's guidance on Using modelling for flood risk assessments, Flood risk assessments: applying for planning permission and the Planning Portal guidance on Understanding and assessing flood risk. Where new hydraulic models are developed to support an FRA, the Environment Agency may request a review these to ensure it is fit for purpose.

An FRA may be able to demonstrate that Environment Agency flood risk data is conservative, through the use of site-specific evidence, such as updated topographical data. In some circumstances, where it is appropriate given the scale, nature and location, this evidence may be sufficient to derive flood levels without the need for further modelling. If customers are using the banded flood depth information for rivers and sea to design mitigation measures in development, it should be assumed that the flood depths are the maximum of the relevant band, and account for uncertainty using a freeboard. It may also be necessary to convert the depth into a flood level by comparing it to relevant land levels. The responsibility rests with the developer to provide sufficient evidence to support the conclusions of the FRA. Depending on the circumstances, this may include the preparation of new hydraulic modelling.

Flood Risk Assessment's should be completed by a suitably competent and qualified person.

You may be interested in the following guidance / information publicly available:

- **'Planning Practice Guidance'** - provides information about planning considerations in areas at risk of flooding. https://www.gov.uk/government/collections/planning-practice-guidance
- **'Planning applications: assessing flood risk'** - information about completing Flood Risk Assessments. https://www.gov.uk/guidance/flood-risk-assessment-for-planning-applications
- **'Site specific flood risk assessment: Checklist'** – a checklist to help ensure you have considered all the relevant factors in your flood risk

assessment. https://www.gov.uk/guidance/flood-risk-and-coastal-change#Site-Specific-Flood-Risk-Assessment-checklist-section

- **'Using modelling for flood risk assessments'** – provides information regarding the use of modelling in flood risk assessments when applying for planning permission. https://www.gov.uk/guidance/using-modelling-for-flood-risk-assessments

Please note that our historic flood event maps may not be comprehensive. We would therefore advise that you make further enquiries locally with specific reference to flooding at your location. You should consider contacting the relevant Local Planning Authority and/or water/sewerage undertaker for the area.

Please be aware that flooding can come from different sources. Examples of these are:

- from rivers or the sea
- surface water (i.e. rainwater flowing over or accumulating on the ground before it is able to enter rivers or the drainage system)
- overflowing or backing up of sewer or drainage systems which have been overwhelmed
- groundwater rising up from underground aquifers

You can find recorded flood outlines for this location via the link below:
https://data.gov.uk/dataset/recorded-flood-outlines1

You can find the historic flood map for this location via the link below:
https://data.gov.uk/dataset/historic-flood-map1

You can access the Flood Map for Planning service to view and export maps for your site at:
Flood map for planning - GOV.UK

Please be aware that from 20th July 2021 the climate change allowances required in flood risk assessments have been updated. Please see

https://www.gov.uk/guidance/flood-risk-assessments-climate-change-allowances#contents for more information.

Please refer to the table below for the permitted use of the supplied information.

Name	Product 4
Description	NaFRA2 rivers and sea banded depth data for: RG6 3AW
Licence	Open Government Licence
Information Warning - OS background mapping	*The mapping of features provided as a background in this product is © Ordnance Survey. It is provided to give context to this product. The Open Government Licence does not apply to this background mapping. You are granted a non-exclusive, royalty free, revocable licence solely to view the Licensed Data for non-commercial purposes for the period during which the Environment Agency makes it available. You are not permitted to copy, sub-license, distribute, sell or otherwise make available the Licensed Data to third parties in any form. Third party rights to enforce the terms of this licence shall be reserved to OS.*
Attribution	Contains Environment Agency information © Environment Agency and/or database rights. Contains Ordnance Survey data © Crown copyright 2017 Ordnance Survey 100024198.

It should be noted that the extents of our modelling may not reach your site and may have been provided for access and egress purposes.

Please refer to our Open Government Licence for the permitted use of the supplied data: http://www.nationalarchives.gov.uk/doc/open-government-licence/version/3/

Rights of appeal

Environment Agency

For homes and habitats

If you are not satisfied with our decision, you can contact us within two calendar months to ask for the decision to be reviewed. We will then conduct an internal review of our response to your request and give you our decision in writing within 40 working days.

If you are not satisfied with the outcome of the internal review, you can then make an appeal to the Information Commissioner Office, the statutory regulator for the Environmental Information Regulations 2004 and the Freedom of Information Act 2000. Please follow this link to the ICO online complaints portal. The address is: Information Commissioner's Office, Wycliffe House, Water Lane, Wilmslow, Cheshire. SK9 5AF.

Tel: 0303 123 1113 (local rate) or 01625 545 745 (national rate) | Fax: 01625 524 510 Email: icocasework@ico.org.uk | Website: www.ico.org.uk

Yours sincerely,
THM Thames West Mapping & Data

Flood risk assessment data

Location of site: 475893/170821 (shown as easting and northing coordinates)
Document created on: 12 October 2026
This information was previously known as a product 4.
Customer reference number: K3VC8CTF32DR

Map showing the location that flood risk assessment data has been requested for.

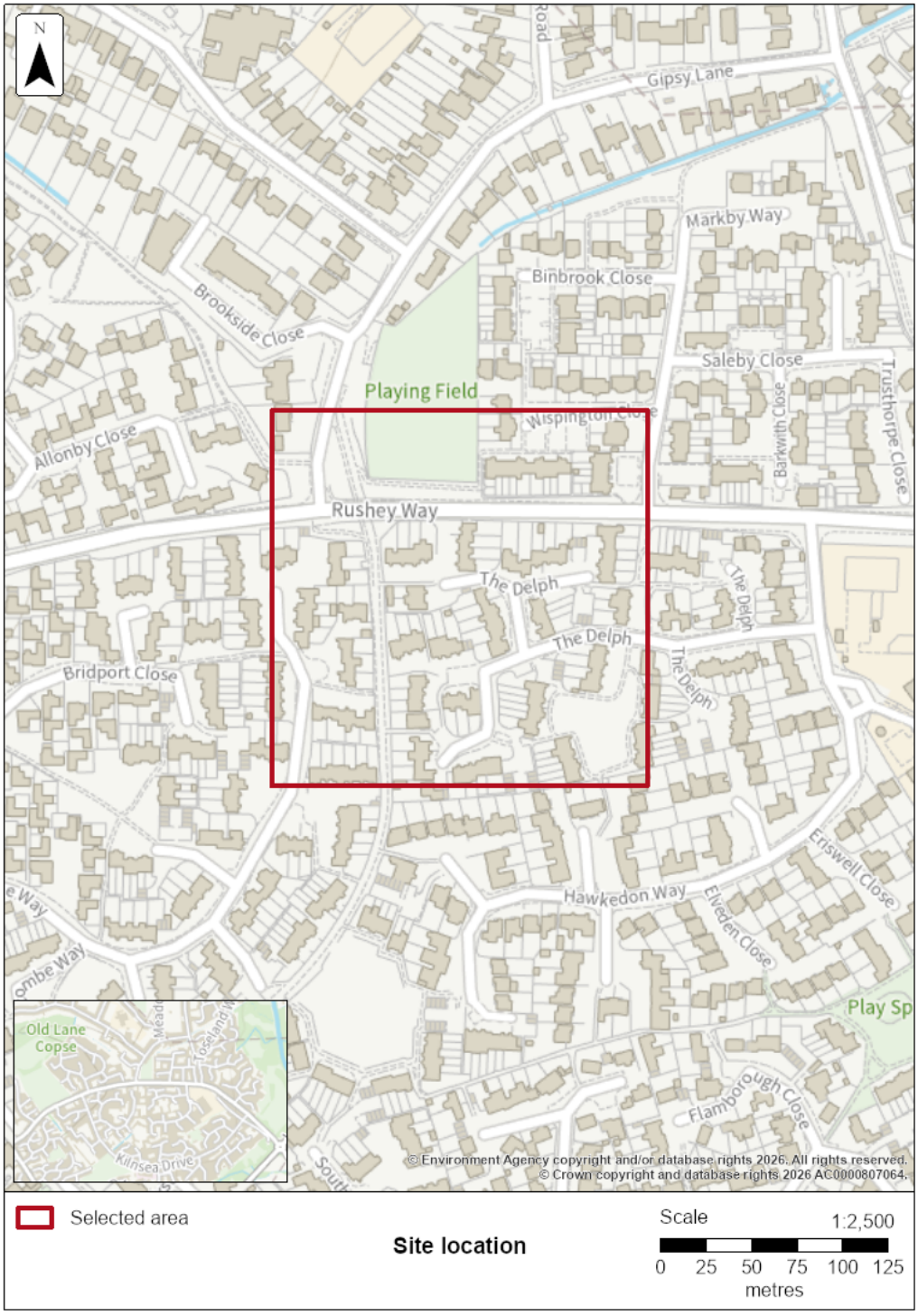

How to use this information

You can use this information as part of a flood risk assessment for a planning application. To do this, you should include it in the appendix of your flood risk assessment.

> **We recommend that you work with a flood risk consultant to get your flood risk assessment.**

Included in this document

In this document you'll find:

- how to find information about other sources of flooding
- information on the models used
- definitions for the terminology used throughout
- flood map for planning (rivers and the sea)
- past floods
- modelled data
- modelled climate change data
- rivers and sea flood risk depth band datasets
- information about strategic flood risk assessments
- information about this data
- information about flood risk activity permits
- help and advice

Information that's unavailable

This document **does not** contain:

- flood defence locations and attributes

We aren't able to display flood defence locations and attributes as there are no formal flood defences in the area of interest.

Other sources of flooding

To find out about other factors that might affect the flood risk of this location, you should check:

- reservoir flood risk
- groundwater flood risk - you could use the British Geological Survey groundwater flooding data, groundwater: current status and flood risk and the guide on mining and groundwater constraints for development - further information may be available from the lead local flood authority (LLFA)
- your local planning authority's strategic flood risk assessment (SFRA), which includes future flood risk

Your lead local flood authority is Wokingham.

For information about sewer flooding, contact the relevant water company for the area.

Terminology used

Annual exceedance probability (AEP)

This refers to the probability of a flood event occurring in any year. The probability is expressed as a percentage. For example, a large flood which is calculated to have a 1% chance of occuring in any one year, is described as 1% AEP.

Metres above ordnance datum (mAOD)

All flood levels are given in metres above ordnance datum which is defined as the mean sea level at Newlyn, Cornwall.

Flood map for planning (rivers and the sea)

Your selected location is in flood zone 3.

Flood zone 3 shows the area at risk of flooding for an undefended flood event with a:

- 0.5% or greater probability of occurring in any year for flooding from the sea
- 1% or greater probability of occurring in any year for fluvial (river) flooding

Flood zone 2 shows the area at risk of flooding for an undefended flood event with:

- between a 0.1% and 0.5% probability of occurring in any year for flooding from the sea
- between a 0.1% and 1% probability of occurring in any year for fluvial (river) flooding

It's important to remember that the flood zones on this map:

- refer to the land at risk of flooding and do not refer to individual properties
- refer to the probability of river and sea flooding, ignoring the presence of defences
- do not take into account potential impacts of climate change

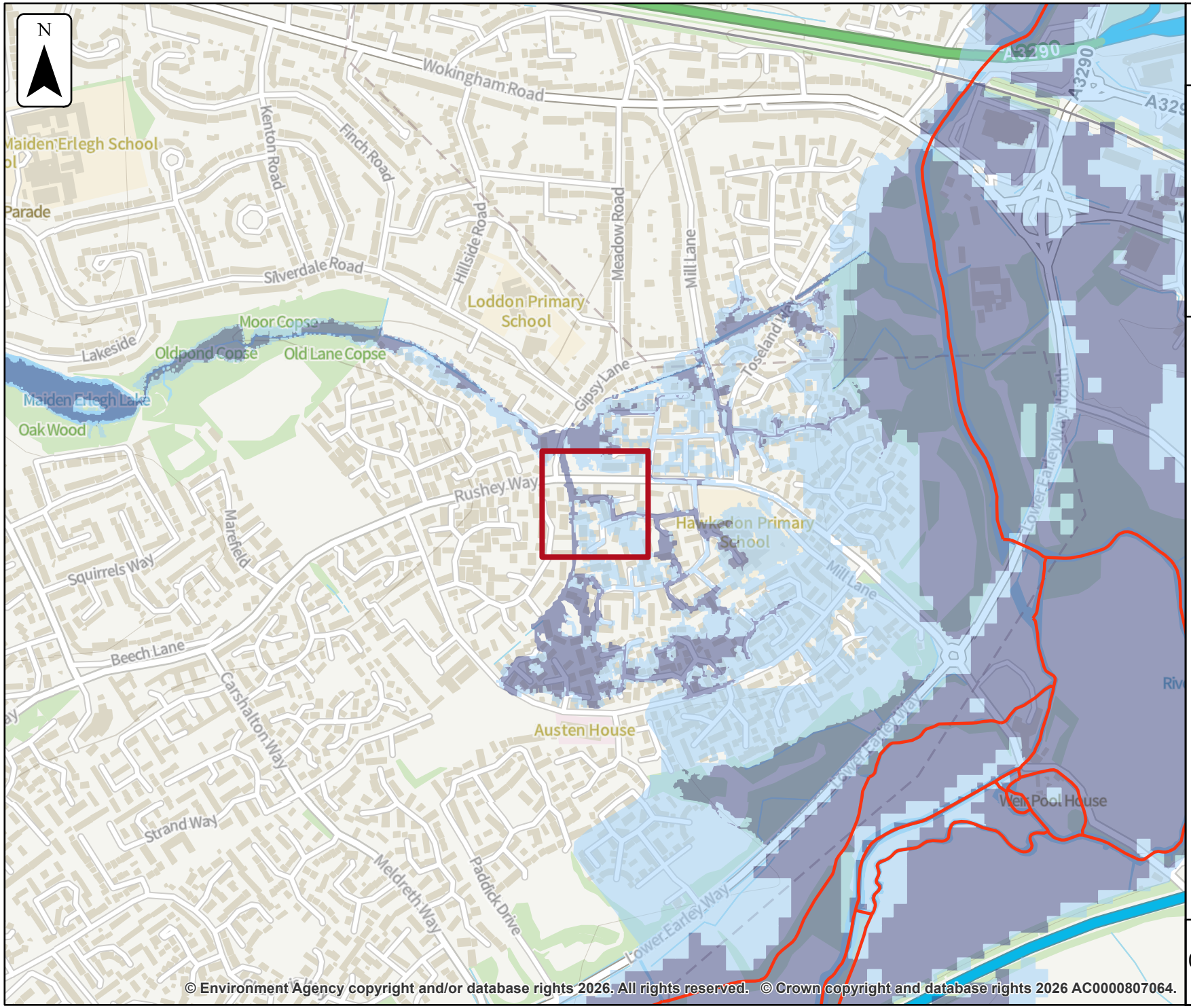

© Environment Agency copyright and/or database rights 2026. All rights reserved. © Crown copyright and database rights 2026 AC0000807064.

Past floods

Past flood events included in this document

The recorded flood outlines included in this document are for areas of land local to your site location that have been flooded by any of these sources:

- ephemeral water
- main rivers
- ordinary watercourses
- the sea
- unknown

Data limitations

The outlines do not include flooding from:

- drainage where rainfall has led to surface water ponding or overland runoff
- artificial, water-bearing sewer, water supply and wastewater treatment pipelines

Changes to flood defences

The defences (also known as assets) that were in place may also have changed. For example, assets may have been built more recently than the last recorded flood outline.

What the recorded flood outlines dataset is

The recorded flood outlines are a geographical information system (GIS) data layer that show our verified records of areas that have flooded in the past from:

- rivers
- the sea
- groundwater
- surface water

Download the complete recorded flood outlines dataset, which includes data quality flags for outlines recorded after April 2020. This indicates the confidence we have in an outline.

Get flood information from other organisations

Contact Wokingham Lead Local Flood Authority (LLFA) and your drainage board to get information about past flooding caused by surface water or drainage systems.

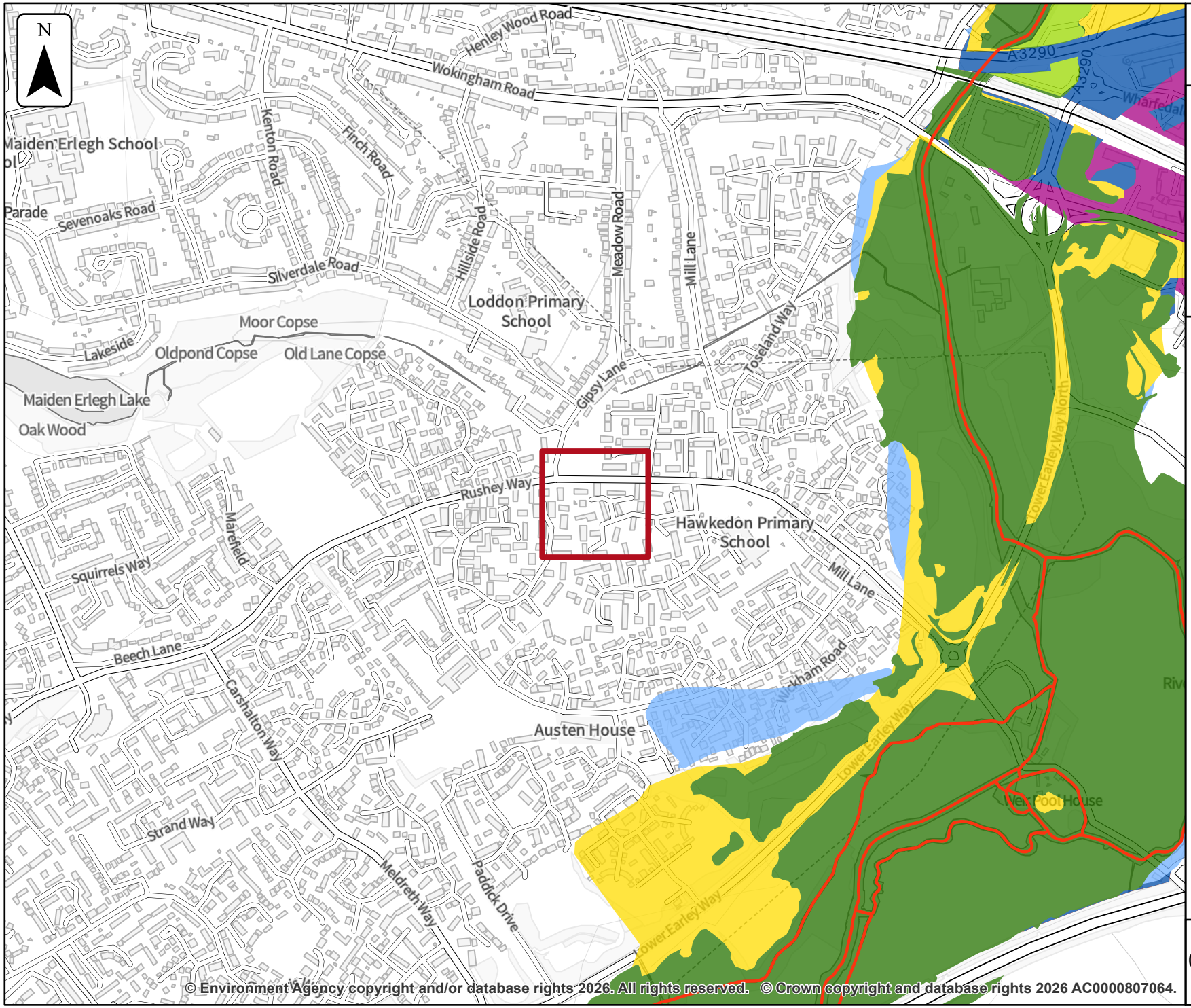

Environment Agency

Past floods

Location (easting/northing)
475893/170821

Scale
1:10,000

Created
12 Oct 2026

- Selected area
- Main river

Date of flood event

- February, 2009
- July, 2007
- 1991
- 1990
- 1981
- 1974
- 1968
- 1947

0 100 200 300 400 500
metres

Data on past flood events

Start date	End date	Source of flood	Cause of flood	Affects location
9 February 2009	12 February 2009	main river	channel capacity exceeded (no raised defences)	No
20 July 2007	21 July 2007	main river	channel capacity exceeded (no raised defences)	No
1991	1991	main river	channel capacity exceeded (no raised defences)	No
1990	1990	main river	channel capacity exceeded (no raised defences)	No
1981	1981	main river	channel capacity exceeded (no raised defences)	No
1974	1974	main river	channel capacity exceeded (no raised defences)	No
1968	1968	main river	channel capacity exceeded (no raised defences)	No
1947	1947	main river	channel capacity exceeded (no raised defences)	No

NaFRA2 rivers and sea banded datasets

Rivers and sea flood risk depth band datasets show present day and climate change scenarios for:

- undefended: 0.1% AEP (1 in 1,000) rivers and sea
- undefended: 1% AEP (1 in 100) rivers and 0.5% AEP (1 in 200) sea
- defended: 0.1% AEP (1 in 1,000) rivers and sea
- defended: 1% AEP (1 in 100) rivers and 0.5% AEP (1 in 200) sea
- defended: 3.3% AEP (1 in 30) rivers and sea

The data comes from our National Flood Risk Assessment 2 (NaFRA2) new national model.

Find out more about rivers and the sea flood risk depth band datasets on the Data Services Platform:

- defended and undefended, present day
- defended and undefended, with climate change
- 3.3% AEP (1 in 30) defended, present day
- 3.3% AEP (1 in 30) defended, with climate change

When using depth band information, you should:

- assume flood depths are at the maximum of the relevant band
- convert depth information to an estimated flood level by comparing it against land level information for your site
- use the local model where there is both a local model and depth band information in the same location – check the information is suitable for your intended use

You may need a flood risk specialist to check and calculate flood levels for you.

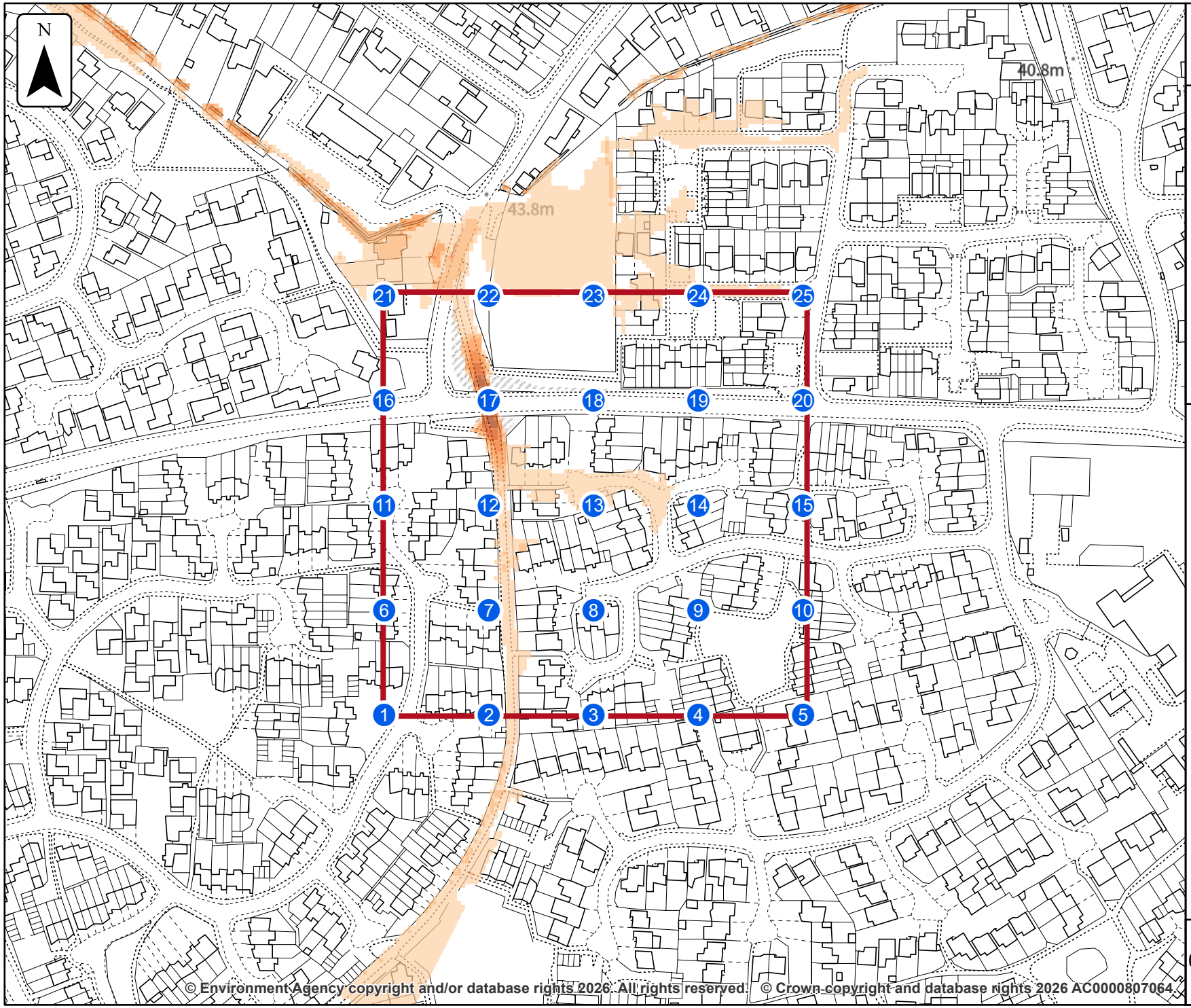

Environment Agency

Defended rivers and sea flood risk depths

Location (easting/northing)
475893/170821

Scale
1:2,500

Created
12 Oct 2026

Model name
NaFRA2 new national model

Selected area

Flood Risk Depths

- >2300mm
- 1200-2300mm
- 900-1200mm
- 600-900mm
- 300-600mm
- 150-300mm
- <150mm

This map shows the 1% AEP rivers and 0.5% AEP sea depth data

0 25 50 75 100 125
metres

© Environment Agency copyright and/or database rights 2026. All rights reserved. © Crown copyright and database rights 2026 AC0000807064.

Sample point data

Defended

Label	Easting	Northing	3.33% AEP		1% AEP rivers and 0.5% AEP sea		0.1% AEP	
			Depth	Flood source	Depth	Flood source	Depth	Flood source
1	475790	170718	NoData	NoData	NoData	NoData	NoData	NoData
2	475841	170718	NoData	NoData	NoData	NoData	NoData	NoData
3	475892	170718	NoData	NoData	NoData	NoData	NoData	NoData
4	475943	170718	NoData	NoData	NoData	NoData	NoData	NoData
5	475994	170718	NoData	NoData	NoData	NoData	NoData	NoData
6	475790	170769	NoData	NoData	NoData	NoData	NoData	NoData
7	475841	170769	NoData	NoData	NoData	NoData	NoData	NoData
8	475892	170769	NoData	NoData	NoData	NoData	NoData	NoData
9	475943	170769	NoData	NoData	NoData	NoData	NoData	NoData
10	475994	170769	NoData	NoData	NoData	NoData	NoData	NoData
11	475790	170820	NoData	NoData	NoData	NoData	NoData	NoData
12	475841	170820	NoData	NoData	NoData	NoData	NoData	NoData

Label	Easting	Northing	3.33% AEP		1% AEP rivers and 0.5% AEP sea		0.1% AEP	
			Depth	Flood source	Depth	Flood source	Depth	Flood source
13	475892	170820	NoData	NoData	NoData	NoData	<150mm	River
14	475943	170820	NoData	NoData	NoData	NoData	NoData	NoData
15	475994	170820	NoData	NoData	NoData	NoData	NoData	NoData
16	475790	170871	NoData	NoData	NoData	NoData	NoData	NoData
17	475841	170871	900-1200mm	River	900-1200mm	River	900-1200mm	River
18	475892	170871	NoData	NoData	NoData	NoData	NoData	NoData
19	475943	170871	NoData	NoData	NoData	NoData	NoData	NoData
20	475994	170871	NoData	NoData	NoData	NoData	NoData	NoData
21	475790	170922	NoData	NoData	<150mm	River	<150mm	River
22	475841	170922	NoData	NoData	NoData	NoData	NoData	NoData
23	475892	170922	NoData	NoData	NoData	NoData	<150mm	River
24	475943	170922	NoData	NoData	NoData	NoData	<150mm	River

Label	Easting	Northing	3.33% AEP		1% AEP rivers and 0.5% AEP sea		0.1% AEP	
			Depth	Flood source	Depth	Flood source	Depth	Flood source
25	475994	170922	NoData	NoData	NoData	NoData	NoData	NoData
Max value in selected area:			1200-2300mm		1200-2300mm		1200-2300mm	

Data in this table comes from the NaFRA2 New National Model. Depth values are shown in millimetres.
Cells which contain text 'NoData' for a scenario show that return period has been modelled but there is no flood risk for that return period at that location.
'Max value in selected area' is the deepest depth band range at any location within your drawn boundary.

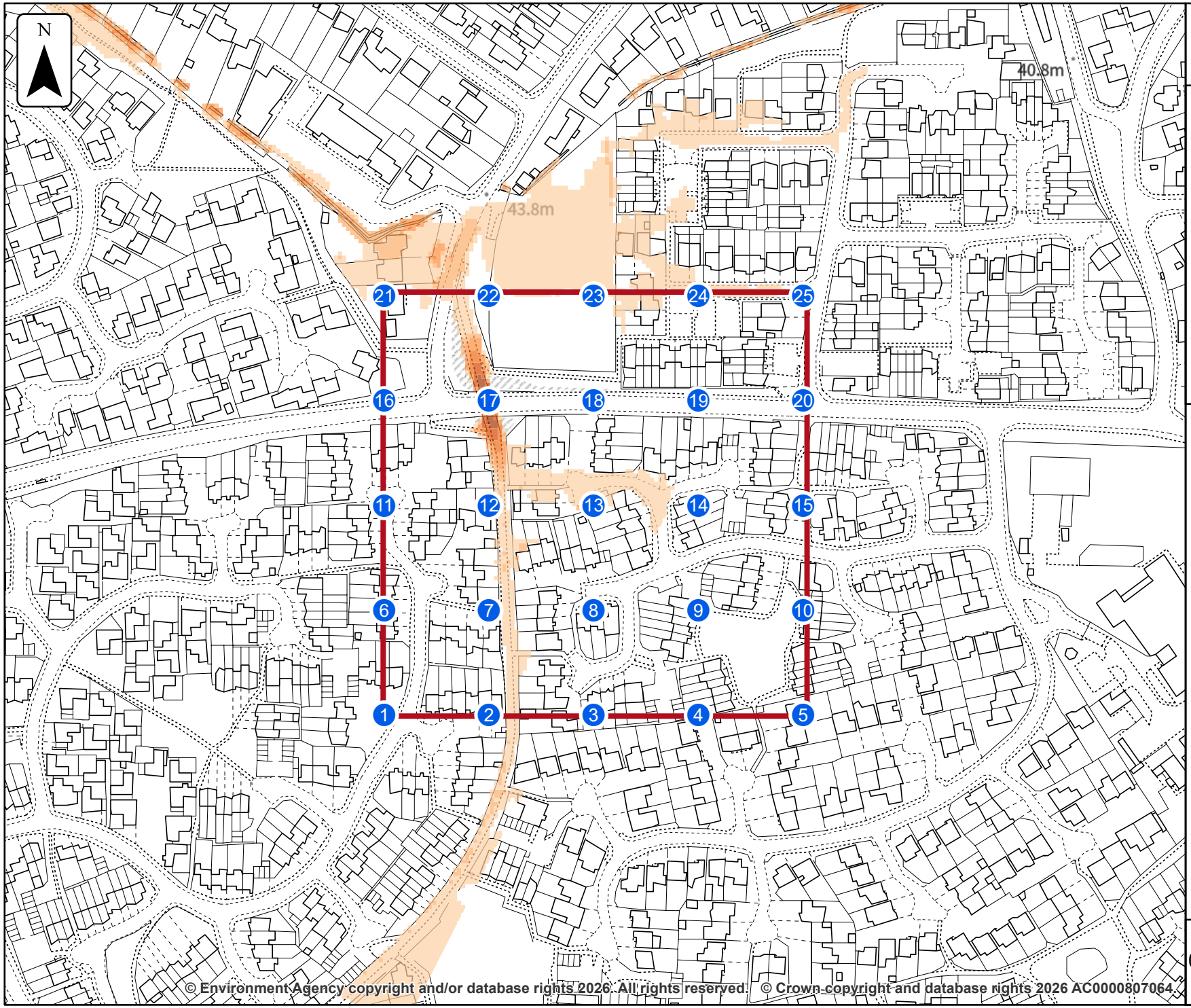

Environment Agency

Undefended rivers and sea flood risk depths

Location (easting/northing)
475893/170821

Scale
1:2,500

Created
12 Oct 2026

Model name
NaFRA2 new national model

Selected area

Flood Risk Depths

- >2300mm
- 1200-2300mm
- 900-1200mm
- 600-900mm
- 300-600mm
- 150-300mm
- <150mm

This map shows the 1% AEP rivers and 0.5% AEP sea depth data

0 25 50 75 100 125
metres

© Environment Agency copyright and/or database rights 2026. All rights reserved. © Crown copyright and database rights 2026 AC0000807064.

Sample point data

Undefended

Label	Easting	Northing	1% AEP rivers and 0.5% AEP sea		0.1% AEP	
			Depth	Flood source	Depth	Flood source
1	475790	170718	NoData	NoData	NoData	NoData
2	475841	170718	NoData	NoData	NoData	NoData
3	475892	170718	NoData	NoData	NoData	NoData
4	475943	170718	NoData	NoData	NoData	NoData
5	475994	170718	NoData	NoData	NoData	NoData
6	475790	170769	NoData	NoData	NoData	NoData
7	475841	170769	NoData	NoData	NoData	NoData
8	475892	170769	NoData	NoData	NoData	NoData
9	475943	170769	NoData	NoData	NoData	NoData
10	475994	170769	NoData	NoData	NoData	NoData
11	475790	170820	NoData	NoData	NoData	NoData
12	475841	170820	NoData	NoData	NoData	NoData

Label	Easting	Northing	1% AEP rivers and 0.5% AEP sea		0.1% AEP	
			Depth	Flood source	Depth	Flood source
13	475892	170820	NoData	NoData	<150mm	River
14	475943	170820	NoData	NoData	NoData	NoData
15	475994	170820	NoData	NoData	NoData	NoData
16	475790	170871	NoData	NoData	NoData	NoData
17	475841	170871	900-1200mm	River	900-1200mm	River
18	475892	170871	NoData	NoData	NoData	NoData
19	475943	170871	NoData	NoData	NoData	NoData
20	475994	170871	NoData	NoData	NoData	NoData
21	475790	170922	<150mm	River	<150mm	River
22	475841	170922	NoData	NoData	NoData	NoData
23	475892	170922	NoData	NoData	<150mm	River
24	475943	170922	NoData	NoData	<150mm	River

Label	Easting	Northing	1% AEP rivers and 0.5% AEP sea		0.1% AEP	
			Depth	Flood source	Depth	Flood source
25	475994	170922	NoData	NoData	NoData	NoData
Max value in selected area:			1200-2300mm		1200-2300mm	

Data in this table comes from the NaFRA2 New National Model. Depth values are shown in millimetres.
Cells which contain text 'NoData' for a scenario show that return period has been modelled but there is no flood risk for that return period at that location.
'Max value in selected area' is the deepest depth band range at any location within your drawn boundary.

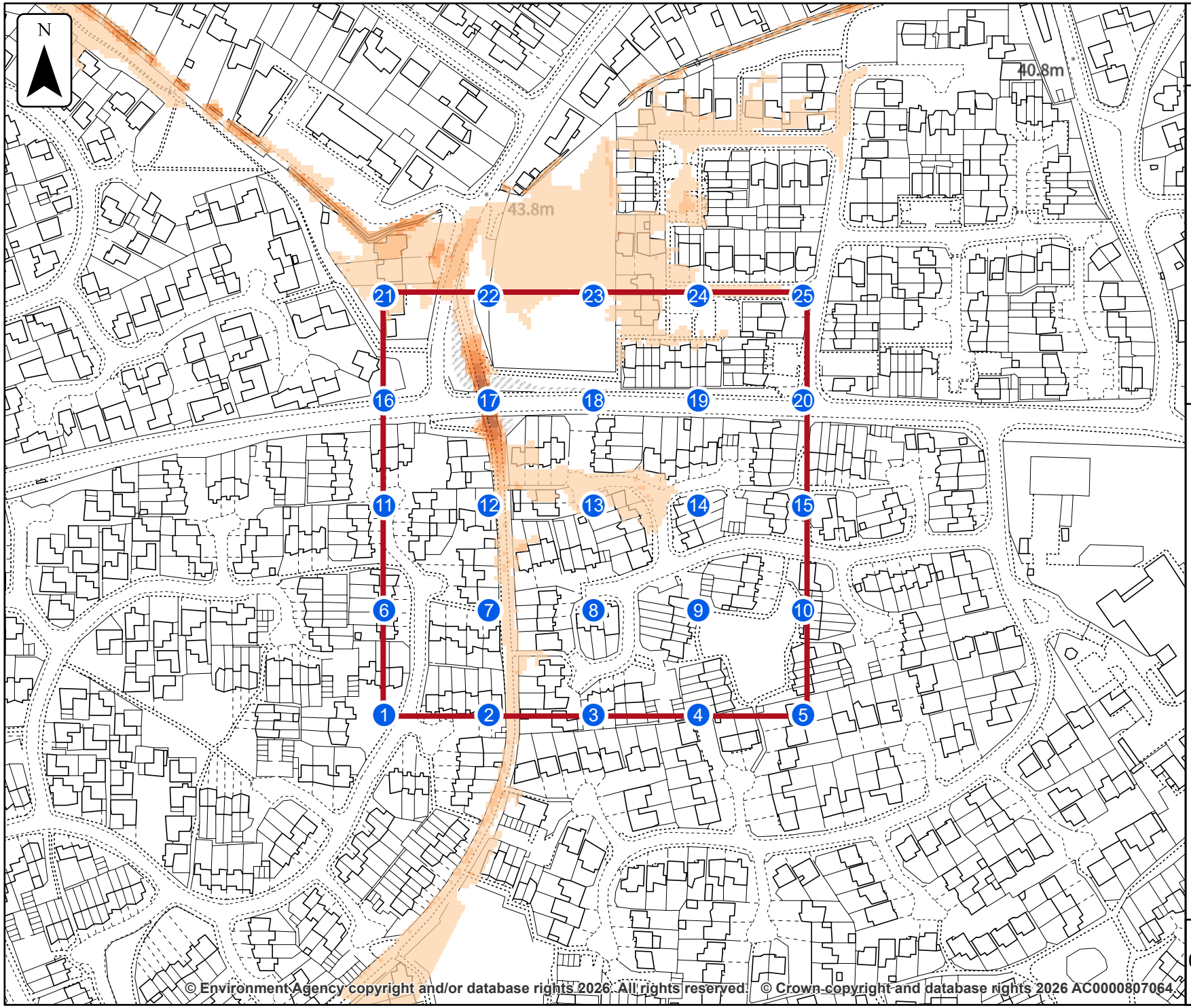

Environment Agency

Defended climate change rivers and sea flood risk depths

Location (easting/northing)
475893/170821

Scale
1:2,500

Created
12 Oct 2026

Model name
NaFRA2 new national model

Selected area

Flood Risk Depths

- >2300mm
- 1200-2300mm
- 900-1200mm
- 600-900mm
- 300-600mm
- 150-300mm
- <150mm

This map shows the 1% AEP rivers and 0.5% AEP sea depth data

0 25 50 75 100 125
metres

© Environment Agency copyright and/or database rights 2026. All rights reserved. © Crown copyright and database rights 2026 AC0000807064.

Sample point data

Defended climate change

Label	Easting	Northing	3.33% AEP		1% AEP rivers and 0.5% AEP sea		0.1% AEP	
			Depth	Flood source	Depth	Flood source	Depth	Flood source
1	475790	170718	NoData	NoData	NoData	NoData	NoData	NoData
2	475841	170718	NoData	NoData	NoData	NoData	NoData	NoData
3	475892	170718	NoData	NoData	NoData	NoData	NoData	NoData
4	475943	170718	NoData	NoData	NoData	NoData	NoData	NoData
5	475994	170718	NoData	NoData	NoData	NoData	NoData	NoData
6	475790	170769	NoData	NoData	NoData	NoData	NoData	NoData
7	475841	170769	NoData	NoData	NoData	NoData	NoData	NoData
8	475892	170769	NoData	NoData	NoData	NoData	NoData	NoData
9	475943	170769	NoData	NoData	NoData	NoData	NoData	NoData
10	475994	170769	NoData	NoData	NoData	NoData	NoData	NoData
11	475790	170820	NoData	NoData	NoData	NoData	NoData	NoData
12	475841	170820	NoData	NoData	NoData	NoData	NoData	NoData

Label	Easting	Northing	3.33% AEP		1% AEP rivers and 0.5% AEP sea		0.1% AEP	
			Depth	Flood source	Depth	Flood source	Depth	Flood source
13	475892	170820	NoData	NoData	<150mm	River	<150mm	River
14	475943	170820	NoData	NoData	NoData	NoData	NoData	NoData
15	475994	170820	NoData	NoData	NoData	NoData	NoData	NoData
16	475790	170871	NoData	NoData	NoData	NoData	NoData	NoData
17	475841	170871	900-1200mm	River	900-1200mm	River	1200-2300mm	River
18	475892	170871	NoData	NoData	NoData	NoData	NoData	NoData
19	475943	170871	NoData	NoData	NoData	NoData	NoData	NoData
20	475994	170871	NoData	NoData	NoData	NoData	NoData	NoData
21	475790	170922	NoData	NoData	<150mm	River	150-300mm	River
22	475841	170922	NoData	NoData	NoData	NoData	NoData	NoData
23	475892	170922	NoData	NoData	<150mm	River	<150mm	River
24	475943	170922	NoData	NoData	NoData	NoData	<150mm	River

Label	Easting	Northing	3.33% AEP		1% AEP rivers and 0.5% AEP sea		0.1% AEP	
			Depth	Flood source	Depth	Flood source	Depth	Flood source
25	475994	170922	NoData	NoData	NoData	NoData	NoData	NoData
Max value in selected area:			1200-2300mm		1200-2300mm		1200-2300mm	

Data in this table comes from the NaFRA2 New National Model. Depth values are shown in millimetres.
Cells which contain text 'NoData' for a scenario show that return period has been modelled but there is no flood risk for that return period at that location.
'Max value in selected area' is the deepest depth band range at any location within your drawn boundary.

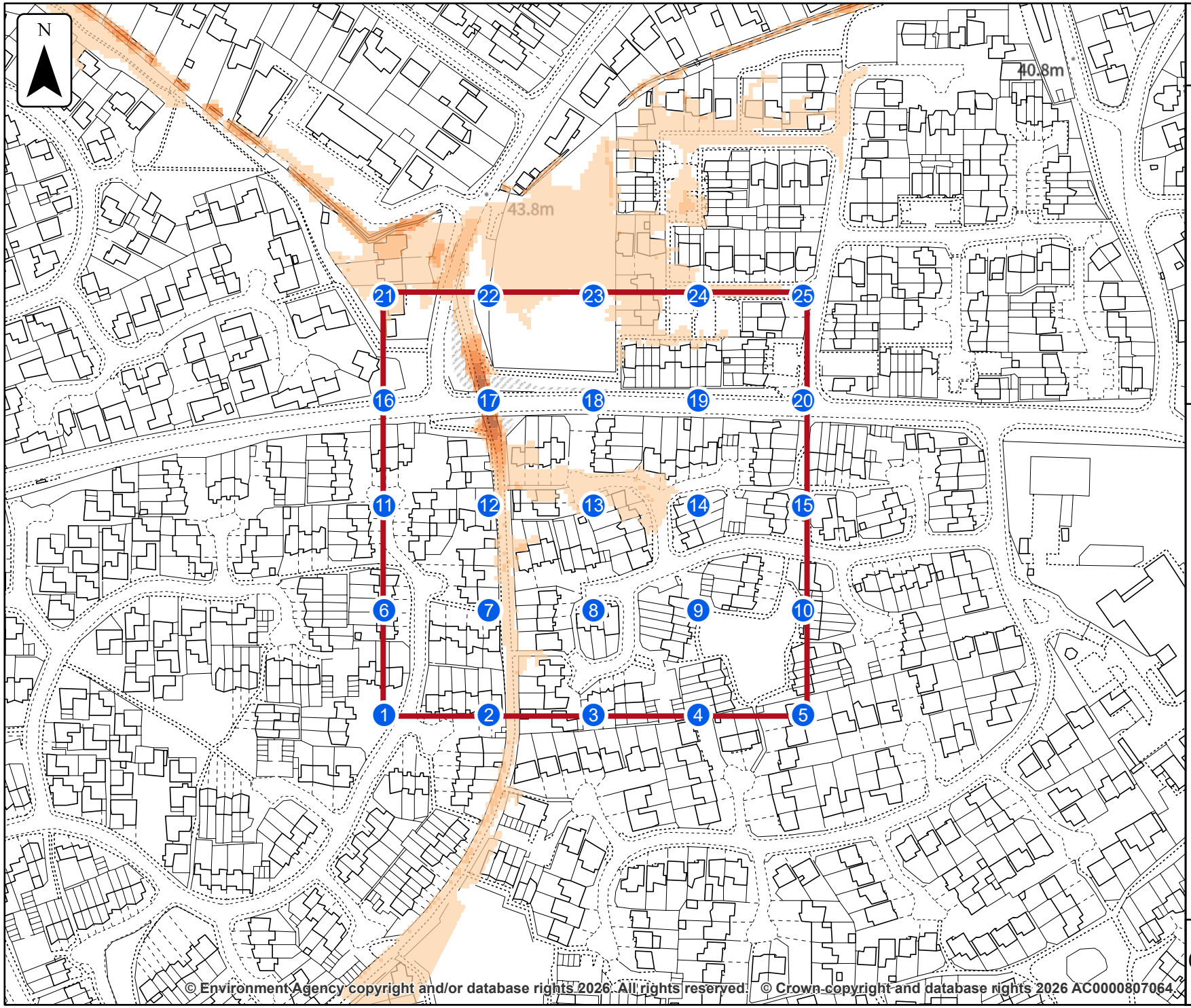

Environment Agency

Undefended climate change rivers and sea flood risk depths

Location (easting/northing)
475893/170821

Scale
1:2,500

Created
12 Oct 2026

Model name
NaFRA2 new national model

Selected area

Flood Risk Depths

- >2300mm
- 1200-2300mm
- 900-1200mm
- 600-900mm
- 300-600mm
- 150-300mm
- <150mm

This map shows the 1% AEP rivers and 0.5% AEP sea depth data

0 25 50 75 100 125
metres

© Environment Agency copyright and/or database rights 2026. All rights reserved. © Crown copyright and database rights 2026 AC0000807064.

Sample point data

Undefended climate change

Label	Easting	Northing	1% AEP rivers and 0.5% AEP sea		0.1% AEP	
			Depth	Flood source	Depth	Flood source
1	475790	170718	NoData	NoData	NoData	NoData
2	475841	170718	NoData	NoData	NoData	NoData
3	475892	170718	NoData	NoData	NoData	NoData
4	475943	170718	NoData	NoData	NoData	NoData
5	475994	170718	NoData	NoData	NoData	NoData
6	475790	170769	NoData	NoData	NoData	NoData
7	475841	170769	NoData	NoData	NoData	NoData
8	475892	170769	NoData	NoData	NoData	NoData
9	475943	170769	NoData	NoData	NoData	NoData
10	475994	170769	NoData	NoData	NoData	NoData
11	475790	170820	NoData	NoData	NoData	NoData
12	475841	170820	NoData	NoData	NoData	NoData

Label	Easting	Northing	1% AEP rivers and 0.5% AEP sea		0.1% AEP	
			Depth	Flood source	Depth	Flood source
13	475892	170820	<150mm	River	<150mm	River
14	475943	170820	NoData	NoData	NoData	NoData
15	475994	170820	NoData	NoData	NoData	NoData
16	475790	170871	NoData	NoData	NoData	NoData
17	475841	170871	900-1200mm	River	1200-2300mm	River
18	475892	170871	NoData	NoData	NoData	NoData
19	475943	170871	NoData	NoData	NoData	NoData
20	475994	170871	NoData	NoData	NoData	NoData
21	475790	170922	<150mm	River	150-300mm	River
22	475841	170922	NoData	NoData	NoData	NoData
23	475892	170922	<150mm	River	<150mm	River
24	475943	170922	NoData	NoData	<150mm	River

Label	Easting	Northing	1% AEP rivers and 0.5% AEP sea		0.1% AEP	
			Depth	Flood source	Depth	Flood source
25	475994	170922	NoData	NoData	NoData	NoData
Max value in selected area:			1200-2300mm		1200-2300mm	

Data in this table comes from the NaFRA2 New National Model. Depth values are shown in millimetres.
Cells which contain text 'NoData' for a scenario show that return period has been modelled but there is no flood risk for that return period at that location.
'Max value in selected area' is the deepest depth band range at any location within your drawn boundary.

Strategic flood risk assessments

We recommend that you check the relevant local authority's strategic flood risk assessment (SFRA) as part of your work to prepare a site specific flood risk assessment.

This should give you information about:

- the potential impacts of climate change in this catchment
- areas defined as functional floodplain
- flooding from other sources, such as canals, groundwater and reservoirs

Your lead local flood authority is Wokingham.

About this data

This data has been generated by strategic scale flood models and is not intended for use at the individual property scale. If you're intending to use this data as part of a flood risk assessment, please include an appropriate modelling tolerance as part of your assessment. The Environment Agency regularly updates its modelling. We recommend that you check the data provided is the most recent, before submitting your flood risk assessment.

Flood risk activity permits

Under the Environmental Permitting (England and Wales) Regulations 2016 some developments may require an environmental permit for flood risk activities from the Environment Agency. This includes any permanent or temporary works that are in, over, under, or nearby a designated main river or flood defence structure.

Find out more about flood risk activity permits

Help and advice

Contact the Thames Environment Agency team at enquiries_thm@environment-agency.gov.uk for:

- more information about getting a product 5, 6, 7 or 8
- general help and advice about the site you're requesting data for

Appendix C

Pre-application advice

Wokingham Borough Council, application 252471

Pre-application advice response letter, 20 October 2025

Date: 20 October 2025
Application: 252471

Nicholas Cussen
24 The Delph
Earley
Wokingham
RG6 3AN

WOKINGHAM BOROUGH COUNCIL

Development Management & Compliance
P.O. Box 157
Shute End, Wokingham
Berkshire, RG40 1BN
Tel: (0118) 974 6000
Minicom No: (0118) 974 6991

Pre-application Advice Response Letter

Application Number: 252471

Site Address: 24 The Delph, Earley, Wokingham, RG6 3AN

Expiry Date: 14 November 2025

Proposal: Pre-application advice for the proposed garage conversion plus erection of a single storey front extension along with changes to fenestration.

Dear Nicholas Cussen

Thank you for your request for planning advice which was validated on 17 October 2025. This letter will provide advice about your scheme and what you may need to do when submitting a planning application.

At this stage, we have not consulted anyone else about your scheme, such as neighbouring properties, but we would do so if a planning application is submitted. Before you submit a planning application, we recommend that you carry out your own public consultation and provide evidence of this through a Statement of Community Involvement.

We have provided a frequently asked questions page to answer some of the common queries about planning which will help explain the planning application process.

Private: Information that contains a small amount of sensitive data which is essential to communicate with an individual but doesn't require to be sent via secure methods.

Description of Proposal

The proposal involves the conversion of the existing integral garage and the erection of a single-storey front extension, with changes to the front elevation fenestration. The garage conversion would include replacing the existing garage door with a new brick wall and a window in its place.

The new front extension would provide a downstairs toilet and cloakroom, forming a small porch extension to the front of the property. The extension would increase the footprint of the dwelling by approximately 2.0 metres by 2.5 metres.

Site and Surroundings

24 The Delph is an end-of-terrace red brick dwelling located within a small cul-de-sac, set back and positioned perpendicular to the main highway. The property forms part of a short terrace of similar design and scale, typical of the established residential character of the area.

Opposite lies a matching terrace of comparable form finished in beige brick, with the two terraces facing each other across a landscaped central area. A line of mature trees is situated c9–12 metres from the front elevation of each terrace, providing a degree of screening and separation between the two rows of dwellings. As a result, the opposing front elevations are set c18–24 metres apart, maintaining a sense of openness and greenery within the cul-de-sac.

The surrounding area is residential in character, featuring modest two-storey houses with consistent scale and materials, contributing to a coherent and attractive suburban street scene.

Planning Constraints

The following planning constraints have been identified in relation to the site:

- Major development location - Earley
- Flood Zone 2/3
- Landscape Character Assessment 2019
- Ward – Hawkedon
- Parish – Earley

Assessment of Proposal & Key Issues

Principle of Development:

The National Planning Policy Framework has an underlying presumption in favour of sustainable development which is carried through to the local Development Plan. Policy CC01 of the MDD Local Plan states that planning applications that accord with the policies in the Development Plan for Wokingham Borough will be approved without delay, unless material considerations indicate otherwise.

Character of the Area – Assessment:

Private: Information that contains a small amount of sensitive data which is essential to communicate with an individual but doesn't require to be sent via secure methods.

CP1 of the Core Strategy states that the proposed external alterations should maintain the high quality of the environment.

CP3 of the Core Strategy states that the proposed external alterations should be of appropriate scale, mass, bulk, height, materials and of high-quality design.

The proposed single-storey front extension has been designed to align with the prevailing building line of the existing front porch. The modest scale and form of the extension result in a subordinate addition to the main property. In terms of appearance, while specific details of the proposed materials have not yet been provided, it is recommended that these match the existing dwelling to ensure visual coherence and compatibility with the local character. This is required to comply with Borough Design Guide sections R11, RD6 and RD7. The form and design of the porch should relate well to the existing front porch.

Overall, the proposal would be acceptable if the design and form relate well to the existing porch and dwelling.

The proposed replacement of garage door with windows would like have an acceptable appearance providing they are of a similar design and proportions to the fenestration in the existing property.

Highway Access and Parking Provision:

Car Parking: Policy CC07 and Appendix 2 of the MDD Local Plan stipulates minimum off street parking standards facilities.

In accordance with R23 of the Borough Design Guide SPD, where a garage is to be converted, the parking space is to be replaced.

P3 of the Borough Design Guide notes that parking spaces are to be a minimum of 5m x 2.5m and there should be 6m separation between the two rows of parking spaces to allow for safe manoeuvring.

For future calculations, the parking calculator can be found at Transport evidence (wokingham.gov.uk)

The conversion of the existing integral garage will result in the loss of an internal parking space; however, officers note that existing driveway seems to be able to accommodate a minimum of two vehicles. A parking plan will need to be provided if planning permission application is submitted. This meets the Borough Design Guide requirement for off-street parking provision and ensures the proposal remains consistent with local parking standards and character.

Flooding/Drainage:

Parts of the site lies within Flood Zone 2, The location of the extension would only have potential for a very minor incursion into Flood Zone 2.

Private: Information that contains a small amount of sensitive data which is essential to communicate with an individual but doesn't require to be sent via secure methods.

The proposal relates solely to minor works, including the conversion of an existing garage and the erection of a modest single-storey front extension measuring c2.0 × 2.5 metres. The development would not result in the creation of an additional dwelling or a significant increase in the building footprint.

The planning practice guidance states the following for minor development in flood zone 2:
"Applications for minor development involving extensions or additions should still meet the requirements to provide a site-specific flood risk assessment (as per footnote 55 of the National Planning Policy Framework). A pragmatic approach should be taken to the scope and level of detail of the assessment – a shorter, simpler assessment is likely to be sufficient in most such cases. As a minimum, the assessment needs to show that the development will be safe for its users for the intended lifetime of the development, without increasing flood risk elsewhere, and be sufficiently flood resistant and resilient to the level and nature of the flood risk."
This information should be submitted with any future planning application.

Summary

In summary, the proposal represents a modest and proportionate domestic alteration that appears to be a subservient addition to the amin dwelling. I cannot comment of the appearance of the structure but this should utilise and design and form to match the existing house. The proposed new windows should respect the size and proportions of fenestration in the existing dwelling.

Sufficient off-street parking will need to be demonstrated via a parking plan, in accordance with local parking guidance.

Although the site lies partly within Flood Zones 2 the small scale of the extension means that flood risk considerations can be likely appropriately addressed subject to the submission of a proportionate Flood Risk Assessment at application stage.

Overall, the scheme is likely to be considered acceptable subject to the considerations set out above.

Submitting a Planning Application

Once you are ready to apply, please submit an application through the Planning Portal. Specific documents are set out in the appendices below but refer to the Local Validation List available on the council's how to apply for planning permission page to assist you with ensuring the plans and documents submitted meet our validation requirements.

Other Guidance

Your development may also require Building Regulation approval to ensure it is built to national safety, design, and environmental standards. The Council's Local Authority Building Control (LABC) service offers a full range of plan approval,

Private: Information that contains a small amount of sensitive data which is essential to communicate with an individual but doesn't require to be sent via secure methods.

inspection, and associated services through an ISO9001 nationally accredited team of qualified building surveyors. These surveyors work closely with the Council's planning department to ensure the appropriate construction of your build. To find out more visit the Council's Building Control website or call 0300 790 0580 to speak to a member of the team.

If your project requires a dropped kerb on the road in front of your house then you may require consent from the highway authority; further information is available on the Council's dropped kerbs page. Finally, if your project includes 100 sqm or more of new floor area then it is liable for the community infrastructure levy. Refer to the Council's CIL page for more information.

This concludes the pre-application process and I trust that this informal advice is of use to you. Please be aware that it is given without prejudice to any future decision that the Council may take. If you would like further advice, then a new pre-application submission and associated fee will be required.

Yours sincerely,

Jessie Arrow-Smith

Planning Officer

Authorised by:

Private: Information that contains a small amount of sensitive data which is essential to communicate with an individual but doesn't require to be sent via secure methods.

Appendix One – Relevant Policies and Guidance

The relevant policies associated with this proposal are as follows:

National Policy	National Planning Policy Framework (NPPF) National Planning Policy Guidance (NPPG)
Core Strategy 2010 (CS)	CP1 – Sustainable Development CP3 – General Principles for Development
Managing Development Delivery Local Plan 2014 (MDD Local Plan)	CC01 – Presumption in Favour of Sustainable Development CC02 – Development Limits CC07 – Parking CC09 – Development and Flood Risk CC10 – Sustainable Drainage
Wokingham Borough Local Plan Update (LPU)	SS1 – Sustainable development principles SS2 – Spatial strategy and settlement hierarchy
Other	Borough Design Guide Supplementary Planning Document CIL Guidance + 123 List

Appendix Two – Site History

The relevant planning applications associated with this site are as follows:

Application Number	Description	Decision & Date
N/a	N/a	N/a

Appendix Three – Consultee Responses

The relevant consultee responses are summarised below. Where indicated, responses are attached in full.

Consultee	Summary
WBC Drainage	Expresses concern with the site lying partly in Flood Zone 3, request a site-specific Flood Risk Assessment (FRA).
WBC Highways	States the loss of 0.5 of a parking space and the requirement of a parking plan at the application stage.

Private: Information that contains a small amount of sensitive data which is essential to communicate with an individual but doesn't require to be sent via secure methods.

Appendix Four – Validation Requirements

The documents required for validating any future planning application are as follows:

● – required document
○ – possibly required document: these may either help determine an application or resolve the need to use a pre-commencement condition

Please note supporting information with regards to what details are required for each document are contained on the following page on the Council's website: how to apply for planning permission page.

Standard Documents

Application form	●
Location Plan (1:1250) and Block Plan (1:500)	●
All plans to metric scale and to show existing and proposed	●
- Floor Plans	●
- Elevation Plans	●
- Roof Plans	●
- Site Layout Plan	●
Correct fee (where one is necessary)	●
CIL Form 0	●
Parking Pan	●
Flood Risk Assessment	●

Additional Documents

Biodiversity survey and report
Design and Access Statement
Tree Survey / Arboricultural Statement
Water Course / Drainage Statement

Private: Information that contains a small amount of sensitive data which is essential to communicate with an individual but doesn't require to be sent via secure methods.

Appendix D

Architect's drawings

Postlethwaite Hill Architects:

A0057-PHA-XX-XX-DR-A-P0001 Rev 2 Plans & Elevations - Existing & Proposed

A0057-PHA-XX-XX-DR-A-P0003 Rev 1 Existing Site Plan

A0057-PHA-XX-XX-DR-A-M1001 Rev 2 Existing Photographs

EXISTING PLANS & ELEVATIONS

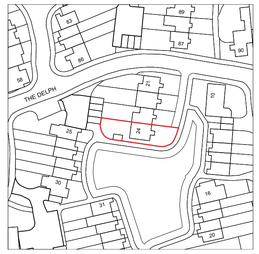

Existing Site Plan

Scale: 1:1250

N

0 10 50 m

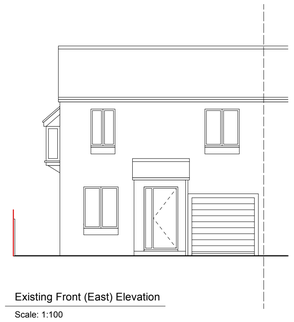

Existing Front (East) Elevation

Scale: 1:100

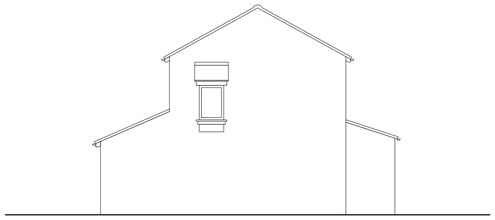

Existing Side (South) Elevation

Scale: 1:100

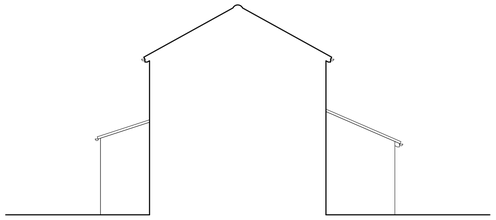

Existing Side (North) Elevation

Scale: 1:100

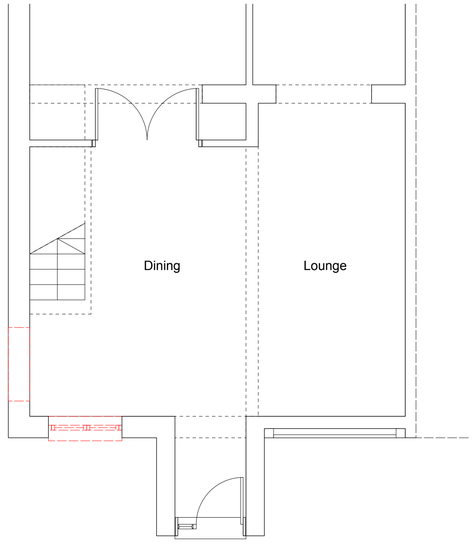

Existing Ground Floor Plan

Scale: 1:50

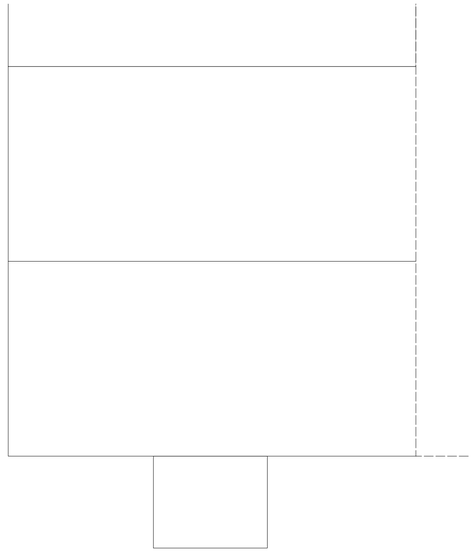

Existing Roof Plan

Scale: 1:50

PROPOSED PLANS & ELEVATIONS

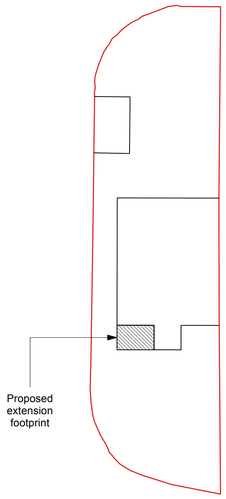

Proposed Block Plan

Scale: 1:200

0 1 10 m



Proposed Front (East) Elevation

Scale: 1:100

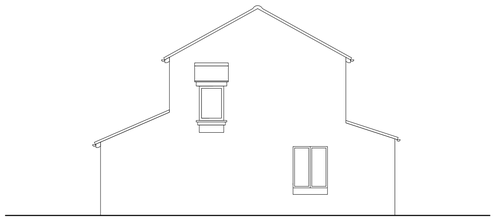

Proposed Side (South) Elevation

Scale: 1:100

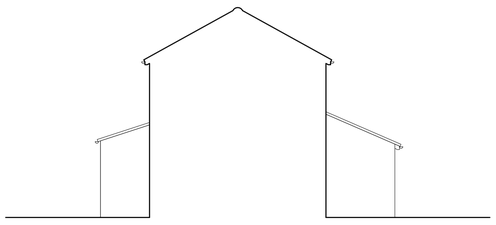

Proposed Side (North) Elevation

Scale: 1:100

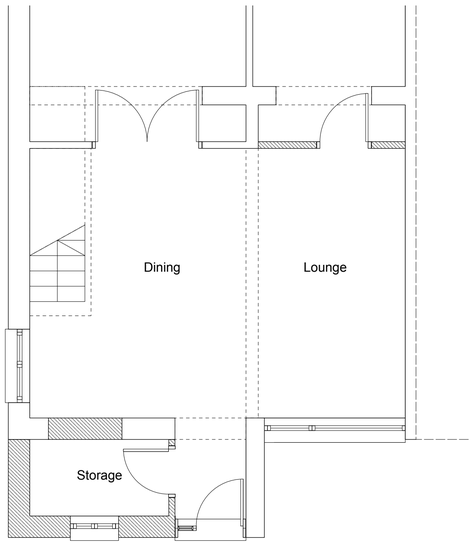

Proposed Ground Floor Plan

Scale: 1:50

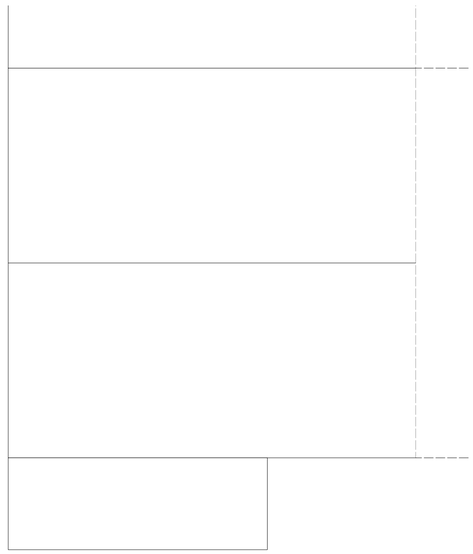

Proposed Roof Plan

Scale: 1:50

General notes

Post-planning approval, additional investigations and measurements may be required to ensure compliance with Building Regulations and other technical requirements.

This drawing must be read in conjunction with all other relevant drawings, specification clauses and current design risk register

This drawing must not be used on site unless issued for construction
All setting out must be checked on site
All levels must be checked on site
All dimensions must be checked on site
Use figured dimensions only

© 2025 Postlethwaite Hill Architects Ltd

Postlethwaite Hill Architects Ltd shall not be responsible for any use of this drawing and its contents for any purpose other than that for which it was prepared and provided. Should the Client or project consultants require to pass electronic copies of the document to other parties, this should be for co-ordination purposes only, the whole of the file should be so copied, but no professional liability or warranty shall be extended to other parties by Postlethwaite Hill Architects in this connection without the explicit written agreement thereto by Postlethwaite Hill Architects Ltd.

Status:	Revision	Description	Date	Drawn
Planning	1	For Client	25/09/26	LP
	2	For Planning	30/09/26	LP

Key:

Application site boundary

Area to be demolished

Purpose of information:

For Client	☐
For Coordination	☐
For Statutory Approval	☒
For Review	☐
For Construction	☐

All information on this drawing is not for construction unless it is marked for construction.

Scale

1:100 Scale bar

0 2 10 m

1:50 Scale bar

0 1 5 m

North

Client

Tina Cussen

Project Title

24 The Delph

Project Address

24 The Delph
Lower Earley
Wokingham
RG6 3AN

Drawing Title

Plans & Elevations
Existing & Proposed

Scale @ A1	Date
AS NOTED	Sept '26

Drawing Number	Status
A0057-PHA-XX-XX-DR-A-P0001	Planning

Postlethwaite Hill Architects

T: +447585808048
E: hello@ph-a.co.uk
W: www.postlethwaitehillarchitects.co.uk

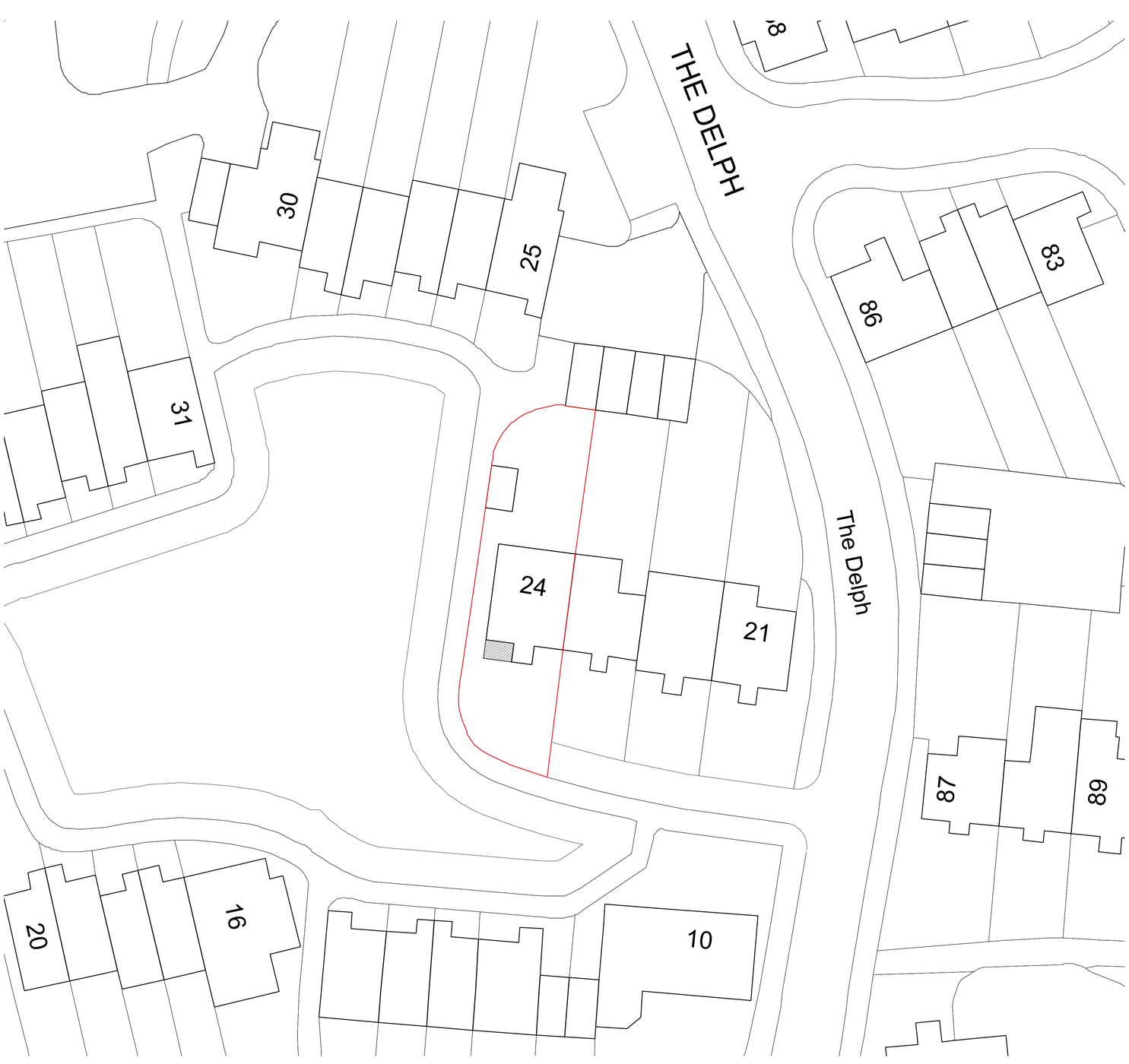

General notes

Post-planning approval, additional investigations and measurements may be required to ensure compliance with Building Regulations and other technical requirements.

This drawing must be read in conjunction with all other relevant drawings, specification clauses and current design risk register

This drawing must not be used on site unless issued for construction
All setting out must be checked on site
All levels must be checked on site
All dimensions must be checked on site
Use figured dimensions only

© 2025 Postlethwaite Hill Architects Ltd

Postlethwaite Hill Architects Ltd shall not be responsible for any use of this drawing and its contents for any purpose other than that for which it was prepared and provided. Should the Client or project consultants require to pass electronic copies of the document to other parties, this should be for co-ordination purposes only, the whole of the file should be so copied, but no professional liability or warranty shall be extended to other parties by Postlethwaite Hill Architects in this connection without the explicit written agreement thereto by Postlethwaite Hill Architects Ltd.

Status:	Revision	Description	Date	Drawn
Planning	1	For Coordination	13/10/26	LP

Key:

Application site boundary

Purpose of information:

- For Client ☐
- For Coordination ☒
- For Statutory Approval ☐
- For Review ☐
- For Construction ☐

All information on this drawing is not for construction unless it is marked for construction.

Scale

0 1 10 m

North

N

Client

Tina Cussen

Project Title

24 The Delph

Project Address

24 The Delph
Earley
Wokingham
RG6 3AN

Drawing Title

Existing site plan

Scale @ A1	Date
AS NOTED	Sept '26

Drawing Number	Status
A0057-PHA-XX-XX-DR-A-P0003	Planning

Postlethwaite Hill Architects

T: +447585808048
E: hello@ph-a.co.uk
W: www.postlethwaitehillarchitects.co.uk

EXISTING PHOTOGRAPHS



1. View looking towards drive and front of property



2. View looking towards front of property



3. View looking towards side passage



4. View looking towards end gable

General notes

Post-planning approval, additional investigations and measurements may be required to ensure compliance with Building Regulations and other technical requirements.

This drawing must be read in conjunction with all other relevant drawings, specification clauses and current design risk register

This drawing must not be used on site unless issued for construction
All setting out must be checked on site
All levels must be checked on site
All dimensions must be checked on site
Use figured dimensions only

© 2025 Postlethwaite Hill Architects Ltd

Postlethwaite Hill Architects Ltd shall not be responsible for any use of this drawing and its contents for any purpose other than that for which it was prepared and provided. Should the Client or project consultants require to pass electronic copies of the document to other parties, this should be for co-ordination purposes only, the whole of the file should be so copied, but no professional liability or warranty shall be extended to other parties by Postlethwaite Hill Architects in this connection without the explicit written agreement thereto by Postlethwaite Hill Architects Ltd.

Status: Planning

Revision	Description	Date	Drawn
1	For Client	25/09/26	LP
2	For Planning	30/09/26	LP

Key:

Purpose of information:

- For Client ☐
- For Coordination ☐
- For Statutory Approval ☒
- For Review ☐
- For Construction ☐

All information on this drawing is not for construction unless it is marked for construction.

Scale

North

Client

Tina Cussen

Project Title

24 The Delph

Project Address

24 The Delph
Lower Earley
Wokingham
RG6 3AN

Drawing Title

Existing Photographs

Scale @ A1

AS NOTED

Date

Sept '26

Drawing Number

A0057-PHA-XX-XX-DR-A-M1001

Status

Planning

Postlethwaite Hill Architects

T: +447585808048
E: hello@ph-a.co.uk
W: www.postlethwaitehillarchitects.co.uk

Appendix E

SuDSPod calculations and technical data

Causeway Flow+ v16.0 surface water calculations, FEH22 rainfall (sudspod front.pfd, 28/10/2026)

GreenBlue Urban SuDSPod data sheet, 24DataSuDS-0044.1

GreenBlue Urban SuDSPod downpipe kit data sheet, 24DataSuDS-0040.1

GreenBlue Urban SuDSPod frequently asked questions

GreenBlue Urban SuDSPod quick start guide

Design Settings

Rainfall Methodology	FEH-22	Minimum Velocity (m/s)	1.00
Return Period (years)	1	Connection Type	Level Soffits
Additional Flow (%)	0	Minimum Backdrop Height (m)	0.200
CV	0.950	Preferred Cover Depth (m)	1.200
Time of Entry (mins)	5.00	Include Intermediate Ground	✓
Maximum Time of Concentration (mins)	30.00	Enforce best practice design rules	✓
Maximum Rainfall (mm/hr)	50.0		

Nodes

Name	Area (ha)	T of E (mins)	Cover Level (m)	Easting (m)	Northing (m)	Depth (m)	Invert Level (m)
Depth/Area 1	0.001	5.00	100.000	-6.344	59.306	0.830	99.170

Simulation Settings

Rainfall Methodology	FEH-22	Analysis Speed	Normal	Starting Level (m)	
Rainfall Events	Singular	Skip Steady State	x	Check Discharge Rate(s)	x
Summer CV	0.950	Drain Down Time (mins)	1440	Check Discharge Volume	x
Winter CV	0.950	Additional Storage (m³/ha)	0.0		

Storm Durations

15	30	60	120	180	240	360	480	600	720	960	1440

Return Period (years)	Climate Change (CC %)	Additional Area (A %)	Additional Flow (Q %)	Return Period (years)	Climate Change (CC %)	Additional Area (A %)	Additional Flow (Q %)
1	0	0	0	30	0	0	0
2	0	0	0	100	40	0	0

Node Depth/Area 1 Online Orifice Control

Flap Valve	x	Invert Level (m)	99.170	Discharge Coefficient	0.600
Replaces Downstream Link	✓	Diameter (m)	0.008		

Node Depth/Area 1 Online Orifice Control

Flap Valve	x	Invert Level (m)	99.330	Discharge Coefficient	0.600
Replaces Downstream Link	✓	Diameter (m)	0.008		

Node Depth/Area 1 Online Orifice Control

Flap Valve	x	Invert Level (m)	99.470	Discharge Coefficient	0.600
Replaces Downstream Link	✓	Diameter (m)	0.009		

Node Depth/Area 1 Online Orifice Control

Flap Valve	x	Invert Level (m)	99.630	Discharge Coefficient	0.600
Replaces Downstream Link	✓	Diameter (m)	0.009		

Node Depth/Area 1 Online Weir Control

Flap Valve	x	Invert Level (m)	99.870	Discharge Coefficient	0.590
Replaces Downstream Link	✓	Width (m)	0.320		

Flow+ v16.0 Copyright © 1988-2026 Causeway Technologies Ltd

Node Depth/Area 1 Depth/Area Storage Structure

Base Inf Coefficient (m/hr)	0.00000	Safety Factor	2.0	Invert Level (m)	99.170
Side Inf Coefficient (m/hr)	0.00000	Porosity	0.80	Time to half empty (mins)	25

Depth (m)	Area (m²)	Inf Area (m²)	Depth (m)	Area (m²)	Inf Area (m²)	Depth (m)	Area (m²)	Inf Area (m²)
0.000	0.4	0.0	0.830	0.4	0.0	0.831	0.0	0.0

Flow+ v16.0 Copyright © 1988-2026 Causeway Technologies Ltd

Results for 1 year Critical Storm Duration. Lowest mass balance: 100.00%

Node Event	US Node	Peak (mins)	Level (m)	Depth (m)	Inflow (l/s)	Node Vol (m³)	Flood (m³)	Status
30 minute summer	Depth/Area 1	21	99.201	0.031	0.1	0.0098	0.0000	OK

Link Event (Upstream Depth)	US Node	Link	Outflow (l/s)	Discharge Vol (m³)
30 minute summer	Depth/Area 1	Orifice	0.0	0.0
30 minute summer	Depth/Area 1	Orifice	0.0	0.0
30 minute summer	Depth/Area 1	Orifice	0.0	0.0
30 minute summer	Depth/Area 1	Orifice	0.0	0.0
30 minute summer	Depth/Area 1	Weir	0.0	0.0

Flow+ v16.0 Copyright © 1988-2026 Causeway Technologies Ltd

Results for 2 year Critical Storm Duration. Lowest mass balance: 100.00%

Node Event	US Node	Peak (mins)	Level (m)	Depth (m)	Inflow (l/s)	Node Vol (m³)	Flood (m³)	Status
120 minute summer	Depth/Area 1	72	99.242	0.072	0.1	0.0229	0.0000	OK

Link Event (Upstream Depth)	US Node	Link	Outflow (l/s)	Discharge Vol (m³)
120 minute summer	Depth/Area 1	Orifice	0.0	0.1
120 minute summer	Depth/Area 1	Orifice	0.0	0.0
120 minute summer	Depth/Area 1	Orifice	0.0	0.0
120 minute summer	Depth/Area 1	Orifice	0.0	0.0
120 minute summer	Depth/Area 1	Weir	0.0	0.0

Flow+ v16.0 Copyright © 1988-2026 Causeway Technologies Ltd

Results for 30 year Critical Storm Duration. Lowest mass balance: 100.00%

Node Event	US Node	Peak (mins)	Level (m)	Depth (m)	Inflow (l/s)	Node Vol (m³)	Flood (m³)	Status
30 minute summer	Depth/Area 1	30	99.369	0.199	0.4	0.0638	0.0000	OK

Link Event (Upstream Depth)	US Node	Link	Outflow (l/s)	Discharge Vol (m³)
30 minute summer	Depth/Area 1	Orifice	0.1	0.3
30 minute summer	Depth/Area 1	Orifice	0.0	0.0
30 minute summer	Depth/Area 1	Orifice	0.0	0.0
30 minute summer	Depth/Area 1	Orifice	0.0	0.0
30 minute summer	Depth/Area 1	Weir	0.0	0.0

Flow+ v16.0 Copyright © 1988-2026 Causeway Technologies Ltd

Results for 100 year +40% CC Critical Storm Duration. Lowest mass balance: 100.00%

Node Event	US Node	Peak (mins)	Level (m)	Depth (m)	Inflow (l/s)	Node Vol (m³)	Flood (m³)	Status
60 minute summer	Depth/Area 1	42	99.547	0.377	0.6	0.1206	0.0000	OK

Link Event (Upstream Depth)	US Node	Link	Outflow (l/s)	Discharge Vol (m³)
60 minute summer	Depth/Area 1	Orifice	0.1	0.4
60 minute summer	Depth/Area 1	Orifice	0.1	0.1
60 minute summer	Depth/Area 1	Orifice	0.0	0.1
60 minute summer	Depth/Area 1	Orifice	0.0	0.0
60 minute summer	Depth/Area 1	Weir	0.0	0.0

Flow+ v16.0 Copyright © 1988-2026 Causeway Technologies Ltd

SuDSPod®

On plot attenuation

Data Sheet
TBC



Overview

Discover GreenBlue Urban's cost effective, cutting-edge solution that addresses a myriad of challenges associated with stormwater management, ranging from reducing peak flow rates from roofs, complex SuDS designs to reducing CSO spills.

SuDSPod offers a versatile and innovative on plot attenuation approach that benefits new developments, and can be seamlessly retrofitted to private, public housing and service buildings.

The patented design is the next generation of a traditional drain-down vessel, delivering industry leading attenuation performance, providing in some cases up to five times its own storage volume. With a focus on simplicity, effectiveness, and adaptability, SuDSPod delivers on all four pillars of SuDS as set in the CIRIA SuDS Manual Guidance and is poised to transform the landscape of drainage systems.

Components

- Contribution towards reduction of CSO spills through intelligent on-plot attenuation.
- Potential sewer upgrade avoidance through highly effective peak flow attenuation.
- Maximise land values through reduction of downstream retention pond/tank size.

Benefits

- Suits most downpipes.
- Fast and simple install.
- Failsafe design.
- Homeowner-friendly maintenance.
- Attractive cladding options.
- Positive ecological impact.

Northpoint, Compass Park,
Bodiam, East Sussex, TN32 5BS
T: +44 (0)1580 830 800 E: enquiries@greenblue.com W: greenblue.com

GreenBlue URBAN
Establishing the future urban landscape

Overview

Code	Description
SUDSPOD12X5C	SuDSPod c/w Levelling Frame & Soil/Mulch - no cladding
SUDSPOD12X5VA	SuDSPod c/w Tanalised Vertical Cladding, Levelling Frame & Soil/Mulch
SUDSPOD12X5VGR	SuDSPod c/w Green Stained Vertical Cladding, Levelling Frame & Soil/Mulch
SUDSPOD12X5VRO	SuDSPod c/w Rustic Oak Stained Vertical Cladding, Levelling Frame & Soil/Mulch
SUDSPOD12X5VBK	SuDSPod c/w Black Stained Vertical Cladding, Levelling Frame & Soil/Mulch
SUDSPOD12X5VWG	SuDSPod c/w Weathered Grey Stained Vertical Cladding, Levelling Frame & Soil/Mulch
SUDSPOD12X5VBIR	SuDSPod c/w Birch Wood Stained Vertical Cladding, Levelling Frame & Soil/Mulch

Additional Information

- Intended to manage 30-year return period storm for a 50m² roof subject to geographical location.
- Accurate modelled data currently in development.
- Optimum roof catchment area 50-80m² subject to location.
- Live trial projects for long term testing currently in development – please enquire if you have a project you feel would be suitable to undertake a trial installation in partnership with GreenBlue Urban.

Material

- 100% recycled MDPE

Cladding Options


Standard

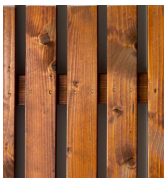
Rustic Oak (stained)


Weathered Grey (Paint)


Birch Wood (Paint)


Green (Paint)


Black (Paint)

Accessories

- SPPBA - Promotional board
- SPDPFBA - Downpipe fitting kit
- SPCLDA - Cloud downpipe feature
- SPBNCHA - Timber seat unit

Maintenance

General maintenance will include checking inlet and outlet, clearing moss that may be deposited and checking plant health – as you would with any landscape element.

Northpoint, Compass Park,
Bodiam, East Sussex, TN32 5BS
T: +44 (0)1580 830 800 E: enquiries@greenblue.com W: greenblue.com

GreenBlue URBAN
Establishing the future urban landscape

SPDPFBA / SPDPFWA
SuDSPod® downpipe kit

Data Sheet
24DataSuDS-0040.1



Overview	-	Downpipe adaption kit including hopper, 68mm diameter pipe and fittings black / white - Delivered as a kit to be assembled on site
Components	-	1x 1m downpipe section - 3x 92.5 ° elbow - 2x 112.5°elbow - 1x Hopper - 1x Solvent cement 125ml
Code	-	SPDPFBA (black) / SPDPFWA (white)
Material	-	PVC

Northpoint, Compass Park,
Bodiam, East Sussex, TN32 5BS
T: +44 (0)1580 830 800 E: enquiries@greenblue.com W: greenblue.com

GreenBlue URBAN
Establishing the future urban landscape

SuDSPod™
Frequenty Asked Questions

Q: What's the expected lifespan of the main unit?
A: It is designed to last the life of the property – in excess of 25 years.

Q: What's the lifespan of the cladding?
A: The cladding is guaranteed for 5 years with suitable maintenance.

Q: How often do you have to change the soil?
A: The special soil should never need replacement. It is a unique mix that with healthy plant life will regenerate itself.

Q: What maintenance is involved?
A: General maintenance will include checking inlet and outlet, clearing moss that may be deposited and checking plant health – as you would with any landscape element.

Q: How do you level it up?
A: The SUDSPod is suitable for placing on a level surface but a levelling kit is available allowing it to be mounted on a slope of up to 1:10.

Q: Does it need to stand on a concrete base?
A: No, any firm and solid ground will accommodate the SuDSPod.

Q: Can it have a tap so it can store water for summer use?
A: This feature is currently in design.

Q: What plants should we use?
A: A planting palette choice is available from GreenBlue Urban.

Q: What is the minimum drain down time from half full?
A: This does depend of the intensity of the storm event, but a maximum of 6-8 hours.

Q: Will it silt up?
A: Any silt deposition will be visible on the "landing pad" or forebay, where it can be easily cleared. Silt that enters the silt trap via the Arboresin filter can be cleared annually.

Q: Can you use any soil?
A: No, a specially designed soil is supplied with the SuDSPod unit.

Q: If you use it for a bigger roof than the design size, what happens?
A: Larger roof will mean that the unit will reach exceedance flow rates quicker.

Q: Can you put it on a balcony?
A: Depending on the structural capabilities of the balcony, there is no reason why balcony mounting is not suitable. Total weight when full is 518kgs.

Q: What other parts are needed to install it?
A: Particular parts to suit the diverted downpipe rainwater system will be required and suitable plants.

T: +44 (0)1580 830 800
E: enquiries@greenblue.com
W: greenblue.com

Establishing the future urban landscape

SuDSPod™
Frequenty Asked Questions

Q: How much does it weigh empty?
A: 65kg plus 113kg soil.

Q: What does it weigh full of water and soil?
A: 518kg.

Q: How big is SuDSPod?
A: Without cladding - 1210mm long, 520mm wide, 810mm tall. With cladding - 1250mm long, 525mm wide, 825mm tall.

Q: Is it made from recycled plastic?
A: Yes 100% recycled MDPE.

Q: Is it recyclable at end of life?
A: Yes, fully recycleable.

Q: Are there plans to make a larger/smaller model?
A: Designed to perform optimally for roof areas of approximately 50–100m² across the majority of rainfall events. The system can also be used with larger roof areas, with performance depending on location, rainfall intensity and event duration. Performance calculations for specific roof areas, locations and design storm events are available on request.

Q: Does it need to be fixed to a wall?
A: This is an option where interference is a possibility.

Q: Can litter get trapped behind it?
A: When properly installed, there is no space for accumulated litter.

Q: Will it cause damp if too close to a wall?
A: The cladding system allows air movement so there should be no damp issues behind the unit.

Q: Is it viewed as a permanent installation by water companies/Lead Local Flood Authorities(LLFAs)?
A: Yes, although it can be moved if required.

Q: Can the volumes attenuated be included within site calculations?
A: Yes, there is an InfoDrainage model available to support this.

Q: Is there a risk of mosquitos in standing water?
A: There is no standing water – all water is drained so there is nothing for insects to breed in.

Q: Does it count towards BNG?
A: This is dependent upon the local authority and legislation in various areas.

T: +44 (0)1580 830 800
E: enquiries@greenblue.com
W: greenblue.com

Establishing the future urban landscape

SuDSPod

Quick start guide

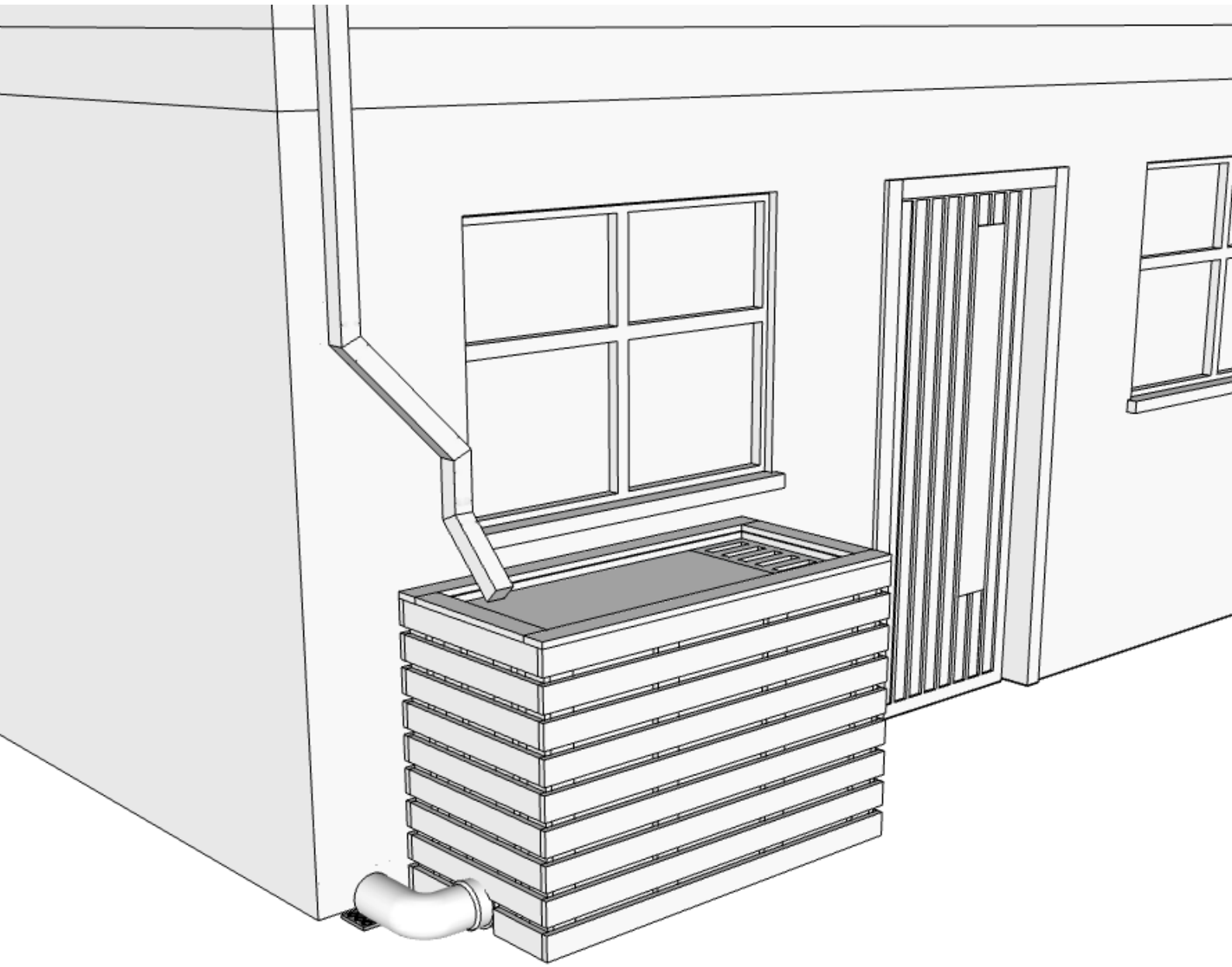

T: +44 (0)1580 830 800
E: enquiries@greenblue.com
W: greenblue.com

GreenBlue URBAN
Creating healthier urban spaces in harmony with nature

SuDSPod
Quick start guide

1 - PLANNING

CHECK LOCATION
CHECK DOWNPIPE & OUTLET TYPES
PLAN PARTS REQUIRED

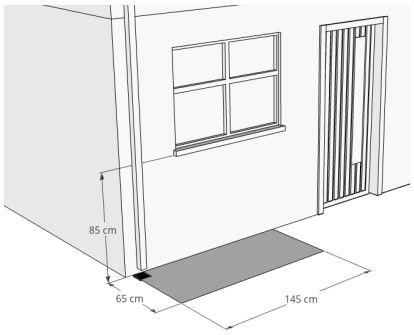

2 - BASE

PREPARE BASE
POSITION SuDSPod

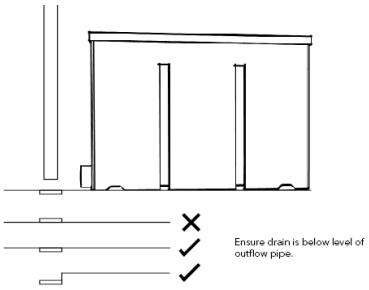

3 - OUTLET

OUTLET CONNECTION

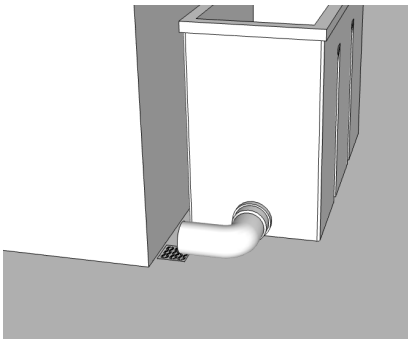

4 - INLET

INLET CONNECTION

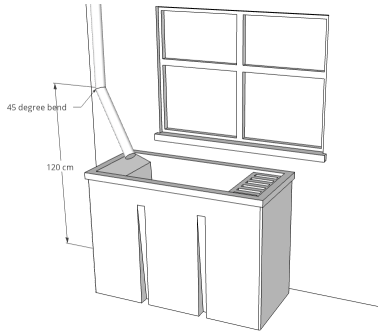

5 - PLANTS

FILTER BLOCK, SOIL,
PLANTING

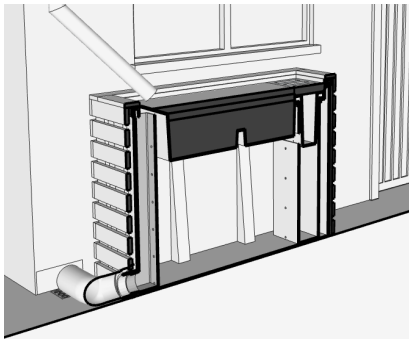

6 - CLADDING

CLADDING

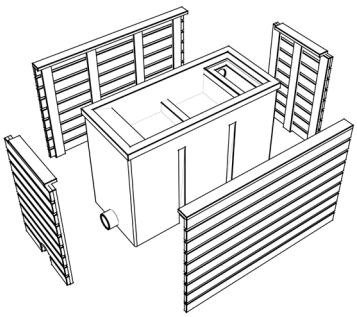

Scan QR code to discover more on SuDSPod

T: +44 (0)1580 830 800
E: enquiries@greenblue.com
W: greenblue.com

MADE IN BRITAIN®

GreenBlue® URBAN
Establishing the future urban landscape

1 Location and base

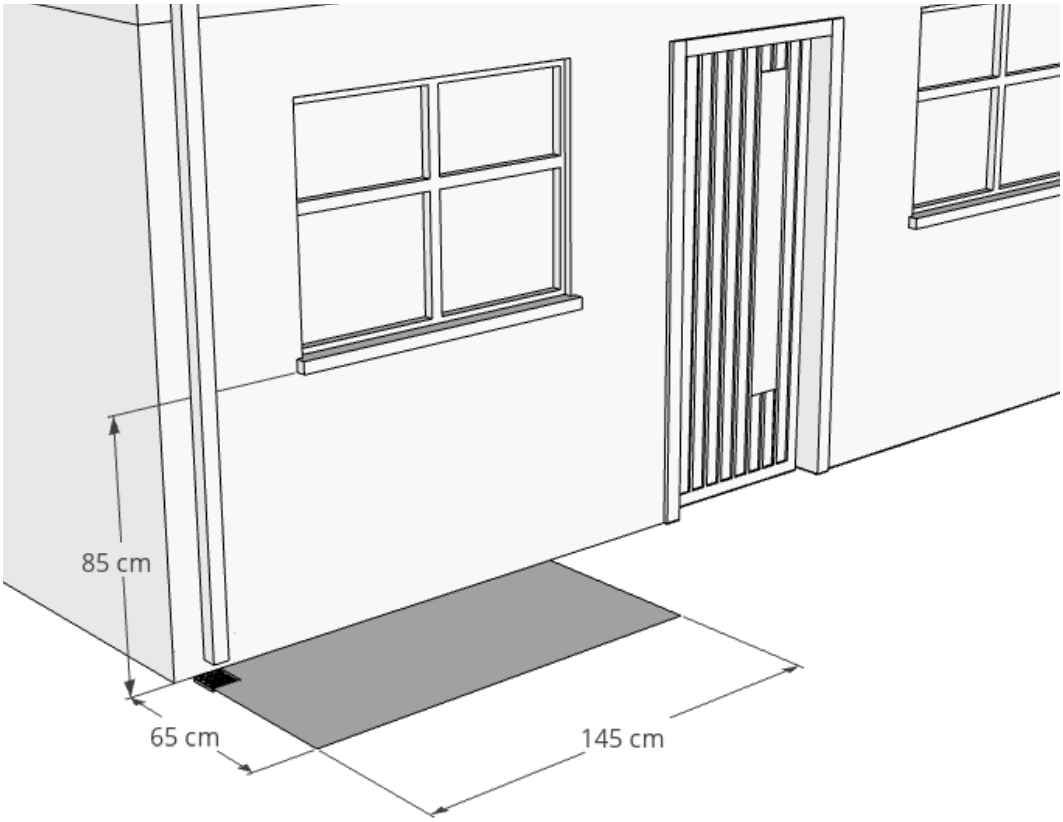

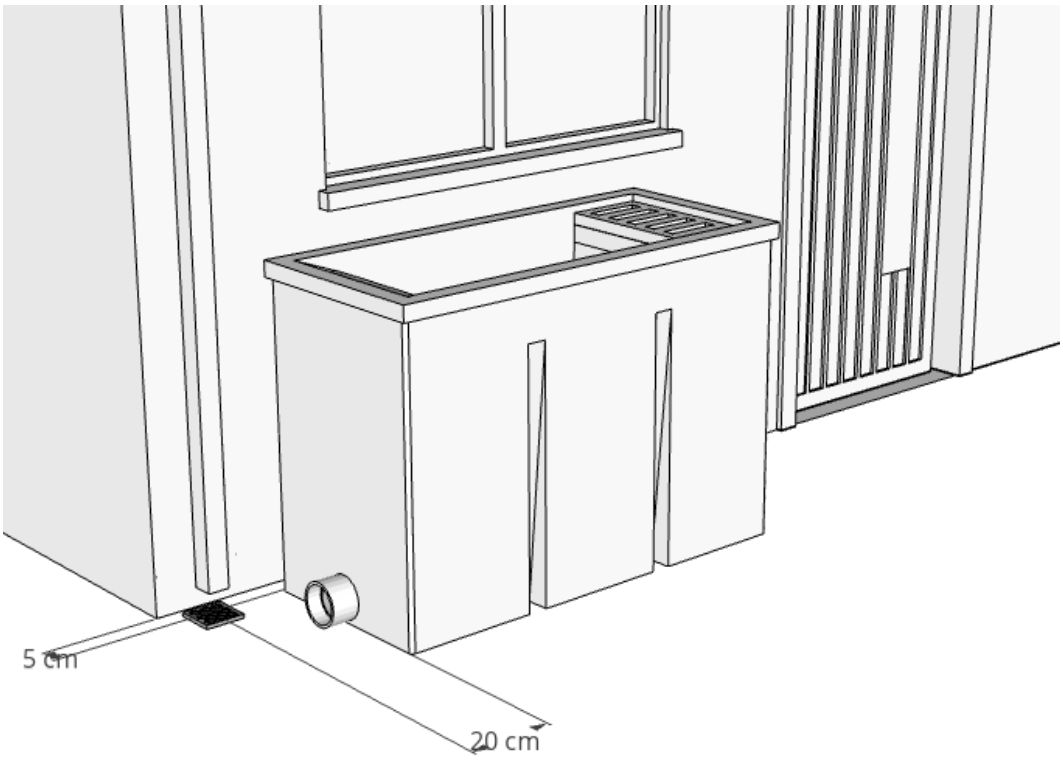

T: +44 (0)1580 830 800
E: enquiries@greenblue.com
W: greenblue.com

MADE IN BRITAIN®

GreenBlue® URBAN
Establishing the future urban landscape

2

Optional levelling frame

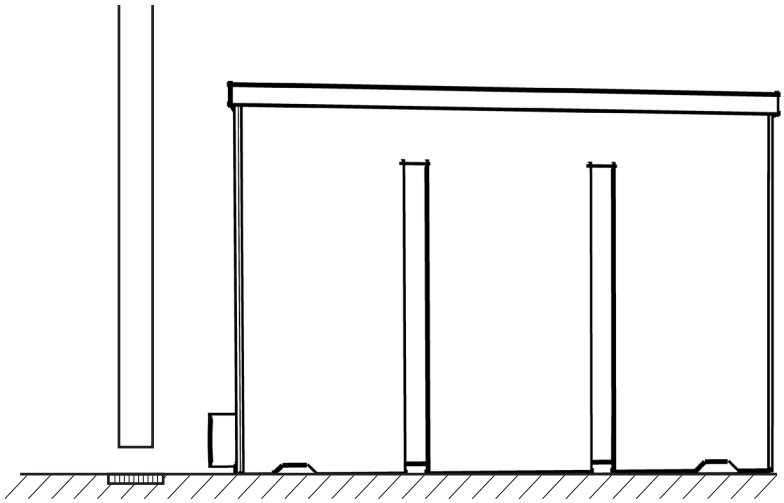

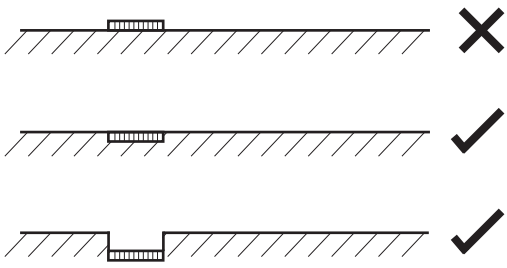

Ensure drain is below level of outflow pipe.

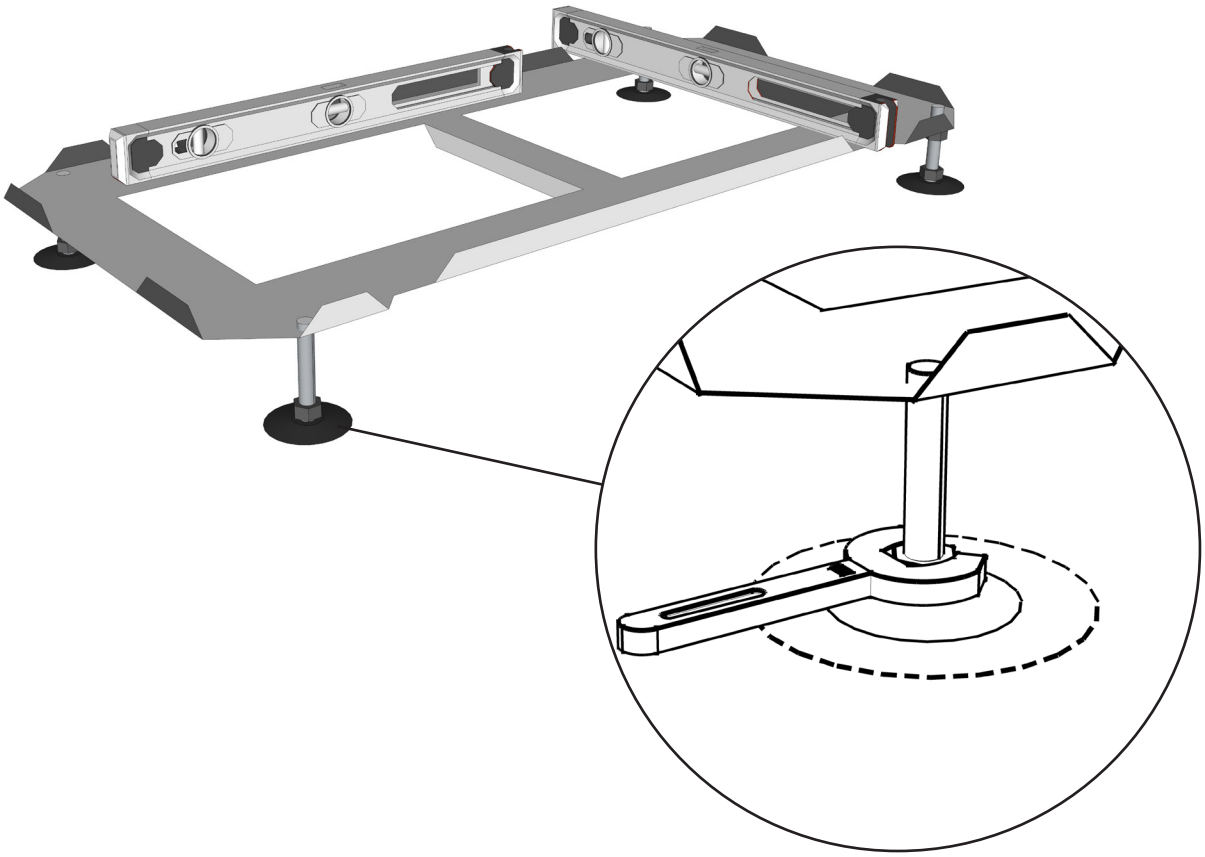

T: +44 (0)1580 830 800
E: enquiries@greenblue.com
W: greenblue.com

MADE IN BRITAIN®

GreenBlue® URBAN

Establishing the future urban landscape

3

Outlet Connections

A.

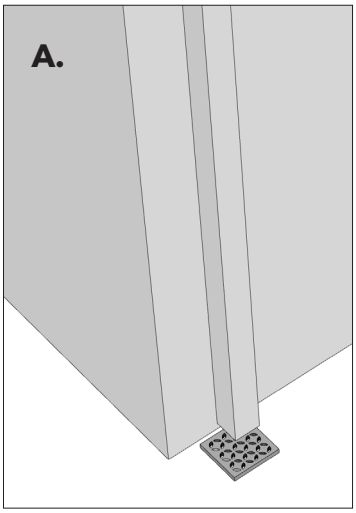

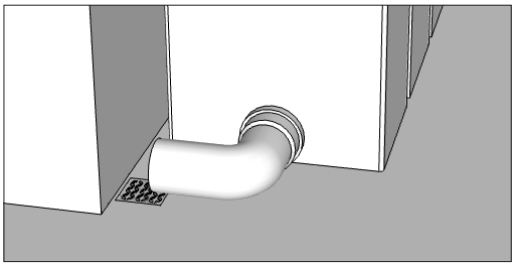

B.

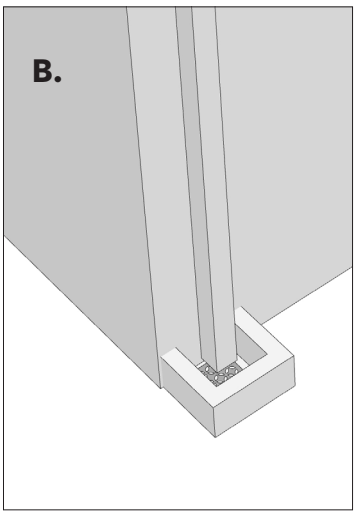

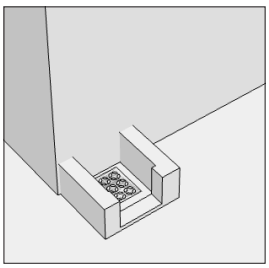

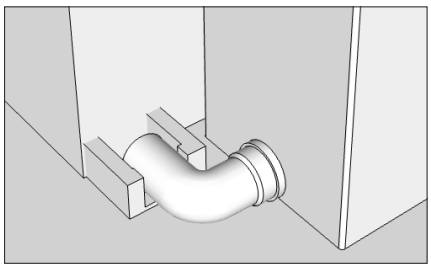

C.

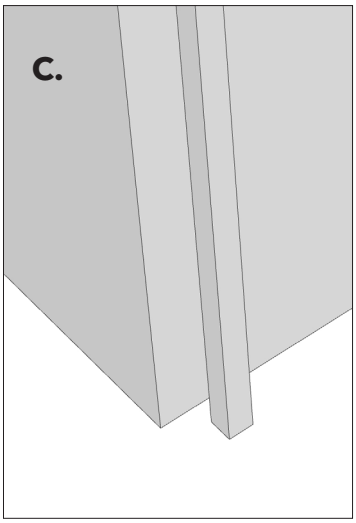

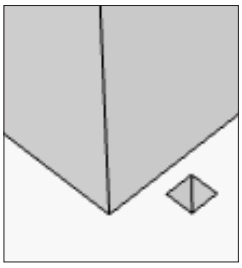

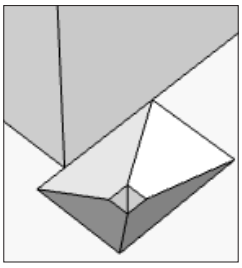

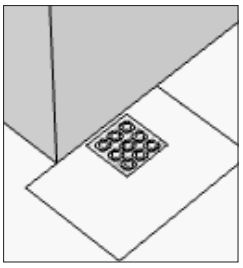

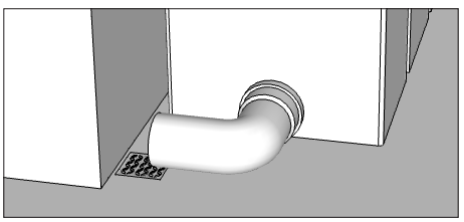

T: +44 (0)1580 830 800
E: enquiries@greenblue.com
W: greenblue.com

MADE IN BRITAIN®

GreenBlue® URBAN
Establishing the future urban landscape

4

Inlet Connections

Check downpipe shape and size - procure correct pipe fittings

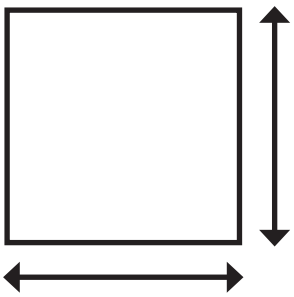

Measure size

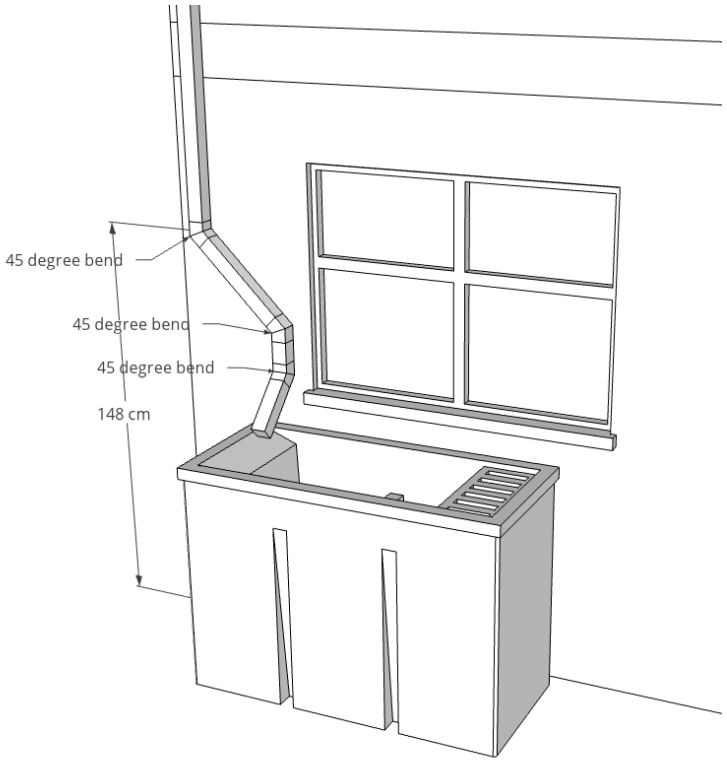

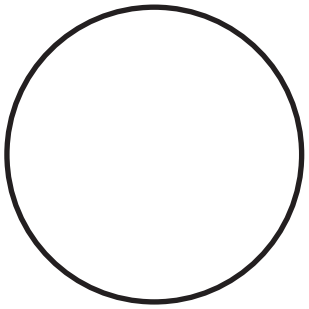

Measure diameter

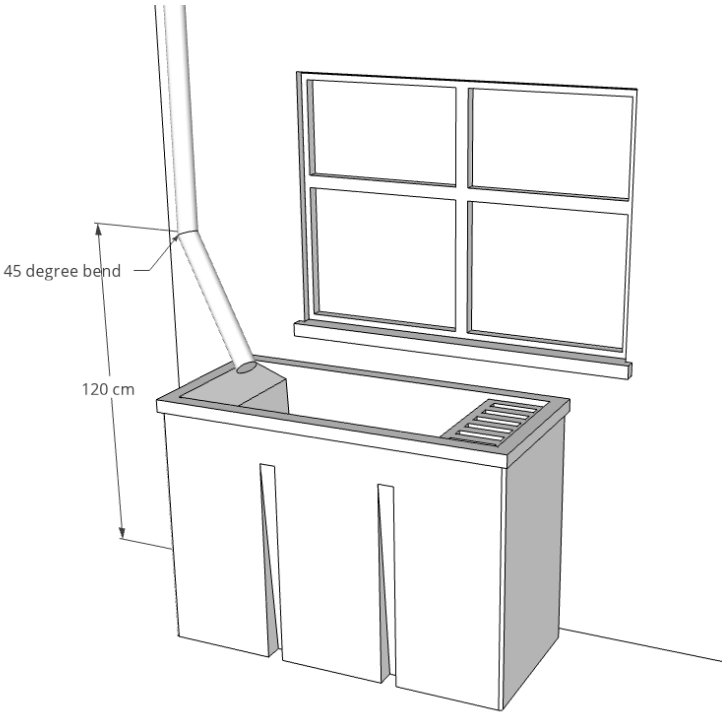

T: +44 (0)1580 830 800
E: enquiries@greenblue.com
W: greenblue.com

MADE IN BRITAIN®

GreenBlue® URBAN
Establishing the future urban landscape

5

Filter block, soil, planting

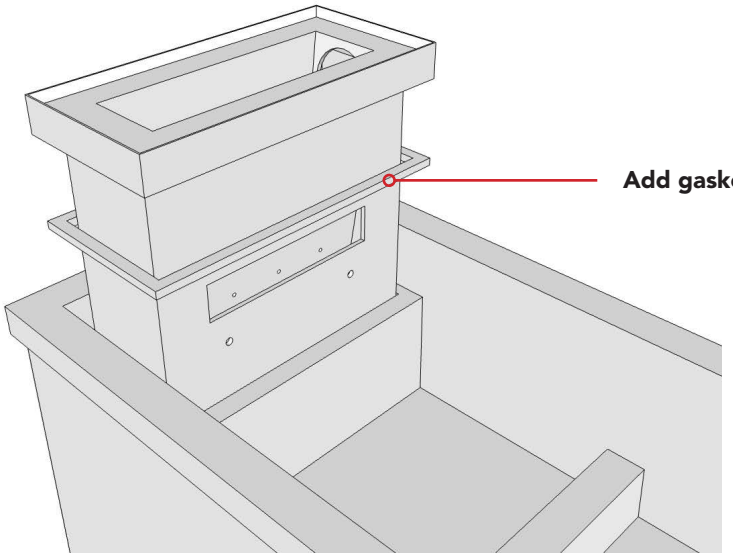

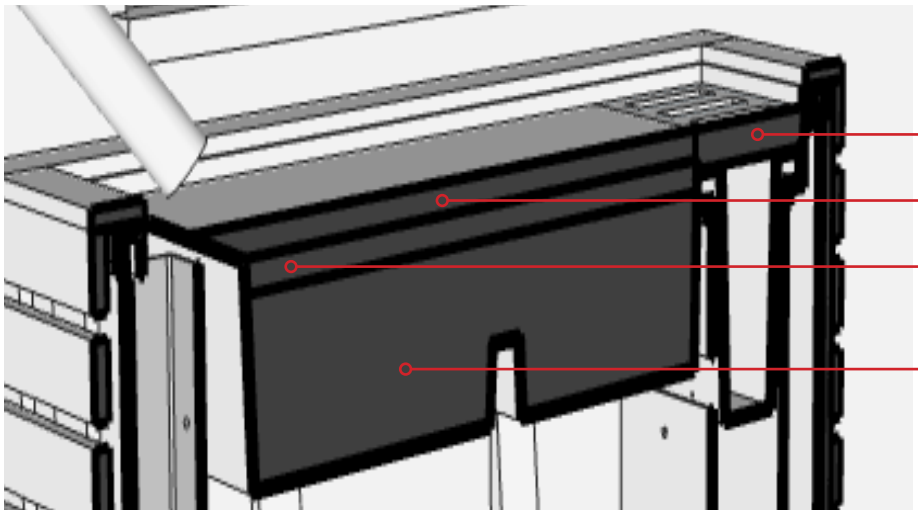



SuDSPod Soil x 3



Gravel x 1



Slate mulch x 1

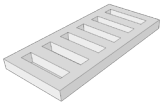

ArboResin Filter Block x 1

T: +44 (0)1580 830 800
E: enquiries@greenblue.com
W: greenblue.com

MADE IN BRITAIN®

GreenBlue® URBAN
Establishing the future urban landscape

6 Cladding

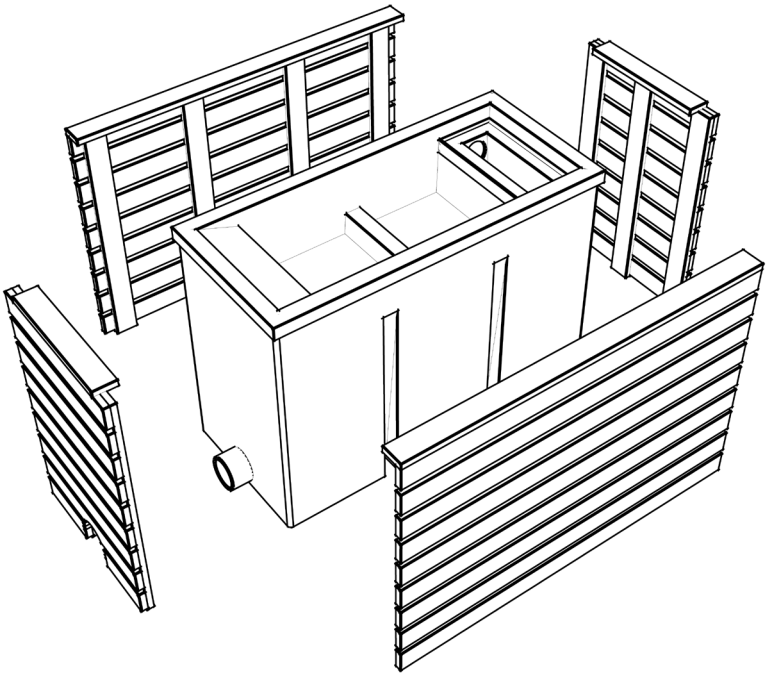

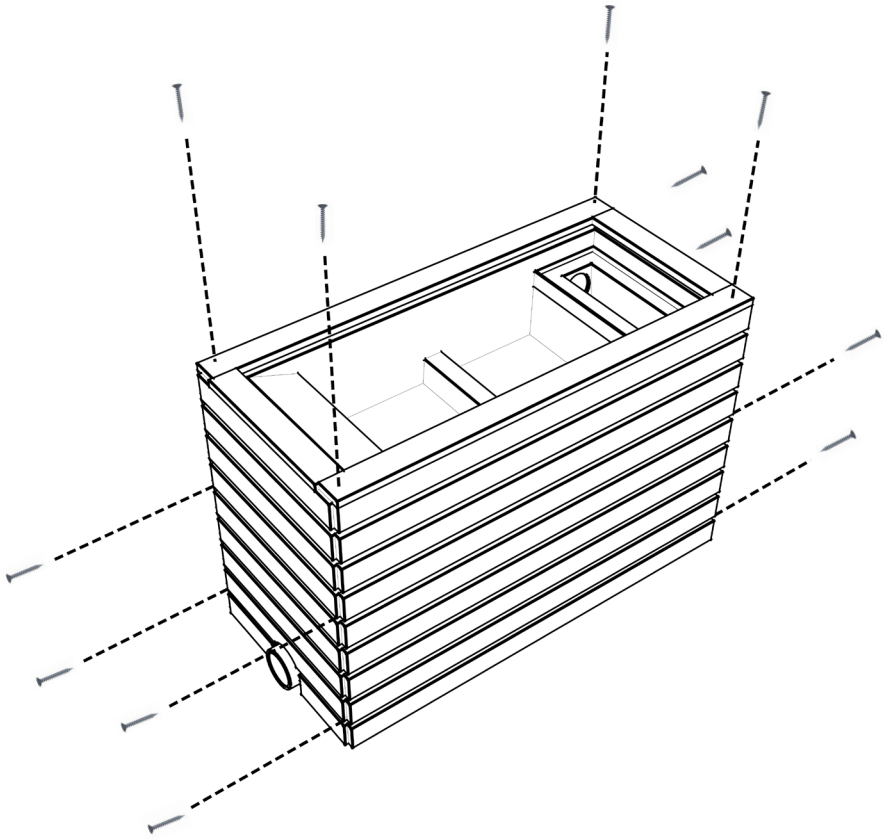

T: +44 (0)1580 830 800
E: enquiries@greenblue.com
W: greenblue.com

MADE IN BRITAIN®

GreenBlue® URBAN
Establishing the future urban landscape

7

Optional if required: ground anchor

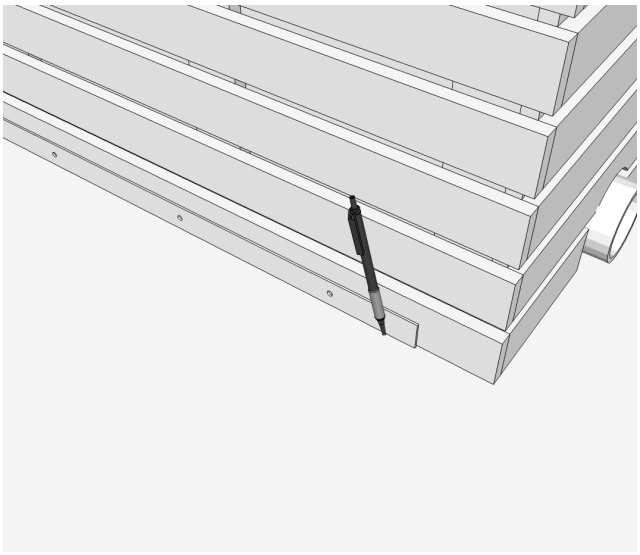

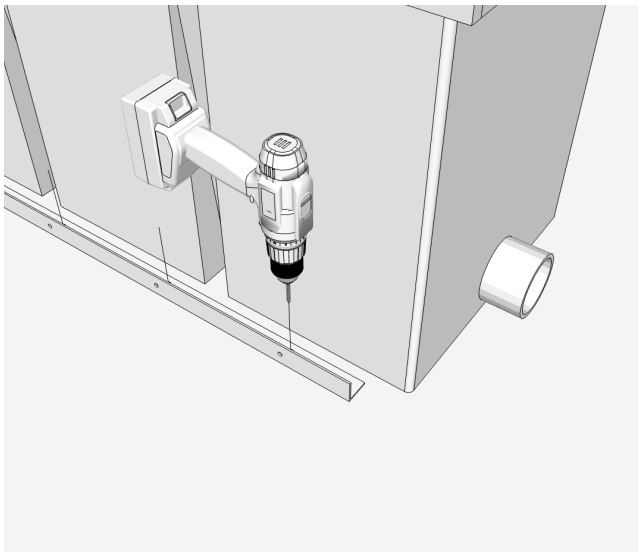

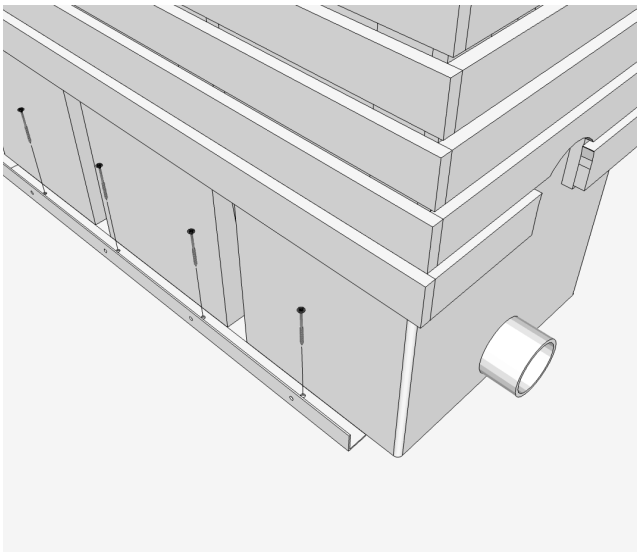

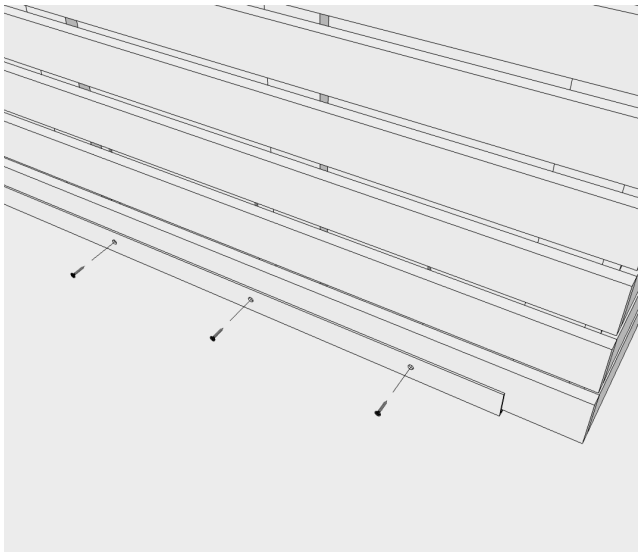

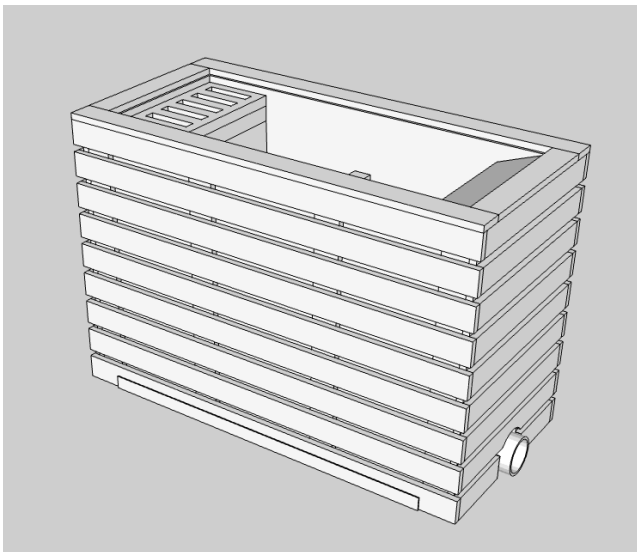

T: +44 (0)1580 830 800
E: enquiries@greenblue.com
W: greenblue.com

MADE IN BRITAIN®

GreenBlue® URBAN
Establishing the future urban landscape