APPLICATION NO:
F/2000/3011

LOCATION:
Natwest 5 Broad Street, Wokingham.

APPLICANT:
Nat West Bank C/O H M A Lts

PROPOSAL:
Proposed installation of 60 cm grey satellite dish.

EARLIEST DATE FOR DECISION: **13/01/2001**

APPLICATION WILL HAVE EXPIRED ON: 01/02/2001

CASE OFFICER: **Emy Circuit**

YSTEMS LTD

SOUTHPORT U.K. Tel.01704-226866 Fax.01704-225814
LONDON OFFICE Tel.020 7377 1777 Fax.020 7247 6181

(EXC)

WOKINGHAM DISTRICT COUNCIL

TOWN AND COUNTRY PLANNING ACTS

Notification of Approval of Permission

Nat West Bank
C/O H M A Ltd
9 Northburgh Street
London
EC1V OAH

Application Number: F/2000/3011

Parish: **WOKINGHAM**

Location: **Natwest 5, Broad Street, Wokingham.**

Proposal: **Proposed installation of 60 cm grey satellite dish.**

The Wokingham District Council in pursuance of their powers under the above Acts and Regulations hereby **Approve Permission** for carrying out the above development in accordance with the application and the accompanying plans submitted to the Council subject to compliance with the following condition, the reason for which is specified hereunder.

Condition
1. The development hereby permitted shall be begun before the expiration of five years from the date of this permission.

Reason
1. In pursuance of Section 91(1) of the Town and Country Planning Act 1990.

Informative
1. You are advised, in compliance with The Town and Country Planning (General Development Procedure) (England) (Amendment) Order 2000, that the following policies and/or proposals in the development plan are relevant to this decision:

South East Area Local Plan Policies STV1, LBE1, LBE2, SBE14, SBE19, SSH33 and PTC7.

Deposit Draft Wokingham District Local Plan Policies WOS2, WOS3, WOS10, WBE1, WBE12, WHE2, WHE15, WSH5, WSH8 and WSH30.

John Mitchell
Development Control Manager
Date: 31/01/2001

Notice checked by: _____

If this notice grants permission to proceed with the proposal the applicant is reminded that it relates to planning permission only and does not constitute approval under any other legislation including Building Regulations.

07. DEC. 2000 3911

Channel Master®

Type 600

.60m RECEIVE-ONLY OFFSET ANTENNA SYSTEM

FEATURES

- One-piece compression-molded offset reflector.
- Sturdy AZ/EL mount with elevation scale.
- Single bolt fine elevation adjustment.
- Single galvanized 1.00" O.D. feed support leg.
- Factory pre-assembled mount.
- Cadmium-plated hardware for maximum corrosion resistance.
- Available with a wide variety of Ku-Band feeds.





APPROVED

The Channel Master® Type 600 Offset Antenna is a rugged commercial grade product suitable for the most demanding applications. The reflector is compression-molded for strength and surface accuracy. Molded into the rear of the reflector is a network of support ribs which not only strengthens the antenna, but also helps to sustain its critical parabolic shape.

The AZ/EL mount is constructed from heavy-gauge steel to provide a rigid support to the reflector. Four heavy-duty lockdown bolts secure the mount to any 2.38" O.D. mast and prevent slippage in high winds. A specially-formulated powder paint process offers excellent protection from weather-related corrosion.

07. DEC. 2000* 3311

Channel Master®

NON-PENETRATING ROOF MOUNTS

Channel Master® non-penetrating roof mounts have been specifically designed for our line of offset reflectors. Mechanically tested and field proven, these fully adjustable mounts meet the performance requirements of demanding commercial applications.

The non-penetrating roof mounts are designed to be used on a flat roof and have provisions for concrete block ballast. The mount components are powder-coated, pre-galvanized steel, with the exception of the 52" x 52" base (see below). All hardware is cadmium-plated with a polymer coating for excellent corrosion resistance.

Model 611617401 has a 2.38" O.D. mast and a 36" x 36" base, which is designed for the .60m and .75m antennas. This model can also be used with .90m and 1.0m antennas with a "hybrid" 2.38" AZ/EL cap when higher windloads are not expected.

Models 611652302/03 utilize a 3.00" O.D. mast and a 52" x 52" base and are designed for the .90m, 1.0m, and 1.2m antennas. Model 611652302 has a powder-coated steel base, while Model 611652303 incorporates a hot-dip galvanized base for extreme environmental conditions.

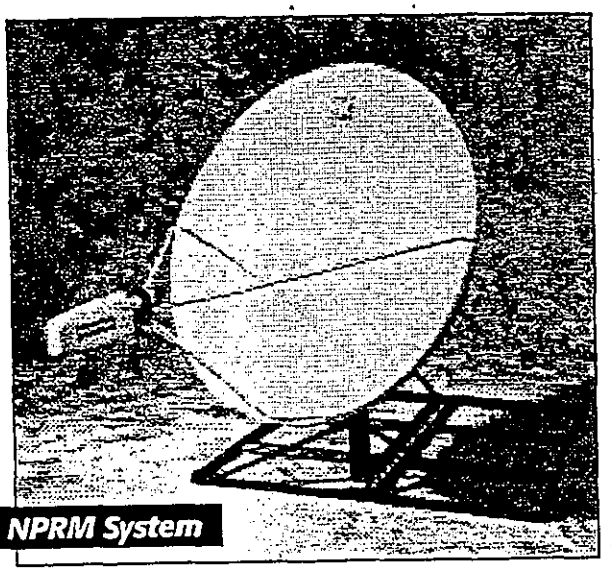

1.2m NPRM System

Specifications

Antenna	Base Dimensions	Mast Dimensions	Maximum Wind Loading	Applicable Model #
.60m	36" x 36" (914 mm x 914 mm)	2.38" (60 mm)	125 mph	611617401
.75m	36" x 36" (914 mm x 914 mm)	2.38" (60 mm)	106 mph	611617401
.90m	36" x 36" (914 mm x 914 mm)	2.38" (60 mm)	89 mph	611617401
.90m	52" x 52" (1321 mm x 1321 mm)	3.00" (76 mm)	125 mph	611652302/03
1.0m	36" x 36" (914 mm x 914 mm)	2.38" (60 mm)	80 mph	611617401
1.0m	52" x 52" (1321 mm x 1321 mm)	3.00" (76 mm)	125 mph	611652302/03
1.2m	52" x 52" (1321 mm x 1321 mm)	3.00" (76 mm)	119 mph	611652302/03

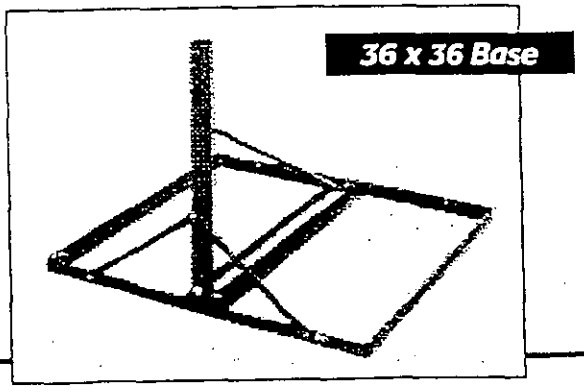

36 x 36 Base

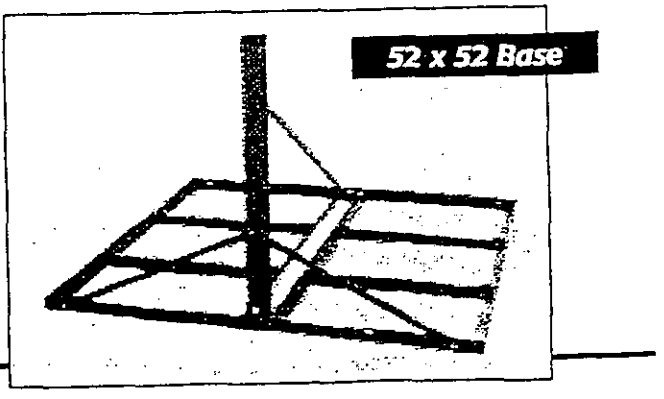

52 x 52 Base

Channel Master®

INTERNATIONAL (USA)
1315 Industrial Park Drive
Smithfield, North Carolina 27577 USA
Customer Sales Center: (919) 989-2205 • Fax: (919) 989-2200
e-mail: cmvsat@cmpc.com http://www.channelmaster.com

EUROPE (UK)
Premier Business Park, Croft Head Road
Blackburn, Lancashire England BB1 5UE
Tel. +44(0) 1254 680444 • Fax +44(0) 1254 672299
e-mail: master@cmuk.u-net.com

ASIA-PACIFIC (TAIWAN)
#12 South First Road, KEPZ
Kaohsiung, Taiwan ROC
TEL (07) 831 4151 • FAX (07) 811 3636

11/98 (17186) Rev. A

APPROVED

Type 600

Channel Master®

.60m RECEIVE-ONLY OFFSET ANTENNA SYSTEM

Specifications

RF PERFORMANCE

Effective Aperture	.60m (24 in.)
Operating Frequency	10.95 - 12.75 GHz
Polarization	Linear (Circular Optional)
Gain @ 11.95 GHz	36.1 dBi (Typical)
B Beamwidth	3.2°
Antenna Noise Temperature @ 30° Elevation	32°K (Typical)
VSWR	1.3:1 Max.
Cross-Polarization Discrimination (Linear)	>30 dB On Axis
Feed Interface	WR-75

MECHANICAL PERFORMANCE

Reflector Material		Glass Fiber Reinforced Polyester
Antenna Optics		One-Piece Offset Feed Prime Focus
Mount Type		Elevation over Azimuth
Elevation Adjustment Range		10°-70° Continuous Fine Adjustment
Azimuth Adjustment Range		360° Continuous
Mast Pipe Interface		2.38 Inch (60 mm) Diameter
Wind Loading	Operational	50 Mi/h
	Survival	125 Mi/h
Temperature		-50°C to 80°C
Humidity		0 to 100% (Condensing)
Atmosphere		Salt, Pollutants and Contaminants as Encountered in Coastal and Industrial Areas
Solar Radiation		360 BTU/h/ft²
Shock and Vibration		As Encountered During Shipping and Handling

Channel Master®

INTERNATIONAL (USA)
1315 Industrial Park Drive
Smithfield, North Carolina 27577 USA
Customer Sales Center: (919) 989-2205 · Fax: (919) 989-2200
e-mail: cmvsat@cmnc.com http://www.channelmaster.com

EUROPE (UK)
Premier Business Park, Croft Head Road
Blackburn, Lancashire England BB1 5UE
Tel. +44(0) 1254 680444 · Fax +44(0) 1254 672299
e-mail: master@cmuk.u-net.com

ASIA-PACIFIC (TAIWAN)
#12 South First Road, KEPZ
Kaohsiung, Taiwan ROC
TEL (07) 831 4151 · FAX (07) 811 3636

Printed in U.S.A. 11/98 (17178) Rev. A

WORK SHEET FOR : Emy Circuit

Application Number : F/2000/3011

Applicant : Nat West Bank C/O H M A Lts.

Location : Natwest 5, Broad Street, , Wokingham.
Proposal : Proposed installation of 60 cm grey satellite dish.

Site Notice Displayed ? :	YES	NO	DATE
		✓	2/1/01

Date of Neighbour Notifications : .....

Date of Site Visit : .....2 January 2001.....

Date Registered : 07/12/2000

Earliest Date for Decision : 13/01/2001

Latest Consultation Date/Site Notice Expiry Date : 13/01/2001

This application will have expired on: 01/02/2001. You need to make a decision 1 day prior to this date for this application to count as determined in less than 8 weeks.

Consultation Responses :

Conservation – not listed but prominent location, no impact on public view points

Wokingham Town Council – "no objections"

Planning Issues :

Town centre / conservation area – impact on character.

F/2000/3011
Natwest, 5 Broad Street, Wokingham

Appraisal: The application is for erection of a 60 cm, grey plastic satellite dish with an aluminium wall mount. The bank building, which is located in a prominent position, within the Wokingham Town Centre Conservation Area, comprises of an older property with a modern extension. The extension has a flat roof, screened by pitched sections along the Broad Street and Rose Street Frontages. The dish would be located on the side of the older part of the building and would be screened on three sides by the existing building. Very limited views are possible from the rear car parking area but not from further away, and therefore, the dish would not have an unacceptable impact on the surrounding area.

Recommendation: conditional approval

Application Number F/2000/3011
Conditions/~~Reasons for Refusal~~

No	Std Con	Std Reas	Non Std Conditions / Reasons for Refusal
01	C001	R001	

RECORD OF SITE VISIT

SITE ADDRESS: Natwest 5 Broad Street Wokingham.

APPLICATION NUMBER: F/2000/3011

OFFICER: Emy Circuit

DATE OF SITE VISIT: 2Jan '01

1 SITE/STATUTORY NOTICE DISPLAYED ? No

2. DESCRIPTION OF SURROUNDINGS

Town/Retail centre

3. DESCRIPTION OF SITE/BUILDING

Prominent location at junction of Rose St/Broad St + the Market Place - proposed location (dish appears to already be in place) would make unobtrusive - only visible from certain points within near car park.

4. RELATIONSHIP TO ADJOINING PROPERTIES

N/A

5. SITE CONSTRAINTS

TREES

ACCESS/PARKING

LEVELS

BOUNDARY TREATMENT

OTHERS

Tel: (0118) 974 6479

Date: 17 January 2001

My ref: F/2000/3011

Environmental Services Department
Planning Services
P.O. Box 157
Shute End, Wokingham
Berkshire RG40 1WR
Tel: (0118) 974 6000
Fax: (0118) 974 6484
Minicom No: (0118) 974 6991
DX: 33506 – Wokingham

CONFIDENTIAL

Councillor M Robertson
47 Proctors Road
Wokingham
RG40 1RP

Dear Councillor

Application Number: F/2000/3011
Natwest 5, Broad Street, , Wokingham.
Proposed installation of 60 cm grey satellite dish.

I write to let you know that the above mentioned application has been recommended for APPROVAL: ☑ REFUSAL: ☐ under delegated powers.

If you have any questions please do not hesitate to contact **Emy Circuit** on **(0118) 974 6479**. If you then feel the application needs to be transferred to the next available Development Control Committee for decision please fill in the form below.
This form must be received no later than 29 January 2001

Yours faithfully

John Mitchell
Development Control Manager

LISTING FORM

Case officer: **Emy Circuit** Application Number: **F/2000/3011**
Natwest 5, Broad Street, , Wokingham.
Proposed installation of 60 cm grey satellite dish.

Transfer: Yes ☐ No ☐
Reason for Transfer:

_____

_____

Signed: _____ Date: _____

Councillor M Robertson

NB. It would be helpful for speedy decision making if you could respond, even if you do not wish this application to be transferred.

Tel: (0118) 974 6479

Date: 17 January 2001

My ref: F/2000/3011

Environmental Services Department
Planning Services
P.O. Box 157
Shute End, Wokingham
Berkshire RG40 1WR
Tel: (0118) 974 6000
Fax: (0118) 974 6484
Minicom No: (0118) 974 6991
DX: 33506 – Wokingham

CONFIDENTIAL

Councillor P Edwards
30 Mays Road
Wokingham
RG40 1RW

Dear Councillor

Application Number: F/2000/3011
Natwest 5, Broad Street, , Wokingham.
Proposed installation of 60 cm grey satellite dish..

I write to let you know that the above mentioned application has been recommended for APPROVAL: ☑ REFUSAL: ☐ under delegated powers.

If you have any questions please do not hesitate to contact **Emy Circuit** on **(0118) 974 6479**. If you then feel the application needs to be transferred to the next available Development Control Committee for decision please contact the Councillor for your area responsible for planning matters as soon as possible

Yours faithfully

John Mitchell
Development Control Manager

Tel: (0118) 974 6479

Date: 17 January 2001

My ref: F/2000/3011

Environmental Services Department
Planning Services
P.O. Box 157
Shute End, Wokingham
Berkshire RG40 1WR
Tel: (0118) 974 6000
Fax: (0118) 974 6484
Minicom No: (0118) 974 6991
DX: 33506 – Wokingham

CONFIDENTIAL

Councillor I Brown
12 Paice Green
Wokingham
RG40 1YN

Dear Councillor

Application Number: F/2000/3011
Natwest 5, Broad Street, , Wokingham.
Proposed installation of 60 cm grey satellite dish..

I write to let you know that the above mentioned application has been recommended for APPROVAL: ☑ REFUSAL: ☐ under delegated powers.

If you have any questions please do not hesitate to contact **Emy Circuit** on **(0118) 974 6479**. If you then feel the application needs to be transferred to the next available Development Control Committee for decision please contact the Councillor for your area responsible for planning matters as soon as possible

Yours faithfully

John Mitchell
Development Control Manager

WOKINGHAM TOWN COUNCIL CONSULTATION SHEET

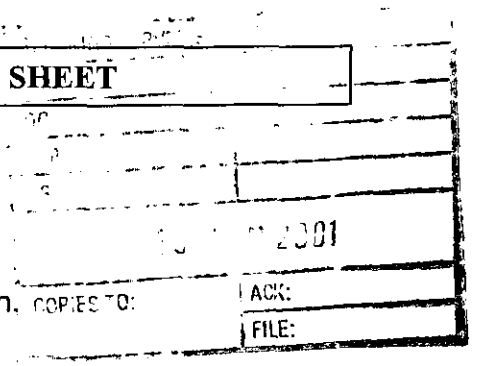

Case officer: Emy Circuit

Application Number: F/2000/3011

Proposal: Proposed installation of 60cm grey satellite dish.

Site Address: Nat West 5, Broad Street, Wokingham

Applicant: NatWest Bank C/O H M A Ltd

Your observations are required in respect of this application **by 13/01/2001**

No objections

SIGNED: _____ **DATE:** 17/01/2001

CLERK TO Wokingham Town Council

[redacted]

21 DEC 2000

To:
Harold Sanders
Urban Design And Conservation Officer

From: Emy Circuit

Date: 20 December 2000

Application Number: F/2000/3011

Proposal: Proposed installation of 60 cm grey satellite dish..

Site Address:
Natwest 5, Broad Street, , Wokingham.

Applicant:
Nat West Bank C/O H M A Lts.

Your observations are required in respect of this application within **7 days** of the above date.

THE SATELLITE DISH APPEARS TO BE LOCATED IN A VISUALLY SENSITIVE LOCATION, WITH NO IMPACT ON THE ADJOINING PUBLIC VIEWPOINTS WITHIN ROSE STREET OR MARKET PLACE.

THE BANK IS NOT A LISTED BUILDING BUT IN A PROMINENT LOCATION AT THE JUNCTION OF BROAD STREET AND ROSE STREET.

I HAVE NO OBJECTION TO THE PROPOSAL.

Harold Sanders.
CONSERVATION + DESIGN
03.01.01.

Wokingham District Council
Planning Application

Town and Country Planning (General Development Procedure) Order 1995 – Notice under Article 8

AND/OR

Planning (Listed Buildings and Conservation Areas) Regulations 1990 and Planning (Listed Buildings and Conservation Areas) Act 1990

Application No: F/2000/3011

Proposal:
Proposed installation of 60 cm grey satellite dish.

Location:
Natwest 5 Broad Street Wokingham

This application is being advertised in the Wokingham Times newspaper on the 10/01/2001 for the following reason(s);

SITE IS IN A CONSERVATION AREA

The application can be inspected at Wokingham District Council's offices during the following times:

PLANNING DEPARTMENT, SHUTE END, WOKINGHAM TEL (0118) 974 6428
8.30 - 5.00 *Monday - Thursday & 8.30 - 4.00 Friday*

WOODLEY LIBRARY HEADLEY ROAD WOODLEY (9.30am - 7.00pm Mon, Thurs & Fri. 9.30am - 5.00pm Tues, 9.30am - 1.00pm Saturday. closed all day Wednesday)

Comments should be sent in writing QUOTING THE APPLICATION NUMBER to the Case Officer Emy Circuit P.O. Box 157 Council Offices, Shute End, Wokingham, Berkshire, RG40 1WR to arrive before **31/01/2001**. Written comments submitted will become available for public inspection.

In view of the very large number of planning applications and letters of comment received, it will not be possible for an individual reply to observations made. However any comments will be taken into account when the application is determined and you will be notified of the decision.

Date: 10/01/2001

Un window (Broad St) with orange fn 9/1/01

Received by Wokingham District Council

Application No: F/2000/3011

Proposal:
Proposed installation of 60 cm grey satellite dish.

Location:
Natwest 5, Broad Street, , Wokingham.

The application is available for inspection at Wokingham District Council's offices during the following times:

PLANNING DEPARTMENT, SHUTE END, WOKINGHAM TEL (0118) 974 6428
8.30 - 5.00 Monday - Thursday & 8.30 - 4.00 Friday

WOODLEY LIBRARY HEADLEY ROAD WOODLEY (9.30am - 7.00pm Mon, Thurs & Fri. 9.30am - 5.00pm Tues, 9.30am - 1.00pm Saturday. closed all day Wednesday). If you intend to view this application at Woodley Library (see details above) please allow 4 days from the date of this notice for delivery of plans.

Comments should be sent in writing QUOTING THE APPLICATION NUMBER to the Case Officer Emy Circuit P.O. Box 157 Council Offices, Shute End, Wokingham Berkshire, RG40 1WR to arrive on or before 13/01/2001. Written comments submitted will become available for public inspection.

In view of the very large number of planning applications and letters of comment received, it will not normally be possible for an individual reply to observations made. However any comments will be taken into account when the application is determined and you will be notified of the decision.

Head Planning and Transportation

20 December 2000

WOKINGHAM D.C. DEVELOPMENT CONTROL

Start date:	07 DEC [illegible]
Officer: EXC	Application No. F/2000/3011

Map No. 75B Site 005

Easting: ..... Flood Pln .....

Northing: ..... Mineral .....

Level: ☐ **Sub Committee** ☑ **Delegated** ☐ **Sec. State**

☐ **Incorrect Fee** ☐ **Invalid** ☐ **PD**

Description:

(F.) PROPOSED INSTALLATION OF 60CM GREY SATELLITE DISH

Location: 5 BROAD STREET

Parish: WOKINGHAM Ward: Norreys

Applicant: NAT WEST BANK

Fee Received 95-00 Required ..... Additional ..... Refund .....

(1)

Enforcement Section to be notified ☐ tick if required

Additional information required for validation

		Reason	Requested	Received
1	1:2500 OS location plan showing property edged in blue/red			
2	1:500 block plan showing existing & proposed dev. + adj. Properties	Scale?		
3	Forms unsigned			
4	Correct S 66 certificate			
5	Elevation plans			
6	Floor plans			
7	Metric scale disclaimer			
8	Encroachment letter			
9	Miscellaneous			

APPLN NO. _____

ACTION REQUIRED BY DEVELOPMENT CONTROL

Conservation Area: Wokingham

Listed Building: 1 2 2*

Advertisement Required: Non-listed Bdg in Cons Area

Date Site Notice Sent : ..... Parish Council Informed - YES / NO

INTERNAL CONSULTATIONS

Building Control .....
Landscape .....
Trees .....
Conservation Officer .....
Environmental Health .....
Housing .....
Leisure & Cultural services .....
Public Rights of Way .....
Property .....
District Secretary (only if called in by SOS) .....
Policy & Plans .....
Strategic Planning (JSPU) .....
Minerals (INTERNAL) .....
Archaeological Site (BABTIE) : .....
Education .....
Social Services .....
Highways .....

EXTERNAL CONSULTATIONS

Adjacent D P A : .....
Adjacent Parish : .....
Southern Electricity Board .....
British Gas .....
PSA Oil Pipeline .....
Transco : .....
Environment Agency .....

Rail Track .....
Police Arch. Liaison Officer .....

HERITAGE BODIES

The Georgian Group .....
Ancient Monuments Society .....
Council for British Arch. .....
RCHME .....
Telecommunications (NRPB) : .....
Sport England : .....

OTHERS:

.....
.....
No pre-apps.

NEIGHBOURS:

S/N + see map
+ Natwest Bank, 5 Broad Street, Wokingham (within red line)

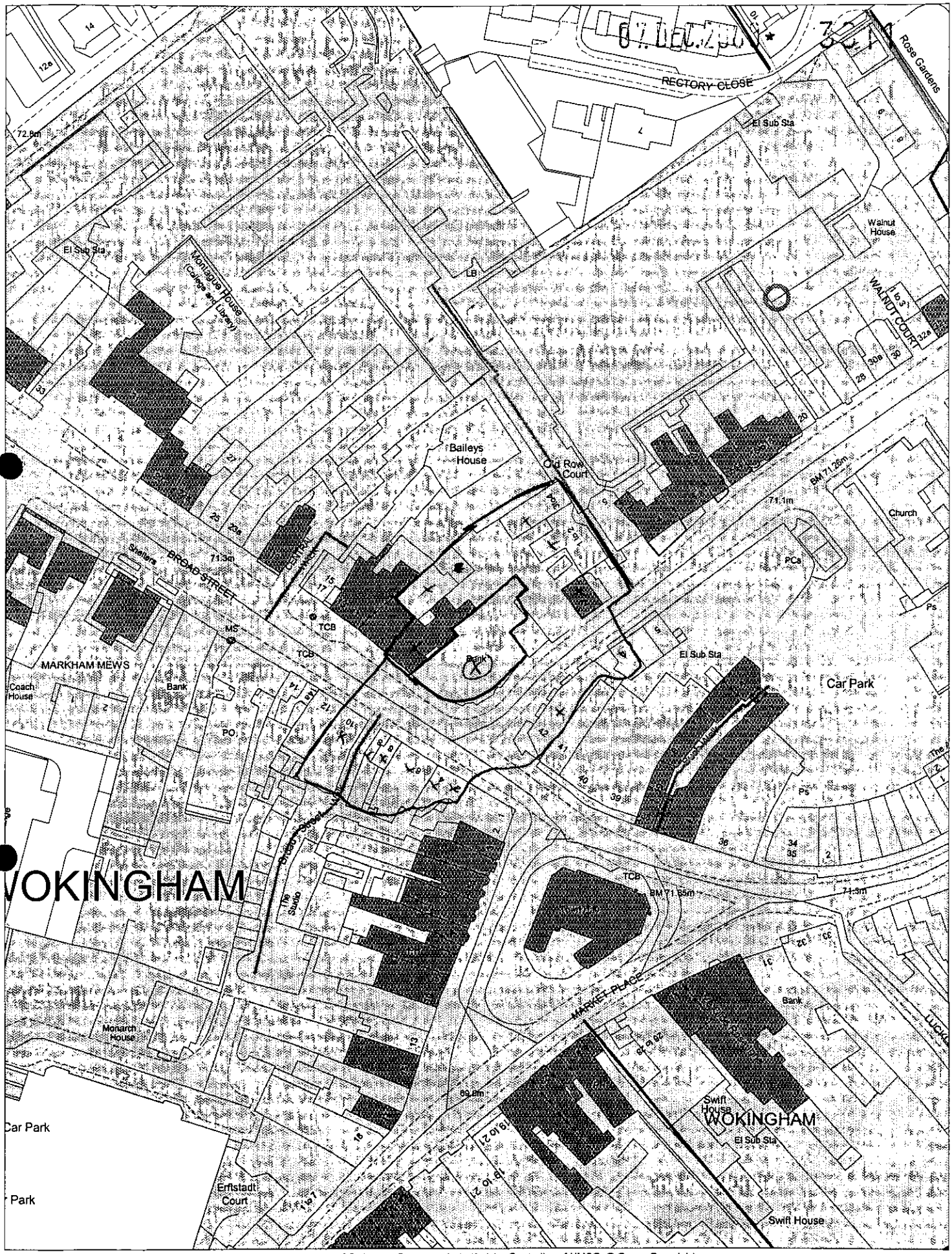

This map is based upon Ordnance Survey material with the permission of Ordnance Survey on behalf of the Controller of HMSO. © Crown Copyright.
Unauthorised reproduction infringes Crown Copyright and may lead to prosecution or civil proceedings.Wokingham District Council Licence LA086134

Development Control Section, Environmental Services, Wokingham District Council.

15 December 2000

Scale: 1 : 1250

N W E S

07 DEC 2000* 3011

HMA
A Satellite & Data Comms Company

The District Planning Officer
Planning Department
Wokingham District Council
PO Box 157
Council Offices
Shute End
Wokingham
Berkshire
RG40 1WR

December 4th 2000

Our ref: NatWest Bank, 5 Broad Street, Wokingham, Berkshire, RG11 1AX (ZNWBW)

Dear Sir/Madam,

Re. Installation of 60cm Satellite Antenna for Improved Banking Services

HMA Ltd is a company contracted by British Telecom (Broadcast Services) to install cabling and satellite services for the provision of a Business Television Network (BTV), to improve On-line banking, communications and distance learning for its customers and NatWest Bank employees.

HMA Ltd are a company that specializes in the Installation of satellite telecommunication development equipment for business applications. It would be our prime intention to minimize the impact of the dish by integrating the antenna into the architectural design of the building, with particular reference to the roof profile, installing in such a location that it does not materially harm the external appearance of the building upon which it is installed.

I enclose an application form for the Installation of a 60cm Satellite Antenna and a cheque for £95 re. Local Authority fee the above named application.

I trust this application is in line with your Planning guidelines and look forward to hearing from you soon.

Yours faithfully,

P.P Pat Howe
Planning Co-ordinator

1789/a

SECTION 66 CERTIFICATE

Application No.

07 DEC 2000*

Please fill in both Certificate A, B, C or D and the Agricultural Holdings Certificate. Delete sections not relevant.

CERTIFICATE A

I certify that:

at the beginning of the period of 21 days ending with the date of the accompanying application, nobody, except the applicant, was the owner of (a) of any part of the land to which the application relates.

(a) "Owner" means a person having a freehold interest or leasehold interest the unexpired term of which is not less than 7 years.

OR

CERTIFICATE B

I certify that:

- I have/The applicant has* given the required notice to everyone else who, at the beginning of the period of 21 days ending with the date of the accompanying application was the owner (a) of any part of the land to which the application relates, as listed below:

Owner's(a) name	Address at which notice was served	Date on which notice was served

+ See Note (a) to Certificate A

OR

CERTIFICATE C

I certify that

- I/The applicant* cannot issued a certificate in accordance with either paragraph (a) or paragraph (b) of Section 66(1) of the Act in respect of the accompanying application.

- I have/The applicant has* given the required notice to the persons specified below, being persons who at the beginning of the period of 21 days ending with the date of the application were owners (a) of any part of the land to which the application relates.

Owner's(a) name	Address at which notice was served	Date on which notice was served

(b) Insert description of steps taken.

- I have/The applicant has* taken all reasonable steps open to me/him/her* to find out the names and addresses of the other owners (a) of the land, or of a part of it, but have/has* been unable to do so. These steps were as follows:

  (b) .....

  .....

(c) Name of local newspaper circulating in the area where the land is situated.

(d) Date of publication (which must be not earlier than the beginning of the period of 21 days ending with the date of the application).

- Notice of the application as attached to this Certificate, has been published in the (c) .....

  on (d) .....

1789/b

CERTIFICATE D

I certify that

● I/The applicant cannot issue a certificate in accordance with paragraph (a) of Section 66 of the Act in respect of the accompanying application.

OR

● I/The applicant have/has taken all reasonable steps open to me/him/her to find out the names and addresses of everyone else who, at the beginning of the period of 21 days beginning with the date of application was the owner (a) of any part of the land to which the application relates, but have/has been unable to do so. These steps were as follows: :

(b) Insert description of steps taken

(b) . . . . . .

. . . . . .

(c) Insert name of local newspaper circulating in the area where the land is situated.

● Notice of the application as attached to this Certificate, has been published in the (c) . . . . . .

(d) Insert date of publication (which must not be earlier than the beginning of the period of 21 days ending with the date of the application).

on (d) . . . . . .

ALL APPLICANTS MUST COMPLETE THIS SECTION

Agricultural Holdings Certificate

If any of the site is part of an area of land which is let or there is an agreement to let the land for agricultural purposes to a tenant, it may be an agricultural holding. Further advice may be obtained from the Department.

One or other section must be crossed through as not applicable.

If the applicant is the sole agricultural tenant he or she must delete the first alternative and insert "not applicable" as the information required by the second alternative.

● None of the land to which the application relates is, or is part of, an agricultural holding.

OR

● I have/The applicant has given the required notice to every person other than my/him/herself who, at the beginning of the period of 21 days ending with the date of the application, was a tenant of an agricultural holding on all or part of the land to which the application relates, as follows:

Tenant's name	Address at which notice was served	Date on which notice was served

Signed K. Cook

On behalf of NATWEST

Date 4.12.00

TOWN AND COUNTRY PLANNING ACT, 1990
TOWN & COUNTRY PLANNING GENERAL DEVELOPMENT ORDER 1988
Certificate under Section 66

1769a

WOKINGHAM DISTRICT COUNCIL
PLANNING APPLICATION

07. DEC. 2000 PART 3011

APPLICATION FOR PERMISSION TO CARRY OUT DEVELOPMENT - TOWN AND COUNTRY PLANNING ACTS

Please answer ALL QUESTIONS in BLOCK LETTERS. If a question is not applicable, answer N/A in space. Please submit SIX copies of this form and plans to:-

THE DISTRICT PLANNING OFFICER
WOKINGHAM DISTRICT COUNCIL
PLANNING DEPARTMENT
P O Box No. 157
COUNCIL OFFICES
SHUTE END
WOKINGHAM
BERKSHIRE. RG40 1WR

FOR OFFICE USE ONLY

1. APPLICANT'S NAME: NATWEST BANK
ADDRESS: 135 BISHOPSGATE
LONDON
POST CODE: EC2M 3UR PHONE:

2. If the applicant has an agent, all correspondence will be sent to the agent
AGENT'S NAME: HHA LTD
ADDRESS: 9 NORTHBURGH STREET
LONDON
POST CODE: EC1V 0AH PHONE: 020 7659 5868

3. On the plans show the SITE outlined in RED Show also OTHER land in the applicant's ownership or control in BLUE.
SITE LOCATION: 5 BROAD STREET, WOKINGHAM, BERKSHIRE, RG11 1AX

4. WHAT IS THE APPLICATION FOR ? Give brief details and state for what purpose this site and any buildings will be used.
INSTALLATION OF 60CM GREY SATELLITE DISH

5. Give the area in hectares or part of a hectare
AREA OF SITE

6. State the applicant's interest in the land e.g. owner, prospective purchaser, lessee
OWNER

7. List all the plans and drawings submitted with the application
PLANS/DRAWINGS: 2100810 1-4

8. DOES THE APPLICATION INVOLVE *ANY OF THE FOLLOWING ?*
Tick the boxes(x)

CHANGE OF USE
REDEVELOPMENT
ERECTION OF NEW BUILDING
ALTERATION or EXTENSION ✓

9. WHAT TYPE OF APPLICATION IS THIS ? Tick one box only

OUTLINE PERMISSION — See question 10
FULL PERMISSION ✓
APPROVAL OF DETAILS/RESERVED MATTERS — State relevant outline permission number Also complete Question 10
TEMPORARY PERMISSION — State period required
RELAXATION OF CONDITIONS — State relevant application number Conditions to be relaxed

10. IF THIS IS AN OUTLINE APPLICATION OR AN APPROVAL OF RESERVED MATTERS, which details, if any, do you wish to be considered as part of this application ?

SITING
EXTERNAL APPEARANCE
DESIGN
MEANS OF ACCESS
LANDSCAPING

07 DEC 2000* 3011

1769b

11. WHAT IS THE EXISTING USE OF THE LAND AND/OR BUILDING(S) e.g. residential, industrial, etc. If the site is vacant say so, and also state its previous use and when that ceased.

BANK

12. DOES A PUBLIC RIGHT OF WAY CROSS OR ABUT THE SITE OR THE PROPOSED ACCESS?

~~YES~~/NO — If yes, show existing route(s) and any proposed alternatives on the plans

13. ARE THERE ANY TREES ON THE SITE? IF YES, ARE ANY TO BE FELLED?

~~YES~~/NO — If yes, please show their positions, spread and species on the plans and which, if any, are to be felled.

14. STATE EXTERNAL MATERIALS TO BE USED.

60CM GREY PLASTIC CHANNEL
MASTER SATELLITE DISH
ALUMINIUM WALL MOUNT

15. HOW WILL THE SITE BE ENCLOSED?
Say whether walls, fences or hedges, and give height, colour and materials. If the site is divided into plots, say how each is to be enclosed.

16. HOW WILL SURFACE WATER BE DISPOSED OF?

17. HOW WILL FOUL SEWAGE BE DISPOSED OF?

To existing system YES/~~NO~~

If no, please give details

18. WHAT ARE THE ACCESS ARRANGEMENTS?
AS EXISTING
AS PROPOSED
Give details of pedestrian and vehicular access

19. HAS PROVISION BEEN MADE FOR THE DISABLED?
See notes for applicants

20. IF THIS PROPOSAL INVOLVES RESIDENTIAL DEVELOPMENT OR THE LOSS OF RESIDENTIAL UNITS, COMPLETE THE FOLLOWING TABLE

	No. OF DWELLINGS/HABITABLE ROOMS PROPOSED		TO BE RETAINED		TO BE LOST	
HOUSE	/	*	/	*	/	*
BUNGALOW	/	*	/	*	/	*
FLAT/MAISONETTE	/	*	/	*	/	*
OTHER	/	*	/	*	/	*

* STATE No. OF HABITABLE ROOMS

21. DOES THE PROPOSAL INVOLVE ANY NON-RESIDENTIAL BUILDING OR USE?

YES/NO — If YES, complete Part 2 of the form

22. DOES THE PROPOSAL INVOLVE THE WINNING, WORKING OR PROCESSING OF MINERALS; THE DISPOSAL OF MINERAL WASTE, OR THE DEPOSIT OR PROCESSING OF REFUSE AND WASTE MATERIALS?

~~YES~~/NO — If YES, please ask for and complete Part 3 of the form

23. STATE THE FEE ENCLOSED WITH THIS APPLICATION
The current scale of fees is enclosed. If you believe a reduced fee or no fee is payable, say why.

£95

I hereby apply for permission in respect of the particulars described above and in the attached plans and drawings. If planning permission is granted, the development must be carried out strictly in accordance with the approved plans. Failure to do so could result in enforcement action being taken. Permission under the Town & Country Planning Acts does not obviate the possible need to apply for Building Regulations approval.

SIGNED h. Clark ON BEHALF OF NATWEST DATE 4.12.00

Before submitting the application check that it is complete, that all questions have been answered and that the site boundary and the new work are clearly edged in red on the plans. Every application must be accompanied by the appropriate certificate and fee. See "NOTES TO HELP APPLICANTS".

1769c

PLANNING APPLICATION

PART 2

This part of the form need only be completed if the application involves non-residential development. Please answer all questions in print or block letters. If the answer is not applicable, write N/A in the space. You may wish to amplify your answers in a covering letter.

24. STATE THE GROSS FLOOR SPACE (by external measurement) OF ALL BUILDINGS TO WHICH THIS APPLICATION REFERS. Please give all floor areas in SQUARE METRES.

		Existing floor space		Proposed additional floorspace created by	
	USE CLASS	Retained in *existing use*	Lost by change of *use or demolition*	New building	Change of use
A1	SHOPS				
A2	FINANCIAL AND PROFESSIONAL *SERVICES*				
A3	FOOD AND DRINK				
B1(a)	OFFICE (other than A2)				
B1 (b)	RESEARCH AND DEVELOPMENT				
B1 (c)	LIGHT INDUSTRIAL				
B2	GENERAL INDUSTRIAL				
B3-7	SPECIAL INDUSTRIAL				
B8	STORAGE OR DISTRIBUTION				
C1	HOTELS AND HOSTELS				
C2	RESIDENTIAL INSTITUTIONS				
D1	NON-RESIDENTIAL INSTITUTIONS				
D2	ASSEMBLY AND LEISURE				
OTHER	Please Specify				
OTHER	Please Specify				
	TOTAL				

25. IF C1 OR C2 USE IS PROPOSED, PLEASE STATE NUMBER OF BED SPACES

26. WHAT PROVISION IS BEING MADE FOR PARKING?

	Cars	Lorries
Existing		
Proposed		

27. DESCRIBE THE ACTIVITY OR PROCESSES TO BE CARRIED ON
Please provide details of any equipment, plant or machinery to be installed and any end products. You may wish to *amplify your answers in a covering letter.*

28. WHO WILL OCCUPY THE PREMISES?
a) Give the name and current operating address of the proposed occupier
b) Will these premises be vacated?

NATWEST BANK
CURRENT PROPERTY

29. IF KNOWN, HOW MANY PEOPLE ARE LIKELY TO BE EMPLOYED ON SITE AFTER COMPLETION OF THE DEVELOPMENT?

Existing Staff	*Transferred Staff*	*New Staff*	Total

30. DOES THE PROPOSAL INVOLVE THE USE OR STORAGE OF ANY OF THE HAZARDOUS SUBSTANCES LISTED IN THE NOTES?
If so, state this material, the quantity and method of storage.

NO

Before submitting the application check that it is complete, that all questions have been answered and that the site boundary and the new work *are clearly edged in red on the plans.* Every application must be accompanied by the appropriate certificate and fee. See "NOTES TO HELP APPLICANTS'.

(3)

ADDRESS 5 BROAD STREET PARISH WOKINGHAM

PLOT No. ORD. SHEET No. 750

BUILDER

Plan No.	Applicant	Description of Development	Date of Decision	Decisi
27845	N.W.B.	ILL. SIGN OVER NEW SERVICE TILL	16.5.81	C
40392	"	ILL. FASCIA SIGNS & PROJECTING SIGNS	6.3.93	C
~~40526~~				
*40917	"	ILL. PROJECTING SIGNS	4.10.93	SIGN N 2 ONLY C = R
40975	"	ILL. FASCIA & SIGNS	26.5.93	R
41625	"	REPL. DOOR	4.11.93	C
FP 93/1798	"	INT. ALTNS / FIRE PRECAUTION WORK	8.9.93	APP
41781	"	PART ILL. SIGN	14.12.93	R
41915	"	FIRE ESCAPE	25.1.94	C
96/63822/A	"	VARIOUS SIGNS	30.9.96	C
FP96/5471	"	INT. ALTS	2.7.96	APP

MINISTRY DECISION

SPECIAL ORDERS * SIGN NO. 1 - REFUSED

(1) ADDRESS 5 BROAD STREET PARISH WOK E

PLOT No. NATIONAL WESTMINSTER BANK ORD. SHEET No. 75B

BUILDER

Plan No.	Applicant	Description of Development	Date of Decision	Decision
TP 897		Hanging Sign	10/3/55	C/A
A/21/64	Westminster Bank	Fascia Sign	28/1/65	C/A
R/104/66		Change from use to provide extra office accom.	27/10/66	App
R/145/66		Instl. 1st floor of 5+7 enlarge & modify	22/12/66	App
06194	National Westminster Bank Ltd	Work to existing canopy waterproofing external face	12.5.77	n/a C/A
00195		(Rose Street Frontage)	12.5.77	n/a C/A

DATE OF COMPLETION

MINISTRY DECISION

SPECIAL ORDERS

DRAINAGE

091074

(2) ADDRESS 5 BROAD STREET PARISH WOKINGHAM E

PLOT No. NATIONAL WESTMINSTER BANK ORD. SHEET No. 75

BUILDER

Plan No.	Applicant	Description of Development	Date of Decision	Decision
04729	N.W.B	ALTERATIONS & EXTENSIONS	12.4.79	N/A C/
BR 16547	"	" "	18.4.81.	Ref N/
"	"	" "	6.5.81.	Relaxation as at
18768	"	ILL. BOX SIGN & NON-ILL. LETTERS	13.1.83	N/A C/
19173	"	"	6.5.83	N/A C/
20358	"	METAL SCREEN ON ROOF	17.11.83	N/A C/
22712	"	ILL. BOX SIGN	13.12.84	N/A Ref
BR25625	"	NEW NIGHT SAFE	16.11.85	App N/A
24689	"	1 INT. ILL. SIGN	5.12.85	C/A
24690	"	NEW NIGHT SAFE	5.12.85	C/A
27110	"	NEW SECURITY ILL & NON ILL EXTR	19.3.86	C/A
BRA1984		INT. ALTS/EXT. & REAR ELEV.	4.12.86	REF

DATE OF COMPLETION

MINISTRY DECISION 22712 - APPEAL DISMISSED - 2-9-85

SPECIAL ORDERS

DRAINAGE

091074

ZNWBW2

NWTV BUSINESS TV SITE SURVEY REPORT

Site Name: **WOKINGHAM** Z Code: ZNWBW 3011

Property Code: **6708**

ROOF PLAN

Indicate LOS and True North bearings from antenna site. Show all options found for antenna location. Indicate on diagram, approximate cable route and distances.You **MUST** show dimensions and state unit of measure.

Ensure that surrounding road names are detailed

From the recommended antenna location, which of the following orbital satellite positions would be visible Include (Line Of Sight)

Please specify: **10 13 16 degrees east** ALL

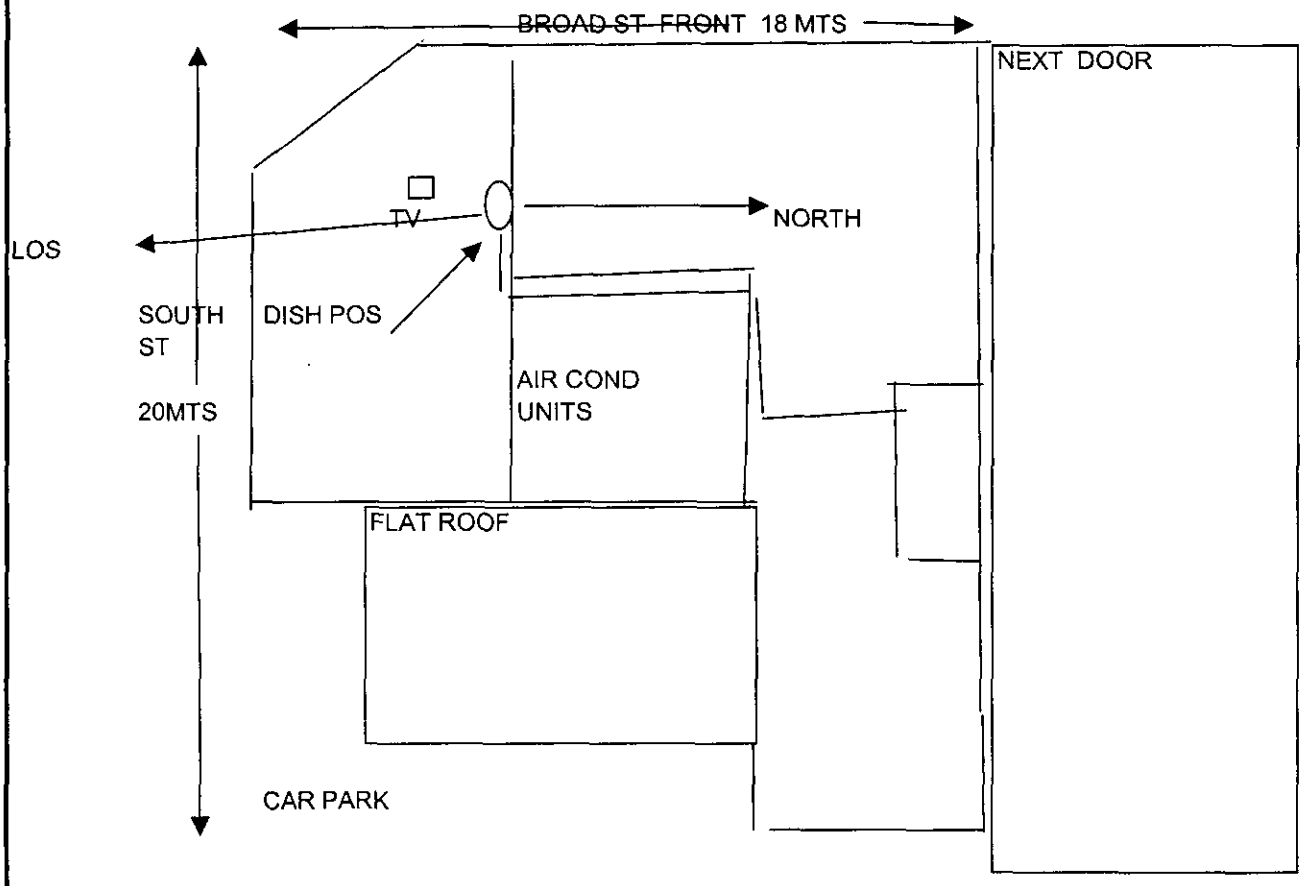

APPROVED

ZNWBW/4

07 DEC 2000 3011

NWTV BUSINESS TV SITE SURVEY REPORT

Site Name: **WOKINGHAM** Z Code: **ZNWBW**

Property Code: **6708**

3. Rear Perspective photograph

ZNWBW



ANTENNA VISIBLE?		NO	Please indicate position on picture

4. Antenna location photograph

DISH POS
ZNWBW



APPROVED

ANTENNA VISIBLE?	YES		Please indicate position on picture

ZNWBW/3

07 DEC 2000 3011

NWTV BUSINESS TV SITE SURVEY REPORT

Site Name: **WOKINGHAM** Z Code: **ZNWBW**

Property Code: **6708**

1. Side Perspective photograph

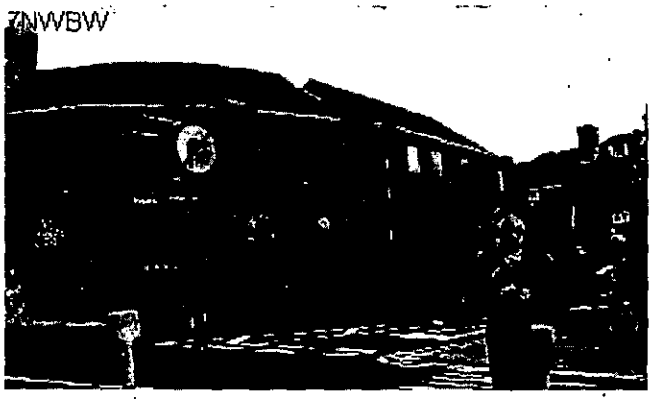

ANTENNA VISIBLE?		NO	Please indicate position on picture

2. Front Perspective photograph

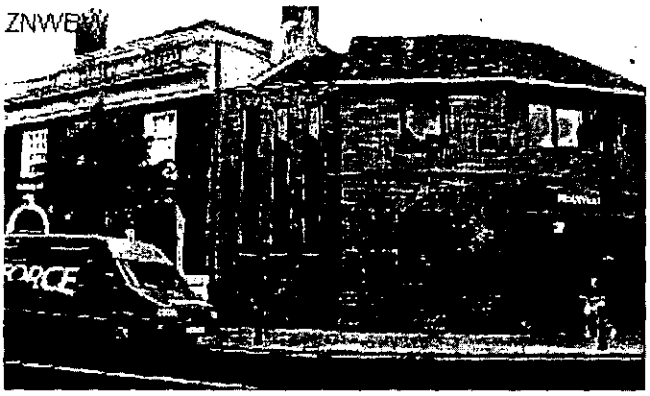

ANTENNA VISIBLE?		NO	Please indicate position on picture

Ordnance Survey

ZNWBW1

Siteplan

07 DEC 2000 1:1250 Scale

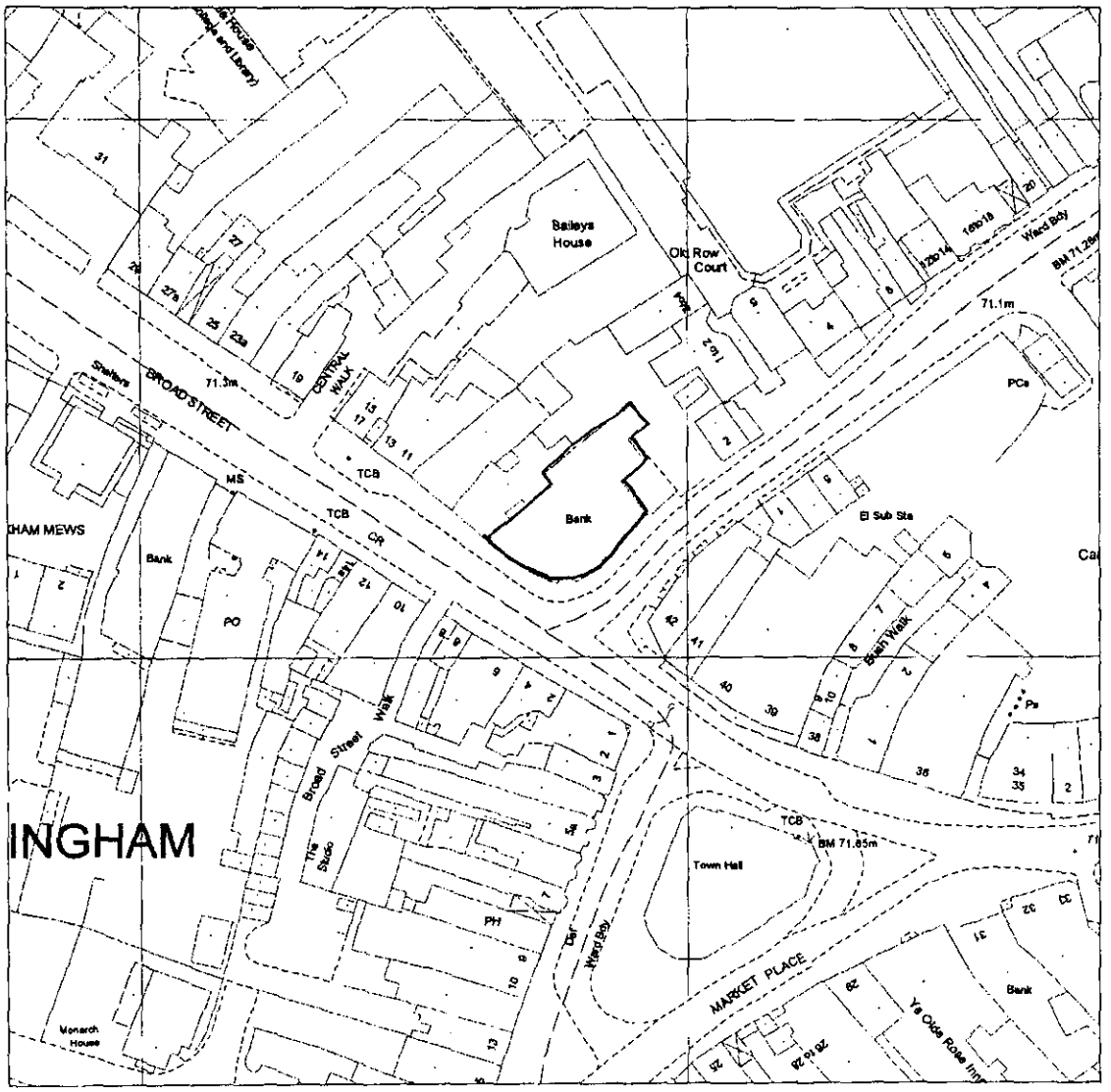

Produced 25 Aug 2000 from Ordnance Survey digital data and incorporating surveyed revision *available at this date.* © *Crown copyright 2000.*

Due to the resolution of this image, the depiction of a solid line within dashed lines does not necessarily constitute an obstruction at ground level.

Reproduction in whole or in part is prohibited without prior permission of Ordnance Survey.

20 0 20 40 60 80

Metres

NATWEST
5 BROAD STREET
WOKINGHAM
RG40 1AU 104318/76 ZNWBW

Centre coordinates : 481175mE 168620mN

National Grid sheet reference at centre of this Siteplan: SU8168NW.

Supplied by : National Map Centre Tel 020 7222 2466
Serial Number : 2871

CONDITION MONITORING RECORD SHEET

APPLICATION NO: **F/2000/3011**
CASE OFFICER: **Emy Circuit**
SECTION 106 AGREEMENT Yes ☐ No ☐

STAGE OF DEVELOPMENT	CONDITION NUMBER	DATE CONDITION DISCHARGED	DATE COMPLIANCE OBSERVED	DATE BREACH OBSERVED
PRIOR TO COMMENCEMENT				
COMMENCEMENT				
DURING CONSTRUCTION				
COMPLETION				