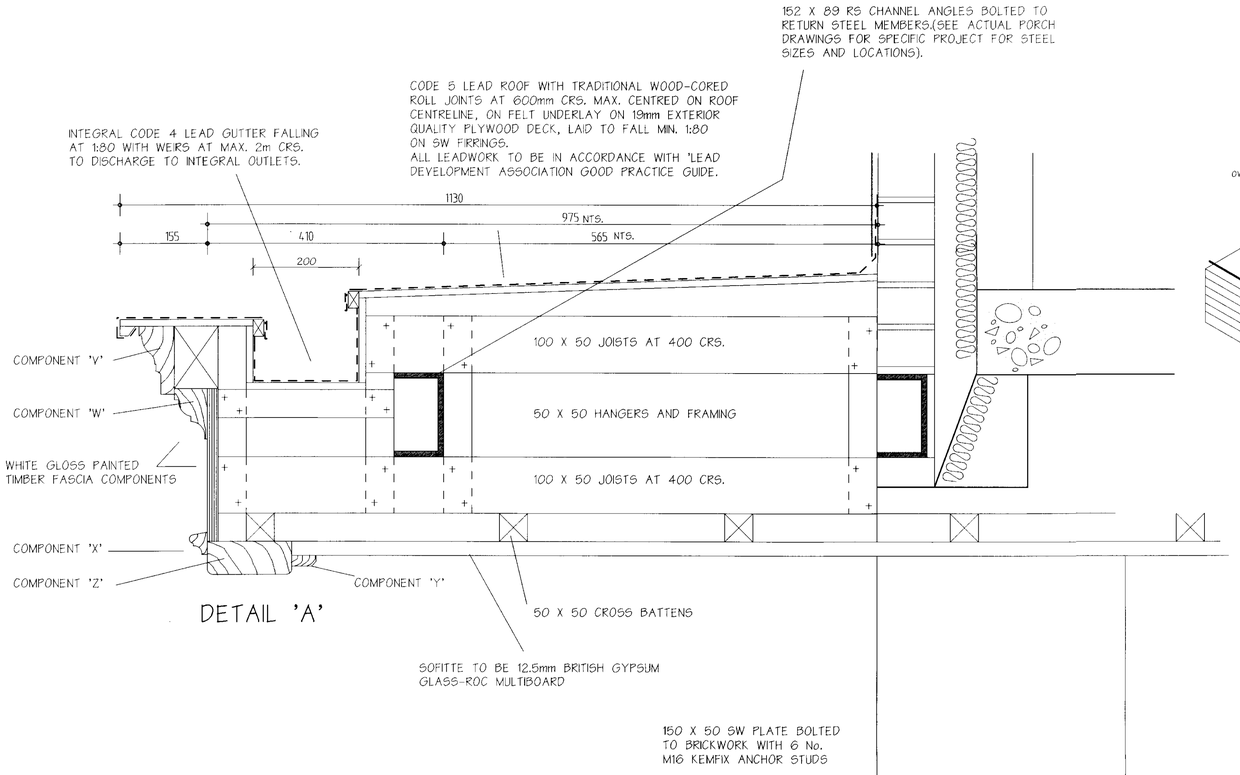

DETAIL 'A'

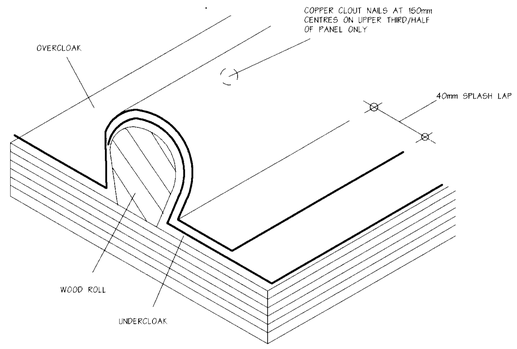

DETAIL 'B'

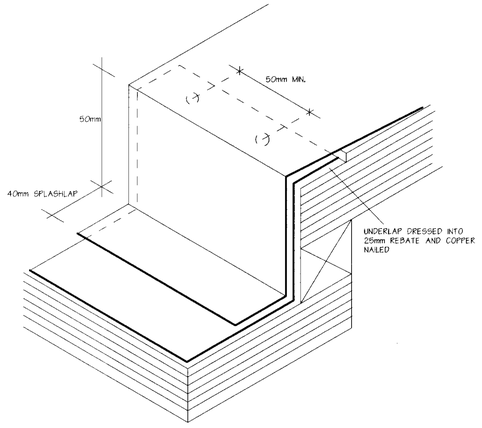

DETAIL 'C'

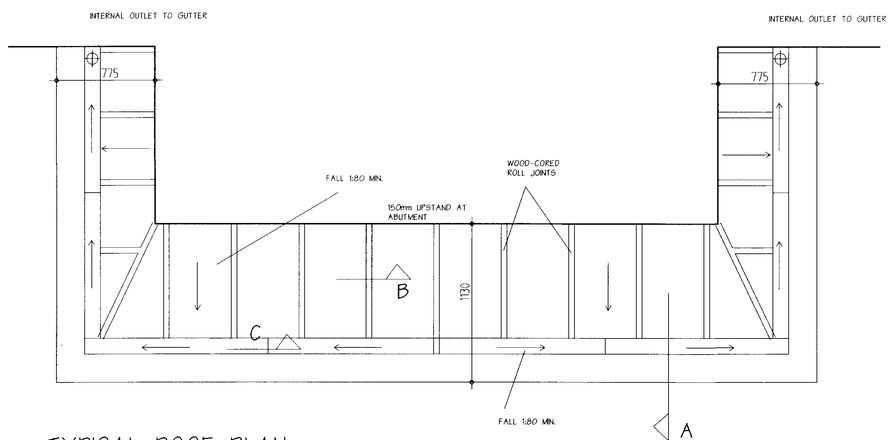

TYPICAL ROOF PLAN

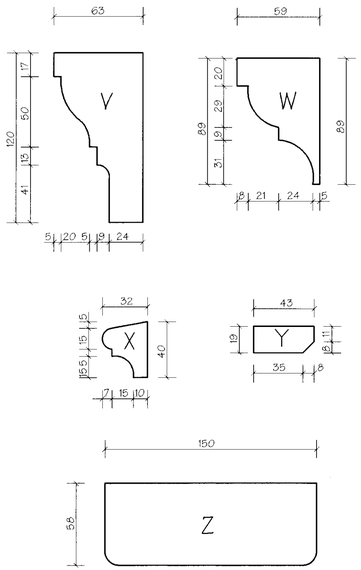

OCTAGON

OCTAGON DEVELOPMENTS LIMITED
'HAZELDEAN' STATION ROAD
LEATHERHEAD, SURREY, KT22 7AA
TEL:01372-361777 FAX:01372-361888

Title
ENTRANCE PORCH FRAMING AND ROOFING LEADWORK

Project
FORMER MOD SITE
WARGRAVE ROAD
REMENHAM
HENLEY

Scale 1:5 1:20 & 1/2FS
Drawn MJO
Drawing No. 365/29
Date JAN 00