APPLICATION NO:
CON/2002/6411

LOCATION:
The Angel on the Bridge PH Henley Bridge, Henley On Thames .

APPLICANT:
W H Brakespear & Sons C/O KRA

PROPOSAL:
Consultation from S Oxon DC on application to provide landing stage and extension to external seating area to public house.

EARLIEST DATE FOR DECISION: **09/05/2002**

APPLICATION WILL HAVE EXPIRED ON:
16/05/2002

CASE OFFICER: **Kerrin Lithgow**

357

RAILEX
Marbleboard

EASIFILE EP7

D 2

Tel. 0118 974 6441 (Direct Line)

Fax. 0118 9746484

Email. kerrin.lithgow@wokingham.gov.uk

Date. May 13, 2002

My ref. CON/2002/6411

Your ref. P02/S0295

Environmental Services Department
Planning Services
P.O. Box 157
Shute End, Wokingham
Berkshire RG40 1WR
Tel: (0118) 974 6000
Fax: (0118) 974 6484
Minicom No: (0118) 977 8909
DX: 33506 – Wokingham

Miss N. Goodyear
South Oxfordshire District Council
Council Offices
Crowmarsh Gifford
Wallingford
OX10 8NJ

Dear Miss Goodyear

APPLICATION NO: P02/S0295

With respect to the above application concerning the refurbishment of external timber decking and the provision of a hand rail, Wokingham District Council have no observations or objections.

Should you have any other questions in relation to this consultation please do not hesitate to contact me on my direct number provided above.

Yours sincerely

Kerrin Lithgow

Senior Planner

WORK SHEET FOR : Kerrin Lithgow

Application Number : CON/2002/6411

Applicant : W H Brakespear & Sons C/O KRA.

Location : The Angel on the Bridge PH, Henley Bridge, Henley On Thames, .

Proposal : Consultation from S Oxon DC on application to provide landing stage and extension to external seating area to public house.

Site Notice Displayed ? :

YES	NO	DATE

Date of Neighbour Notifications : N/A

Date of Site Visit : N/A

Date Registered : 18/04/2002

Earliest Date for Decision : 09/05/2002

Latest Consultation Date/Site Notice Expiry Date : 09/05/2002

This application will have expired on: 16/05/2002. You need to make a decision 1 day prior to this date for this application to count as determined in less than 8 weeks.

Consultation Responses :

None received.

Planning Issues :

Application Number: CON/2002/6411

Appraisal :

The application concerns the repair and alteration to a landing stage and external seating area at 'The Angel On The Bridge' public house, Henley Bridge. The site is located within South Oxfordshire District Council.

Asides from repair work to the landing stage and seating area, the application includes:

- the formation of new steps on to the landing (to match the existing); and
- the slight alteration of the balustrade, so that it sits 100mm higher.

The application concerns development within the curtilage of a listed building. It is not considered that the alterations will effect the amenity or character of the listed building.

In addition, it is not considered that the alterations will effect the amenity or character of the surrounding area, including views from the District of Wokingham across into Henley.

Recomendation : Approval: ☑ **Refusal:** ☐
(tick appropriate box)

Application Number CON/2002/6411
Conditions/Reasons for Refusal

No	Std Con	Std Reas	Non Std Conditions / Reasons for Refusal
			No objections to the proposed alterations and extensions.

Application Number : CON/2002/6411	Map No :
Case Officer : Kerrin Lithgow	Site Area :
Valid Date :	Received Date: 18/04/2002

Level : Delegated Application

Description : Consultation from S Oxon DC on application to provide landing stage and extension to external seating area to public house.

Location : The Angel on the Bridge PH, Henley Bridge, Henley On Thames, .

Parish : Ward :

Applicant : W H Brakespear & Sons C/O KRA.

Fee Required: £0 Fee Received: £0

Additional: ..... or Refund: .....

Enforcement Section to be notified ☐ (tick if required)

Additional information required for validation;

REASON	NOTES	DATE REQ	DATE RECD
LOCATION PLANS			
BLOCK PLANS			
FORMS UNSIGNED			
S.66 MISSING/INCORRECT/ UNSIGNED			
ELEVATION PLANS			
FLOOR PLANS			
NO SCALE OR SCALE IS IMPERIAL			
ENCROACHMENT LETTER REQUIRED			
OTHER			

Is the site in a Conservation Area: ☐ Yes ☐ No If "Yes" which one _____

Is the site a Listed Building: ☐ Yes ☐ No

Is a Statutory Advertisement required: ☐ Yes ☐ No

INTERNAL CONSULTATIONS

Building Control

Heritage (Harold Sanders)

Landscape

Trees

Environmental Health

Housing

Leisure & Cultural Services

Public Rights of Way Officer

Property

Policy & Plans

Joint Strategic Planning Unit

Archaeological Officer (BABTIE)

Education

Social Services

Highways

EXTERNAL CONSULTATIONS

Adjacent DPA : _____

Adjacent Parish : Remenham

SEB Cllrs Ethendge + Browne

British Gas

Oil pipeline

Transco

Environment Agency

Railtrack

Police Arch Officer

HERITAGE BODIES

Victorian Society
The Georgian Group
Ancient Monuments Society
Council for British Arch
RCHME
NRPB (Telecommunications)
Sport England
Society for Proct' of Ancient Bldgs
English Heritage

OTHERS

.....

.....

.....

.....

.....

.....

NEIGHBOURS

.....

.....

.....

CON/2002/6611

South Oxfordshire District Council

Adrian Duffield, Head of Planning
Council Offices, Crowmarsh Gifford
Wallingford, OX10 8NJ

Tel : (01491) 823740, Fax : (01491) 823746

Contact Officer : Miss N. Goodyear
e-mail : planning.south@southoxon.gov.uk

PLANNING SERVICES	HPT
POL	TLS
DC	ENF
APP	
CS	

18 APR 2002

Wokingham District Council
Planning Services PO Box 157
Council Offices, Shute End
WOKINGHAM
Berks
RG40 1WR

Our Reference : P02/S0295

17 April 2002

Dear Sir/Madam

REFURBISHMENT OF EXTERNAL TIMBER DECKING AND PROVISION OF HAND RAIL.
At : THE ANGEL-ON-THE-BRIDGE PH, THAMESIDE, HENLEY-ON-THAMES
Application Reference : P02/S0295 Grid Ref : 476327/182628

This application has been submitted to the District Council as Local Planning Authority. I enclose a copy of the application form(s) with appropriate plans.

I am consulting you in accordance with the requirements of Article 10(4) of the Town and Country (General Development Procedure) Order 1995 because the development may be considered to affect land within the administrative area of your Authority.

Any representations on the proposal should be made to the Council, in writing, to the address given above, within **14 days** of the date of this letter. These comments will normally be made available to the public.

Should you require any further information or advice please let me know.

Yours faithfully

Miss N. Goodyear
Planning Officer (Southern Area)
for the Planning Manager (Southern Area)

POSITIVE ABOUT DISABLED PEOPLE

INVESTOR IN PEOPLE

P02152295

South Oxfordshire District Council

PLANNING APPLICATION - PART 2

This part of the form need only be completed of the application involves non-residential development. Please answer all questions in block letters. If the answer is not applicable, write N/A in the space. You may wish to amplify your answers in a covering letter.

19. State the gross floor space (by external measurement) of all buildings to which this application refers. Please give all floor areas in SQUARE METRES (m^2).

	User Class	Existing floorspace	Proposed change + or -	Total
A1	Shops			
A2	Financial & professional services			
A3	Food & drink	630	0	630
B1(a)	Office (other than A2)			
B1(b)	Research & development			
B1(c)	Light industrial			
B2	General industrial			
B8	Storage or distribution			
C1	Hotels			
C2	Residential institutions			
C3	Dwellings			
D1	Non-residential institutions			
D2	Assembly & leisure			
	Other please specify			

20. If a C1 or C2 use is proposed, please state number of bed spaces	C1 N/A C2
21. What provision has been made for parking ?	No. of cars / No. of lorries
Existing	
Proposed	N/A
What is the estimated number of vehicles going to the site in a normal working day ?	
22. Describe the activity or processes to be carried on *(Provide details of any equipment, plant or machinery to be installed and any end products. You may wish to amplify your answers in a covering letter)*	EXTERNAL SEATING AREA FOR PUBLIC HOUSE
23. Who will occupy the premises ? *(a) Give the name and current operating address of the proposed occupier. (b) Will these premises be vacated ?*	N/A
25. How many people are likely to be employed on site after completion of the development ?	Existing staff: N/A / Transferred / New staff / Total
26. Does the proposal involve the use or storage of any hazardous substances as listed overleaf ? *(If so state which material, the quantity and the method of storage)*	NO

RECEIVED
-4 APR 2002
PLANNING SOUTH

18 APR 2002

Before submitting the application check that it is complete, that all questions have been answered and that the site boundary and the new work are clearly edged in red on the plans. Every application must be accompanied by the appropriate certificate and fee. See "GUIDE TO HELP APPLICANTS."

HAZARDOUS MATERIALS

Substance	Controlled (In tonnes)
TOXIC SUBSTANCES	
• Acetone Cyanohydrin (2-Cyanopropan-2-ol)	200
• Acrolein (2-Propenal)	200
• Acrylonitrile	20
• Allyl alcohol (2-Propen-1-ol)	200
• Allylamine	200
• Ammonia (anhydrous or as solution containing more than 50% by weight of ammonia	100
• Arsenic trioxide, Arsenious (III) acid and salts	1
• Arsine (Arsenic hydride)	1
• Bromine	40
• Carbon disulphide	20
• Chlorine	10
• Ethylene dibromide (1,2-Dibromoethane)	50
• Ethyleneimine	50
• Formaldehyde (>90%)	50
• Hydrogen chloride (liquefied gas)	250
• Hydrogen cyanide	20
• Hydrogen fluoride	10
• Hydrogen selenide	1
• Hydrogen sulphide	50
• Methyl bromide (Bromoethane)	200
• Methyl isocyanate	150kg
• Nickel tetracarbonyl	1
• Nitrogen oxides	50
• Oxygen difluoride	1
• Pentaborane	1
• Phosgene	750kg
• Phosphine (Hydrogen phosphide)	1
• Propyleneimine	50
• Selenium hexafluoride	1
• Stibine (Antimony hydride)	1
• Sulphur dioxide	20
• Sulphur trioxide (including the sulphur trioxide content in oleum)	15
• Tellurium hexafluoride	1
• 2,3,7,8-Tetrachlorodibenzo-p-dioxin (TCDD)	1kg
• Tetraethyl lead	50
• Tetramethyl lead	50
HIGHLY REACTIVE & EXPLOSIVE SUBSTANCES	
• Acetylene (Ethyne) when a gas subject to a pressure not exceeding 620 millibars above that of the atmosphere and not otherwise deemed to be an explosive by virtue of Order in Council No 30(a) as amended by the Compressed Acetylene Order 1947(b), or when contained in a homogeneous porous substance in cylinders in accordance with Order of Secretary of State No 9(c), made under the Explosives Act 1875(d)	50
• Ammonium nitrate and mixtures containing ammonium nitrate where the nitrogen content derived from the ammonium nitrate exceeds 28% of the mixture by weight other than: (i) mixtures to which the Explosives Act 1875 applies; (ii) ammonium nitrate based products manufactured chemically for use as fertiliser which comply with Council Directive 80/876/EEC(e); or (iii) compound fertilisers	500
• Aqueous solutions containing more than 90 parts by weight of ammonium nitrate per 100 parts by weight of solution	500
• Ammonium nitrate based products manufactured chemically for use as fertilisers which comply with Council Directive 80/876/EEC and compound fertilisers where the nitrogen content derived from the ammonium nitrate exceeds 28% of the mixture by weight	1000
• 2,2-Bis(tert-butylperoxy)butane (>70%)	5
• 1,1-Bis(tert-butylperoxy)cyclohexane (>80%)	5
• tert-Butyl peroxyacetate (>70%)	5
• tert-Butyl peroxyisobutyrate (>80%)	5
• tert-Butyl peroxyisopropylcarbonate (>80%)	5
• tert-Butyl peroxymaleate (>80%)	5
• tert-Butyl peroxypivalate (>77%)	5
• Cellulose nitrate other than- (i) cellulose nitrate to which the Explosives Act 1875 applies; or (II) solutions of cellulose nitrate where the nitrogen content of the cellulose nitrate does not exceed 12.3% by weight and the solutions contains not more than 55 parts of the cellulose nitrate per 100 parts by weight of solution	50
• Dibenzyl peroxydicarbonate (>90%)	5
• Diethyl peroxydicarbonate (>30%)	5
• 2,2-Dihydroperoxypropane (>30%)	5
• Di-isobutyryl peroxide (>50%)	5
• Di-n-propyl peroxydicarbonate (>80%)	5
• Di-sec-butyl peroxydicarbonate (>80%)	5
• Ethylene oxide	5
• Ethyl nitrate	5
• 3,3,6,6,9,9-Hexamethyl-1,2,4,5-tetroxacyclononane (>75%)	5
• Hydrogen	2
• Liquid Oxygen	500
• Methyl ethyl ketone peroxide (>60%)	5
• Methyl isobutyl ketone peroxide (>60%)	5
• Peracetic acid (>60%)	5
• Propylene oxide	5
• Sodium chlorate	25
• Sulphur dichloride	1
FLAMMABLE SUBSTANCES	
• Liquefied petroleum gas, such as commercial propane and commercial butane, and any mixtures thereof, when held at a pressure greater than 1.4 bar absolute	25
• Liquefied petroleum gas, such as commercial propane and commercial butane, and any mixture thereof, when held under refrigeration at a pressure of 1.4 bar absolute or less.	50
• **Gas or any mixture of gases which is flammable in air, when held as a gas.	15
• **A substance or any mixture of substances, which is flammable in air, when held above its boiling point (measured at 1 bar absolute) as a liquid or as a mixture of liquid and gas at a pressure of more than 1.4 bar absolute.	25
• **A liquefied gas or any mixture of liquefied gases, which is flammable in air and has a boiling point of less than 0°C (measured at 1 bar absolute), when held under refrigeration or cooling at a pressure of 1.4 bar absolute or less.	50
• A liquid or any mixture of liquids not included in entries ** which has a flash point of less than 21°C.	10000

South Oxfordshire District Council

FOR OFFICE USE
Application Ref. P02/S2957
Date of Deposit. 5.4.02

57552

PLANNING APPLICATION - PART 1

Application for permission to carry out development under the Town and Country Planning Acts

Please answer ALL QUESTIONS in BLOCK LETTERS. If a question is not applicable, answer N/A in space. Submit FOUR copies of this form and plans

1. Name and address of applicant	WH BRAKSPEAR & SONS PLC THE BREWERY NEW STREET HENLEY postcode RG9 2BU tel 01491 570200
2. Name and address of agent *(If the applicant has an agent, all correspondence will be sent to the agent)*	KRA CONSULTING ENGINEERS LTD SUITE 8 MARKET HOUSE 19/21 MARKET PLACE, WOKINGHAM RG40 1AP contact name L CRANSTON tel 01189799244
3. Site address	THE ANGEL THAMESIDE HENLEY grid reference
4. Area of application site	m² 400 hectares
5. Description of proposed development *(Give brief details and state for what purpose the site and any buildings will be used)*	REFURBISHMENT OF EXTERNAL TIMBER DECKING AND PROVISION OF HANDRAIL

6. Plans and drawings accompanying application

Detailed drawings *(Floor Plans, Elevations etc)* ☑

Location plan ☑

Block plan ☐

7. Does the application involve any of the following ?

(Tick box or boxes)

Change of use ☐

Demolition ☐

Engineering or other operation ☐

New building ☐

Alteration or extension ☐

RECEIVED
-4 APR 2002
PLANNING SOUTH

8. What kind of application is this ? *(Tick one box only)*

Full permission ☑

Outline permission *(See question 9)* ☐

Approval of details *(Reserved matters)* ☐

Temporary permission or renewal of previous temporary permission ☐

Relaxation of conditions *(Please amplify your application in a covering letter)* ☐

State relevant outline permission no.

State period required or previous application no.

State relevant application no.

9. Outline applications.

Which of the following do you wish to be considered as part of the application ?

External appearance ☐

Means of access ☐

Siting ☐

Design ☐

Landscaping ☐

18 APR 2002

DATA PROTECTION ACT 1984

'Information contained in this form is likely to be personal data within the terms of the Data Protection Act 1984, and as such will be held on the Council computer (such as SOLAPS applications processing systems) and may be used by the Council only for the purposes registered under the terms of the Data Protection Act'

10. What is the existing use of the land ? e.g. residential. If the site is vacant, say so and also state its previous use.	PUBLIC HOUSE
11. Is there any public right of way across or bordering the site ? *(If so, show it clearly on the plans)*	YES ☐ NO ☑
12. Where new building is proposed. (a) State material and colour of walls (b) State material and type of roof covering	N/A
13. How will surface water be disposed of ?	N/A
14. How will foul sewage be disposed of ?	N/A
15. Is it proposed to construct a new access or alter an existing access ? If so please give details	N/A
16. If the proposal involves residential development, please give the information requested.	No. of new dwellings proposed / No. of existing dwellings to be retained
House	N/A /
Bungalow	/
Flat/Maisonette	/
Other	/
17. Does the proposal involve any non-residential building or use ?	*(If YES complete part 2 of form)* YES ☑ NO ☐
18. Does the proposal involve the extraction of minerals or disposal of waste materials (Tipping)	YES ☐ NO ☑

I herby apply for planning permission for the proposal described above and in the attached plans and drawings.

Please tick all boxes

I attach 4 copies of the completed Application Form Part 1, AND ☑

I attach 4 copies of the completed Application Form Part 2 (where relevant), AND ☑

I attach 4 copies of each of the plans specified at item 6 overleaf, AND ☑

I attach a completed Ownership Certificate, AND ☑

I enclose a completed fee form and a fee of £ _____ ☑

Signed R Glaister on behalf of KRA CONSULTING ENGINEERS date 3.4.02

Before submitting the application check that it is complete, that all questions have been answered and that the site boundary is clearly edged RED on the plans. Any adjoining land owned or controlled by the applicant should be edged BLUE. AN INCORRECT APPLICATION WILL BE RETURNED. SEE GUIDE TO HELP APPLICANTS.

P0215-295

Town and Country Planning Act 1990 - General Development Procedure Order 1995

Certificate under Article 7 CERTIFICATE OF OWNERSHIP

CERTIFICATE A

should be used where the applicant owns all the land to which the application relates

CERTIFICATE B

should be used where the applicant does not own all the land to which the application relates but knows the name and address where the appropriate notice can be served.

CERTIFICATES C & D

should be used where the applicant does not know the names or contact addresses of all or any of the owners of any part of the application site. Provisions must be made to advertise the proposal in a newspaper circulating in the area where the land is situated.

CERTIFICATES C & D

are rarely required. They are not included in this application form package. The Council will supply these forms on request.

PLEASE COMPLETE THE APPROPRIATE CERTIFICATE

CERTIFICATE A

I certify that :

1. On the day 21 days before the date of the accompanying application nobody except the applicant was the owner * of any part of the land to which the application relates.

   Please delete EITHER 2(i) OR 2(ii) whichever is not appropriate

2. ~~(i) None of the land to which the application relates is, or is part of, an agricultural holding **.~~

   ~~(ii) I have given the required notice to every person other than myself who, on the day 21 days before the date of the application, was a tenant of an agricultural holding on all or part of the land to which the application relates, as follows:~~

   ~~Tenant's name~~ _____

   ~~Address at which notice served~~ _____

   Date notice served _____

RECEIVED
4 APR 2002
PLANNING SOUTH

Signed L Cranston K.R.A. CONSULTING ENGINEERS

On behalf of WH BRAKSPEAR & SONS PLC

Date 3 APRIL 2002

PLANNING SERVICES | HPT
FOL | TLS
18 APR 2002
COPIES

Note

* *'Owner' means a person having a freehold interest or a lease-hold interest in the unexpired term of which is not less than 7 years.*

** *If the applicant is the sole agricultural tenant delete the first alternative (2)(i) and insert 'not applicable' in the space provided for tenant details*

CERTIFICATE B

I certify that :

1. I have given the required notice to everyone else who, on the day 21 days before the date of the accompanying application, was the owner * of any part of the land to which the application relates, as listed below.

Owner's name _____

Address at which notice served _____

Date notice served _____

Please delete EITHER 2(i) OR 2(ii) whichever is not appropriate

2. (i) None of the land to which the application relates is, or is part of, an agricultural holding **.

(ii) I have given the required notice to every person other than myself who, on the day 21 days before the date of the application, was a tenant of an agricultural holding on all or part of the land to which the application relates, as follows:

Tenant's name _____

Address at which notice served _____

Date notice served _____

Signed _____

On behalf of _____

Date _____

Notes

* *'Owner' means a person having a freehold interest or a lease hold interest in the unexpired term of which is not less than 7 years.*

** *If the applicant is the sole agricultural tenant delete the first alternative (2)(i) and insert 'not applicable' in the space provided for tenant details*

NOTICE

Town and Country Planning General Development Procedure Order 1995

Notice under Article 6 of Application for Planning Permission

Proposed development at (a) _____

I give notice that (b) _____

is applying to South Oxfordshire District Council

for planning permission (c) _____

Any owner of the land who wishes to make representations about this application should write to the

S.O.D.C. Planning Services, Council Offices, Benson Lane, Crowmarsh, WALLINGFORD, Oxon. OX10 8NJ

by (d) _____

Signed _____

On behalf of _____

Date _____

Notes

(a) Address or location of the proposed development
(b) Applicant's name
(c) Description of proposed development
(d) Date giving a period of 21 days beginning from the date notice is served

P/02/1529/FP

P/02/0277/LB

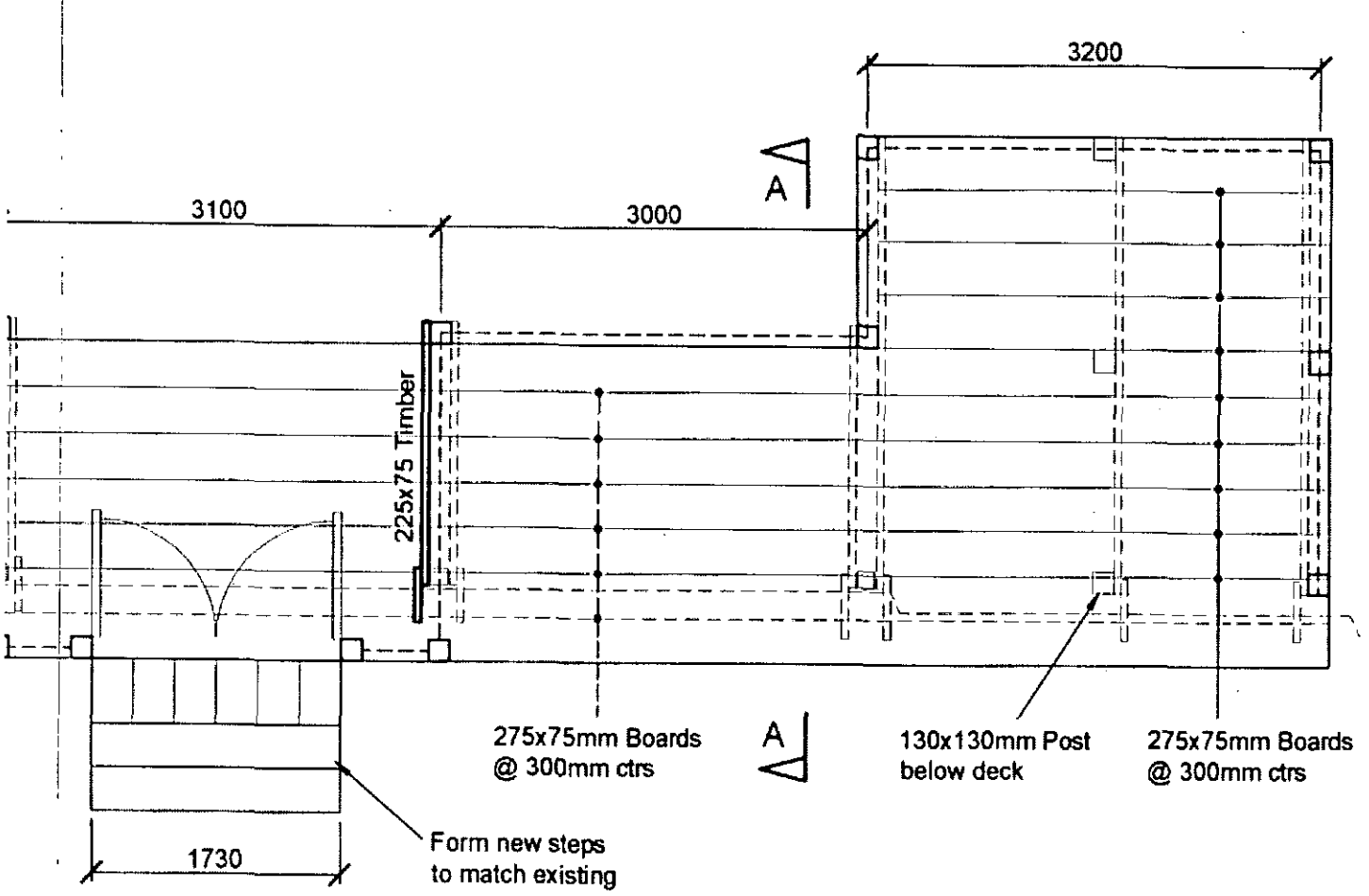

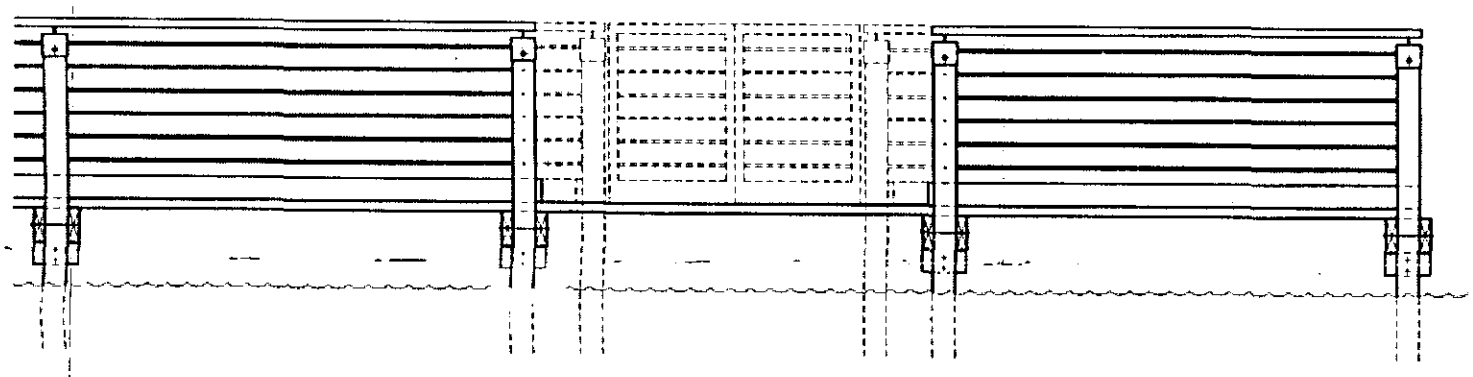

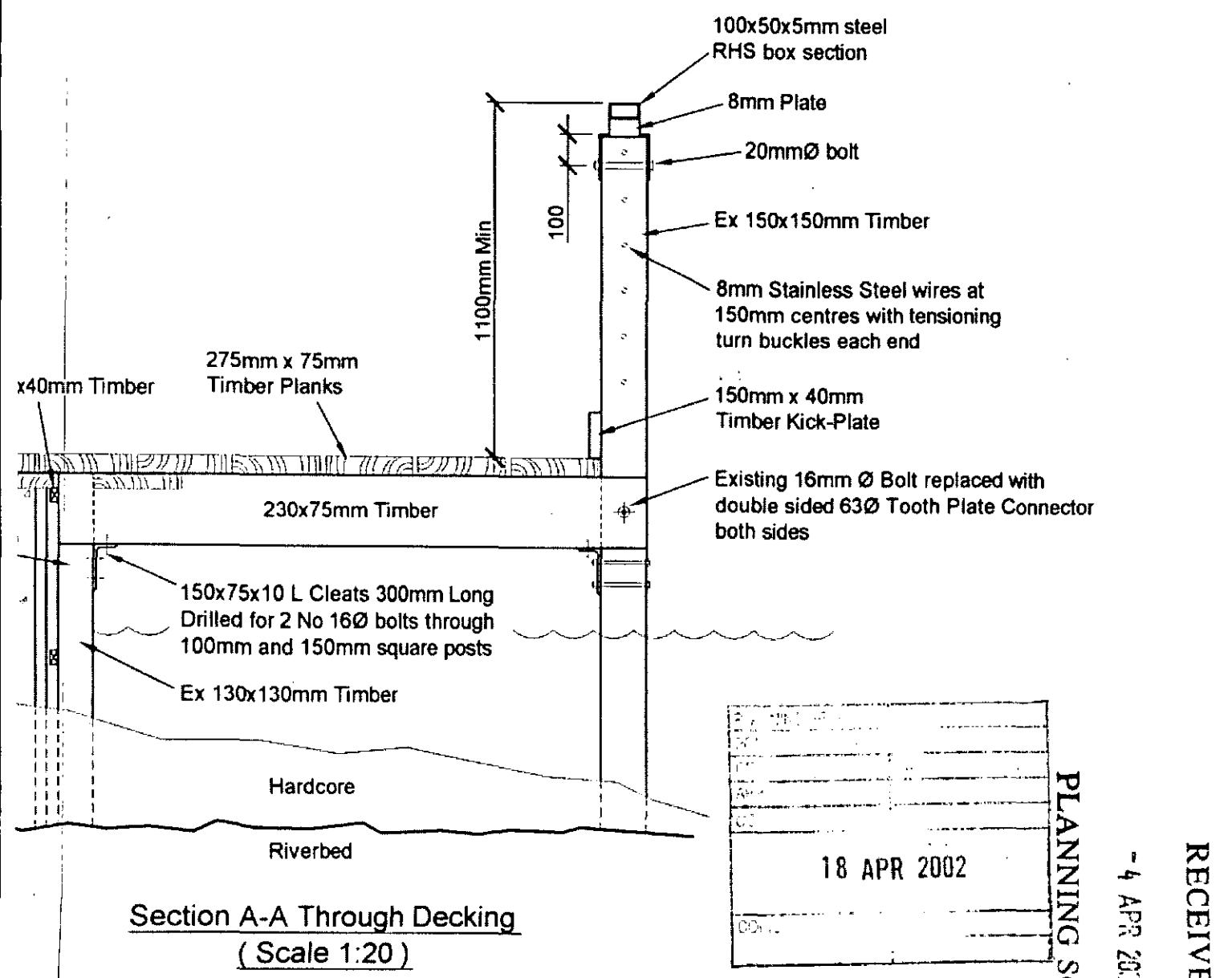

Section A-A Through Decking
(Scale 1:20)

18 APR 2002

PLANNING SOUTH

RECEIVED

- 4 APR 2002

Notes:

1. This drawing should be read in conjunction with all tender documentation.

2. All timber to be grade C30 minimum and treated with an approved preservative.

3. All steelwork to be supplied heavily galvanised. Hot rolled structural steelwork to be grade S275 to BS EN 10025.

Rev	Description	By	Date
A	Plan Amended / Elevation Added Kick Plate, Steps & Gates Added Steel Wire Centres Amended	AKW	01.03.02

Dimensions to be verified on site
DO NOT SCALE FROM THIS DRAWING.
Any areas indicated on this drawing are for guidance only.
No responsibility is taken for their accuracy.

This drawing is the property of **KRA** Consulting Engineers Limited
Copyright is reserved by them and the drawing is issued on the condition that it is not copied, reproduced, retained or disclosed to any unauthorised person, either wholly or in part without the consent in writing of **KRA** Consulting Engineers Limited, Suite 8, Market House, 19-21 Market Place, Wokingham, Berkshire RG40 1AP
Tel 0118 979 9244 Fax 0118 979 9245

Project

External Timber Deck To The Angel PH Henley-On-Thames

Consultant

KRA Consulting Engineers Ltd
Suite 8, Market House, Market Place
Wokingham, Berkshire, RG40 1AP
e-mail:Design@KRAEngineers.co.uk
web: www.KRAEngineers.co.uk
(T) 0118 979 9244 (F) 0118 979 9245

Drawing Title

Remedial Works Details

Drawing No	Revision
3031/GA02	A

A2 Scale: 1:20 & 1:50	Date: Jan '02
Computer File: 3031/GA02	Project No: 3031
Drawn By: AKW	Checked by:
Coordinated By: MD	Approved By:

Client

WH Brakspear & Sons Plc

A2

Elevation

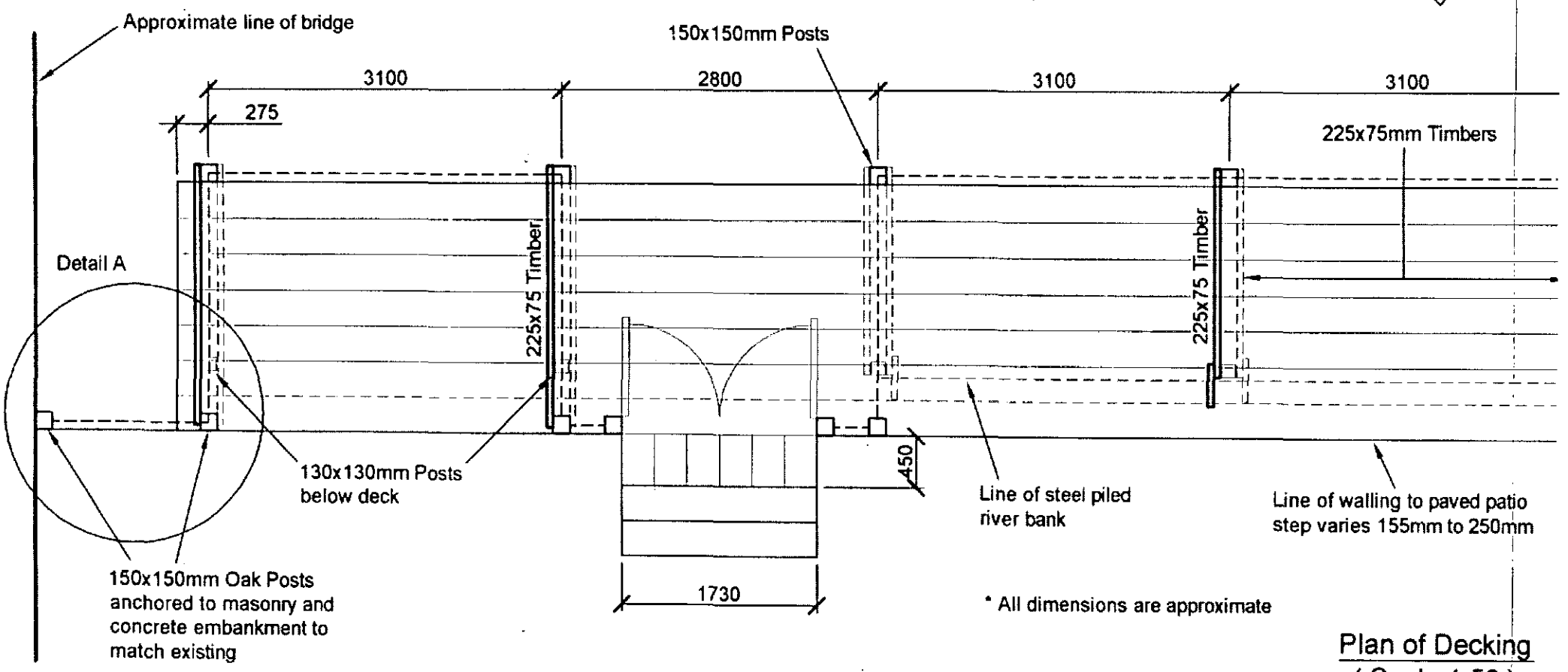

* All dimensions are approximate

Plan of Decking
(Scale 1:50)

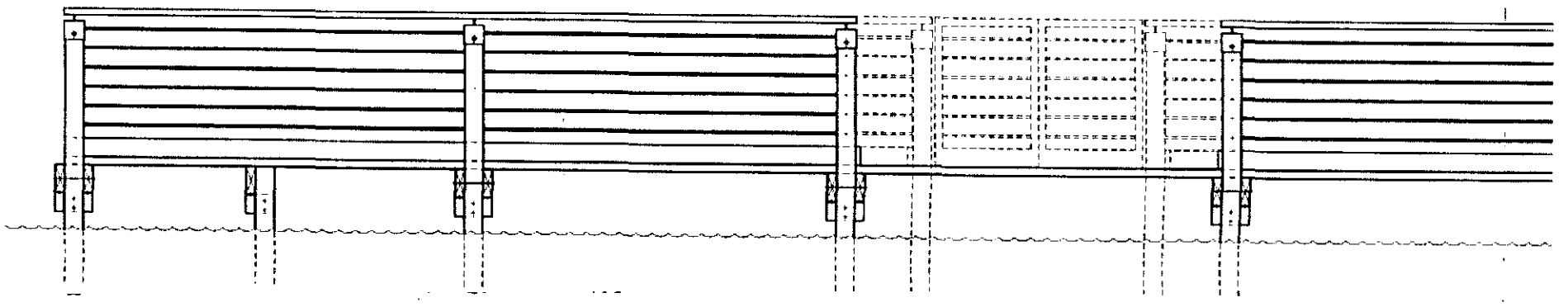

Elevation of Balustradi
(Scale 1:50)

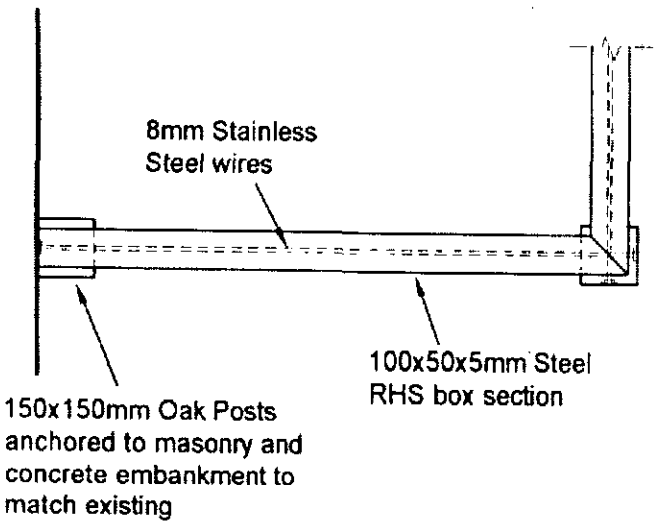

Detail A
(Scale 1:20)

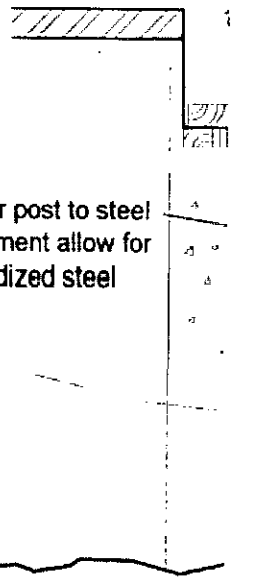

Check fixings of timber post to steel and concrete embankment allow for 2 No 20Ø drilled sheridized steel anchors

NOTE

a) Some timber posts below water line have deteriorated with loss of section.
(See report prepared by Constructive Evaluation)
Allow for steel plating worst case posts with 125x8mm plates. (Heavilly Galvanised)
Assume 2 No plates per post 1200mm long to 12 No posts fixed using
4 No 12Ø sheridized bolts per post. (Some fixings will be below waterline).

b) All boarding to be removed for strengthening works.
Each board to be checked for reuse.
Allow for replacement of 6 No boards 6.2m approximate length in minimum C30 timber.

c) All boards to be refixed to new and existing supports with
2 No coach bolts per board to all timber support beams.

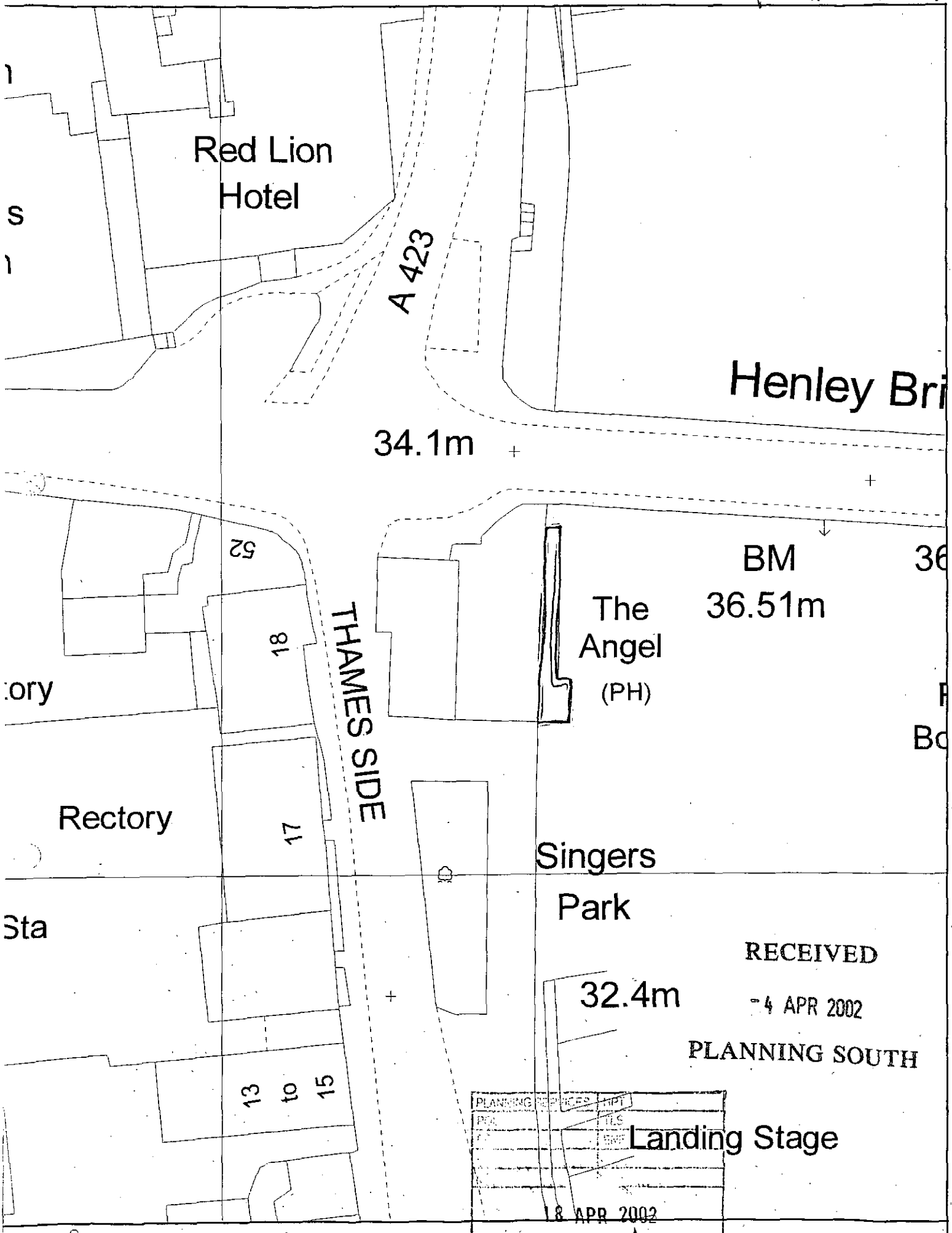

South Oxfordshire District Council

Enquiry System

Printed on 19/03/02
at scale of 1:500

This copy has been produced specifically for the map return scheme purposes only. No further copies may be made. This map is reproduced from Ordnance Survey material with the permission of Ordnance Survey on behalf of the Controller of Her Majesty's Stationery Office ? Crown copyright. Unauthorised reproduction infringes Crown copyright and may lead to prosecution or civil proceedings.
South Oxfordshire District Council / LA 079464 / 2002

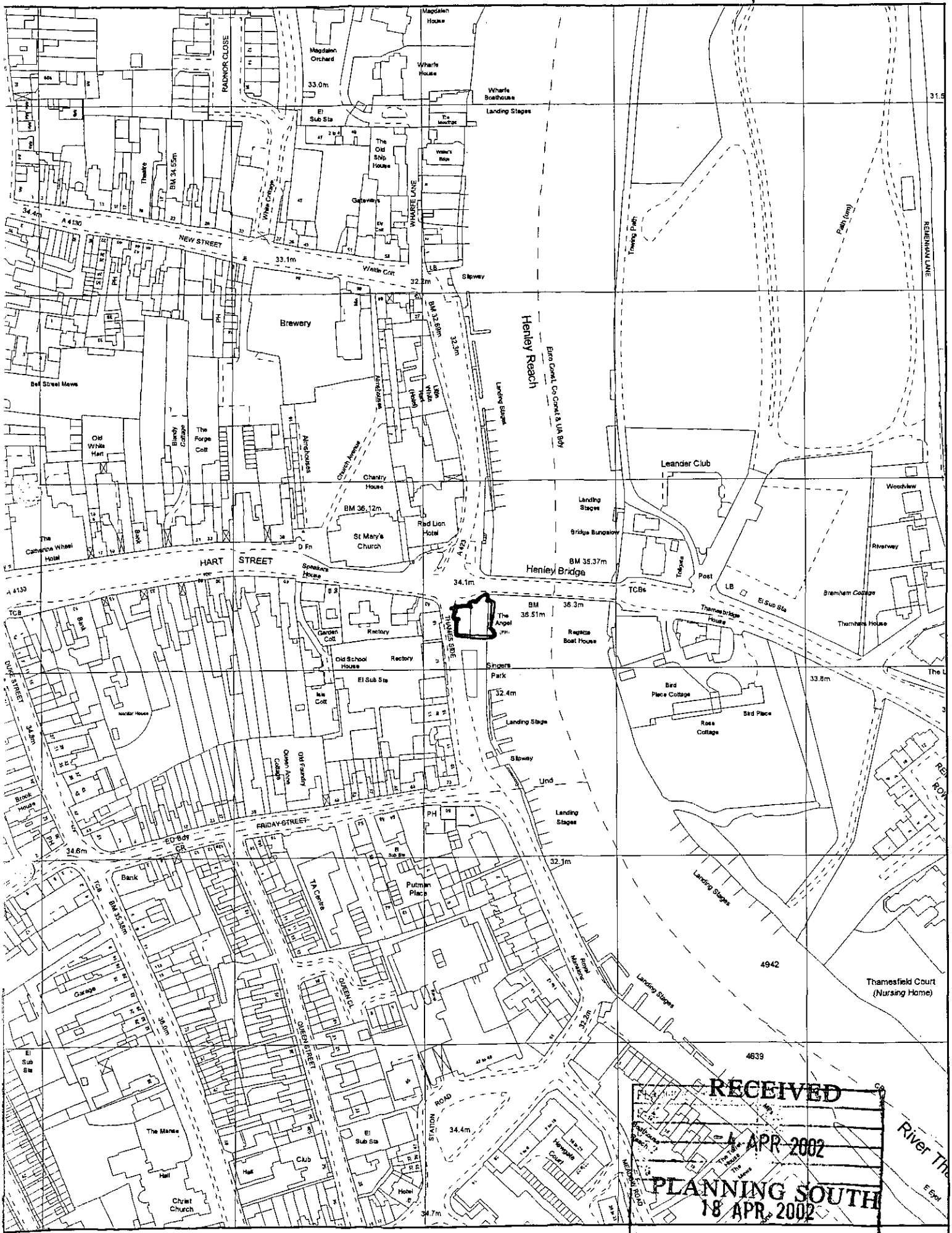

South Oxfordshire District Council

Enquiry System

Printed on 19/03/02
at scale of 1:2,500

N

This copy has been produced specifically for the map return scheme purposes only. No further copies may be made. This map is reproduced from Ordnance Survey material with the permission of Ordnance Survey on behalf of the Controller of Her Majesty's Stationery Office © Crown copyright. Unauthorised reproduction infringes Crown copyright and may lead to prosecution or civil proceedings.
South Oxfordshire District Council / LA 079464 / 2002

P0215-271 19



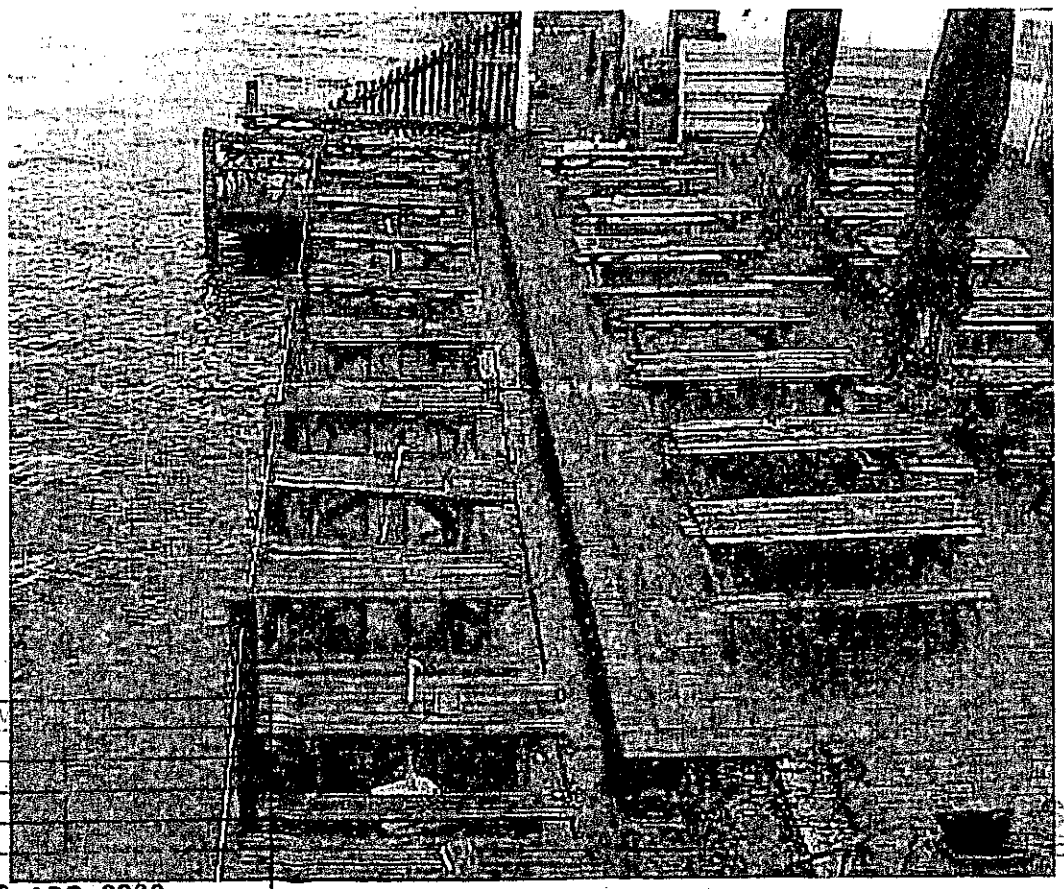

PLANNING SERV
POL
DC
APP
CS
18 APR 2002
CK:
FILE:

S.O.D.C.
EALS/ENF
15 MAR 2002
RECEIVED

P0215.277 /6

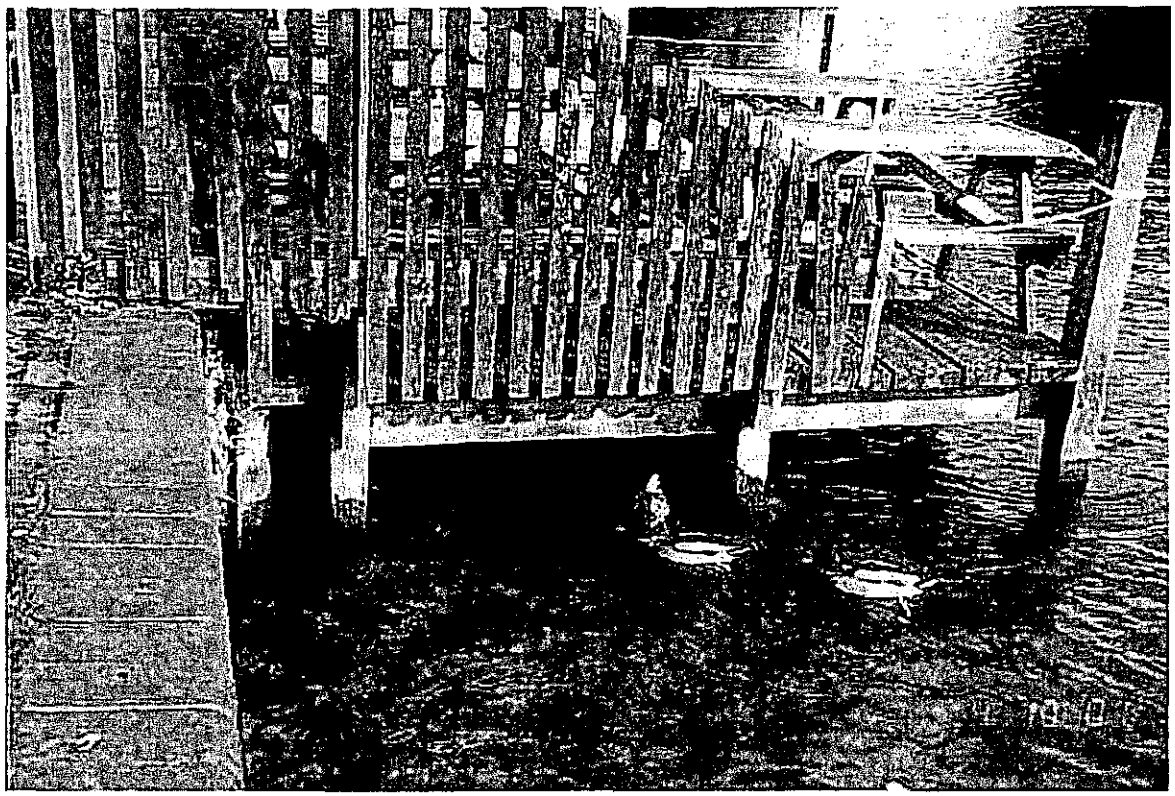



PLANNING SERV
POL
DC
ENF
APP
CS
18 APR 2002
TO
ACK:
FILE:

S.O.D.C.
APPEALS/ENF
15 MAR 2002
RECEIVED

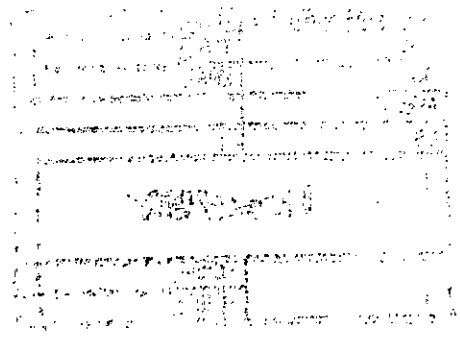

P02153211 / 13

S.O.D.C.
APPEALS/ENF
15 MAR 2002
RECEIVED

KRA Consulting Engineers Ltd
Suite 8, Market House, Market Place
Wokingham, Berkshire, RG40 1AP
e-mail: Design@KRAEngineers.co.uk
web: www.KRAEngineers.co.uk
(T) 0118 979 9244 (F) 0118 979 9245

DRAWING ISSUE SHEET

External Timber Deck To The Angel PH, Henley-On Thames

Job No: 3031

Sheet No: 01

W.H. Brakspear & Sons plc	Day	16	16	01	01	14
	Month	01	01	03	03	03
	Year	02	02	02	02	02
Drawing Title	Drg No	Amendments				
Survey Drawing	GA01	x			x	x
Remedial Works Details	GA02	x		A	A	A
Constructive Evaluation Ltd						
Test Sample 1 & 2 Survey	01.2189		x			
Status		P	I	A	A	PL

Status Key: A - Approval; B - As Built; C - Construction; P - Preliminary; I - Information; T - Tender; PL - Planning

Media Key: D - Disk; E - Email; P - Paper

Media	P	P	P	P	P
Distribution	Number of Copies				
Mrs J Picket - Owner					1
W.H. Brakspear & Sons plc - Mr A.Verey	2	1	2		1
Tenderers	2	1			
Local Authority SODC - Mr. Eve				2	4

PLANNING SERVICE HPT
18 APR 2002