proposed elevations

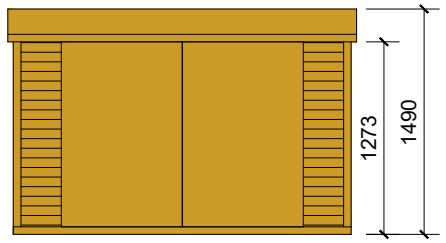

Front 1:50

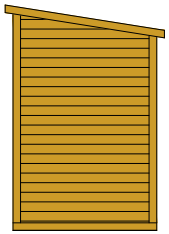

Side 1:50

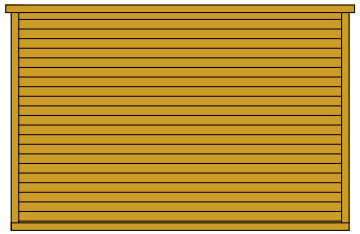

Rear 1:50

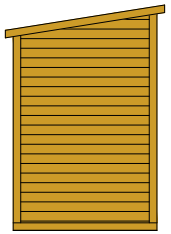

Side 1:50

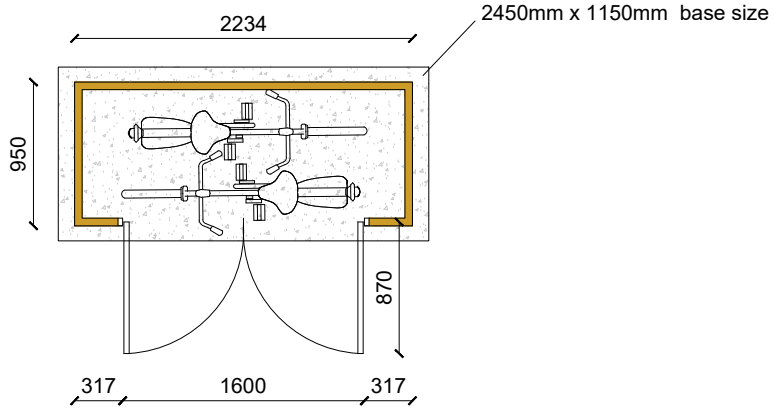

Floor plan 1:50

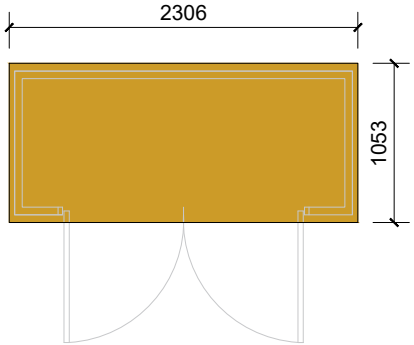

Floor plan with lid 1:50

scale bar

Drawing title	Floor plans and elevations
Project	Proposed travellers site
Address	Three Mile Cross Wokingham, RG7 1NP
Client	
Scales	1:50
Date	February 2026
Drawing Number:	GP/06/26 Rev

Architectural elements

Imagean Designs Ltd
La Carrerie, Marseille Jouvenus, Normandie, France, 27260
Tel: office 0033 [illegible] Mobile: [illegible]
email: imageandesignsltd@live.co.uk

Registered Company no. [illegible]
Address: Suite 2, Roseville 165 Lutterworth Road, Leicester, LE8 4DY

© Copyright Imagean Designs Ltd
Do not scale from this drawing