Product Specification

AVALON WALLPACK

Dextra GROUP PLC

MADE IN BRITAIN®

INTRODUCTION

The Avalon Wallpack uses the high efficiency premium mid power LEDs ensuring low energy consumption combined with minimal maintenance. The Avalon Wallpack has a die cast aluminium rear and comes with either clear or opal diffuser options.

With 2710llm luminaire lumen output the Avalon Wallpack offers an excellent replacement for 70w HID fittings, however with the added benefit of significantly reduced energy consumption. The Avalon Wallpack is also available with optional integral photocell ensuring dusk to dawn operation, integral microwave sensors for presence detection. We offer a range of wireless control systems providing localised grouping and control as well as comprehensive wireless solutions allowing both standard and emergency luminaires to be centrally monitored.

UK CA CE IP65 IK09 TM21: L90>60K HOURS / L80>100K HOURS 3 STEP MACADAM ELLIPSE TM66 CEAM Score: 2.5

APPLICATION

- Commercial & Offices
- Education
- Exterior
- Healthcare & Social Housing
- Hotel & Leisure
- Industrial & Manufacturing
- Parking & Exterior
- Retail
- Transport
- Warehousing

SPECIFICATION

CONSTRUCTION

- Housing: High pressure die cast aluminium
- Finish: Matt black
- Diffuser: Injection moulded high transmission opal polycarbonate
- Diffuser: Injection moulded clear polycarbonate
- IK09
- IP65

PERFORMANCE

- Part L2 compliant
- 3SDCM Three step Macadams ellipse
- TM21: L90>60K Hours / L80>100K Hours
- Up to 127 luminaire lumens per circuit Watt.

ENVIRONMENTAL

- Designed to allow simple replacement of components with commonly available tools in compliance with the Eco Design Directive, please see the installation leaflet for maintenance instructions.
- All critical components are mounted on a single tray for simple end of life repair or upgrade.
- Powered by European branded drivers and emergency modules ensuring replacement parts are easily sourced.
- Every luminaire is labelled with a unique ID number allowing easy identification of spare parts for the lifetime of the product.
- Contains no single use plastics or polystyrene packaging.
- Supplied in plain card boxes with paper tape ensuring packaging is easily recycled.

- Designed to allow simple disassembly for end of life recycling.
- UK based manufacturing providing local support throughout the product lifetime and minimising transportation miles.

EMERGENCY

- Available with optional standard, self test and autotest integral emergency with lithium batteries for extended warranty and lifetime.
- Optional Reacta-Link wireless emergency for automated centralised reporting.
- Optional Reacta-Control wireless emergency for automated centralised reporting.
- Optional central battery changeover relay

CONTROL

- Optional compatibility with a range of dimming systems including DALI, DSI and Switch Dimming
- Optional Integral R25 microwave presence and bright out sensor
- Optional integral Reacta-Link for integration with Reacta-Link wireless installations
- Optional integral photocell

INSTALLATION

- Suitable for conduit installation
- Suitable for external surface installation

VARIATIONS

- Available with a wide range of colour temperatures and renderings
- Available in a range of lumen outputs

IMAGES

PRODUCT IMAGES

Avalon Wallpack Clear

Avalon Wallpack Opal

PROJECT IMAGES

A school using the Avalon Wallpack LED

TECHNICAL

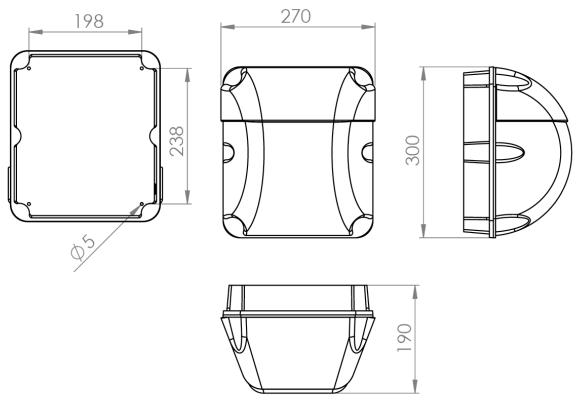

Avalon Wallpack

WARRANTY

At Dextra our commitment to service has been at the forefront throughout our history spanning more than forty years in the UK lighting market. Our service ethos extends beyond design and delivery, we believe supporting your installation throughout the warranty period is equally crucial, whilst the strength and longevity of Dextra Group provides peace of mind that our warranty will be supported throughout.

The Dextra range is supplied with a five year warranty commencing from the date of delivery. During the first three years defects will be repaired on site and the warranty will include both parts and labour. For the final two years drivers, emergency modules, wireless modules, sensors and LED circuits will be supplied free of charge to replace defective components, labour and other associated costs are not included.

Certain ranges and components are subject to exemptions:

- Lithium batteries are provided with a five year warranty. During the first three years defects will be repaired on site and the warranty will include both parts and labour. For the final two years replacement batteries will be supplied free of charge to replace defective components. Five year warranty became effective as of 03/02/25, Lithium emergency luminaires supplied prior to this date are supported with a three year on site warranty only. Labour and other associated costs are not included. Nickel Metal Hydride and Nickel Cadmium batteries are provided with a one year warranty for parts and labour.

- Emergency luminaires including AME2, EXI LED, EXI3, HBE3, HBE4, OAT2 LED and Twinspot are supplied with a one year warranty for parts and labour. Lithium variants suffixed with the 5YR part code, the Autotest emergency with the LA3 part code and wireless variants with LA3RC or LSTR part codes are supplied with a five year warranty. For these extended warranty variants for the first three years defects will be repaired on site and the warranty will include both parts and labour. For the final two years replacement batteries will be supplied free of charge to replace defective components.

- Protec Micro, PTECF7 Fire Rated Downlights, Serenus and the Opus Sconce are provided with a five year replacement luminaire only warranty. Protec FR Fire Rated Downlights are provided with a 2 year replacement luminaire only warranty.

- Controls systems such as standalone sensors, switches, marshalling boxes and cabling are provided with a one year warranty for both parts and labour. DALI control systems are provided with a two year warranty for both parts and labour.

- LEDextra ranges are supplied with a three year parts or replacement luminaire only warranty with the exception of the IMPR RGBW, the Runway RBGW, the MOD RGBW, Tanek RGBW and the DexRing. These five ranges are supplied with our standard five year warranty during which defects within the first three years will be repaired on site and the warranty includes both parts and labour. For the final two years free of charge replacement components only will be supplied to rectify any failures but labour and other associated costs are not included.

- LEDEX ranges are supplied with a three year replacement luminaire only warranty.

- The Decorative Pendant ranges, Bebo, Dene, Nova, Fino and Stix are supplied with a 3 year replacement luminaire only warranty.

All warranties are subject to correct use of the product and will be invalidated by misuse, for example incorrect installation, unsuitable environmental conditions or incorrect maintenance. It is the duty of the customer to ensure that all the fault lies with the luminaire prior to requesting replacement parts or site repairs. In the event that no defect is found with the product our costs for attending site will be recharged to the customer and credit

will not be issued against returned products. No consequential losses incurred resulting from any defect with our product will be reimbursed.

Given the nature of LED technology a small percentage of LEDs may fail during the lifetime of a luminaire, this does not cause a reduction in lumen output. As such LED luminaires are only deemed to be faulty for warranty purposes when in excess of ten percent of LEDs have failed in a single luminaire.

On site repair of products under warranty will be undertaken during normal working hours, 9am to 5pm Monday to Friday, and will require unrestricted access to luminaires. Where required Dextra will provide access equipment to carry out repairs at height, should luminaires have been installed in locations where reasonable provision for maintenance access has not been made we reserve the right to supply replacement product only. On site warranty repairs will only be undertaken on the mainland of the UK and Ireland, in all other locations replacement product only will be provided.

If you require any assistance with regards to our products please contact our Customer Services department on 01747 858100.

ORDER CODES

LUMINAIRE

Code	Description	Power	Llm/W
AVAWP2 L30 OP	Avalon Wallpack, 2,354llm, Opal Diffuser, Colour 84.	21.0W	112
AVAWP2 L30 CL	Avalon Wallpack, 2,670llm, Clear Diffuser, Colour 84.	21.0W	127

DIMMING

Code	Description
A	DALI Digital Addressable Lighting Interface

CONTROL

Code	Description
DN	DexNET Node, Wireless Node only.
R25E	Reacta 25, Presence & Bright Out, On / Off, 2.5-4M
R25C*	Reacta 25, Presence & Bright Out, Bi-Level Dimming, 2.5-4M
PH	Photocell
RLI	Reacta-Link, Wireless Enabled Luminaire
RLM	Reacta-Link, Wireless, Presence & Bright Out, 2.5-4M
RC	Reacta-Control, Wireless Enabled Luminaire
RCMC*	Reacta-Control, Presence & Bright Out, Bi-level Dimming, 2.5-4M
RCME	Reacta-Control, Presence & Bright Out, On / Off, 2.5-4M
Please click here for full details on our wireless controls.	
*Bi-Level Dimming will only dim the luminaire to 10% during absence and brightout, it will not turn the luminaire off.	

EMERGENCY

Code	Description
LE3	Lithium Standard Emergency 3 Hour
LS3	Lithium Selftest Emergency 3 Hour
LA3	Lithium Autotest Emergency 3 Hour
LA3D	Lithium DexNET Emergency 3 Hour
LSTR	Lithium Reacta-Link Emergency 3 Hour
LA3RC	Lithium Reacta-Control Emergency 3 Hour

MISCELLANEOUS

Code	Description
C**	Select Colour Temperature and Rendering; C827, C83, C85, C865, C93, C94
TRS	Tamper Resistant Screws
TRS INSTALL KIT	Tamper Resistant Compatible Screwdriver Heads
LSF	Low Smoke Zero Halogen

Avalon Wallpack Installation

220-240V / 50-60Hz
IP65

Terminal Labelling:

Power	
L1	Switched Live
E	Earth
N	Neutral
Emergency	
L2	Unswitched Live
DA/AT3	DALI Autotest
DA/AT3	DALI Autotest
Dimming	
-/D1/DA	Analogue/DSI/DALI
+/D2/DA	Analogue/DSI/DALI
L3	Switch Dim / Corridor Function

WARNING: Luminaire must be earthed. Risk of electric shock from LED boards if operated with cover removed. Installation / operation outside of luminaires intended scope invalidates warranty. Suitable only for domestic / light industrial / industrial applications within the scope of EN55015. Tested to compliance with BSEN 60598: specification for general requirements and tests. Must be installed by a suitably qualified person in accordance with all relevant legislation. Ambient operating temperature of 0°C to 25°C. If maximum operating temperature is exceeded luminaire will automatically dim / switch off. Terminal blocks are rated to 16A unless stated otherwise. The light source is non replaceable**. LUMINAIRES WITH EMERGENCY PACK**: When supply is isolated battery output terminals may be live if battery is connected. Isolate mains and battery before servicing. Emergency luminaires require unswitched live connection taken from same phase as switched supply. When unswitched supply is connected status indicator illuminates green, when unswitched supply is disconnected indicator extinguishes and luminaire operates in emergency mode. 24 hour charge period required before undertaking full discharge test. Emergency test sheets provided should be used to record all emergency tests. Batteries should be replaced when 3 hour duration is not met. Excessive switching of permanent live may result in premature battery failure. Battery electrolyte can be harmful to eyes / open wounds, do not puncture, if electrolyte touches skin / eyes flush with water. Do not incinerate batteries.

1.

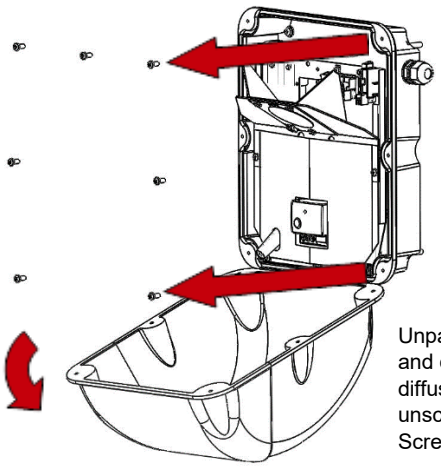

Unpack luminaire and carefully lower diffuser down by unscrewing 7No. Screws.

2.

Remove gear tray by unscrewing 2No. M4x5 screws and 1No. M5x6 screw.

Lower tray gently on its tethers.

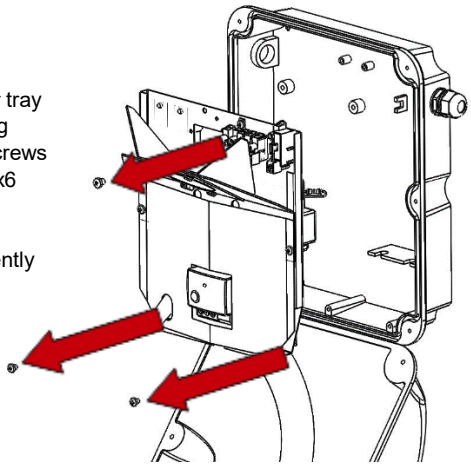

3.

Secure base to wall through 4No. Holes. Washers to be used with screws (not supplied) to maintain IP rating. Any unused holes MUST be filled to retain IP65 rating.

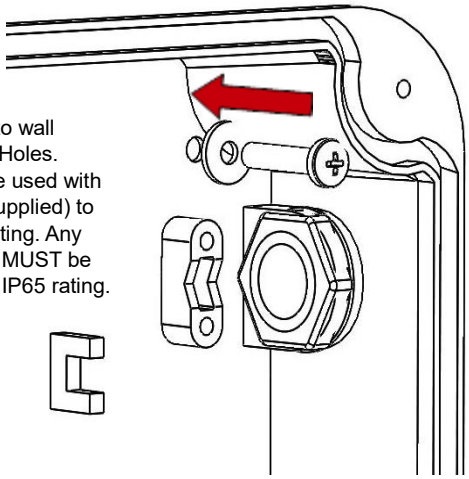

4.

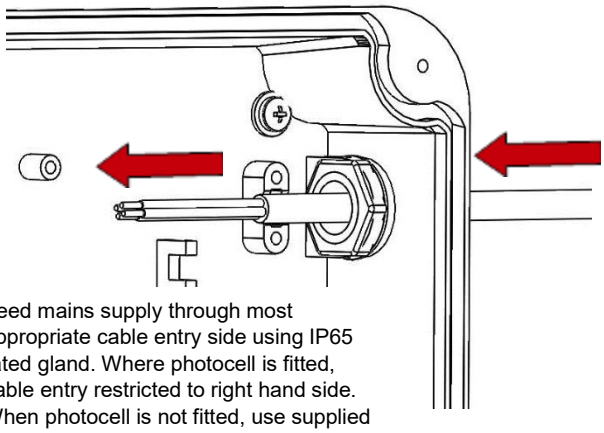

Feed mains supply through most appropriate cable entry side using IP65 rated gland. Where photocell is fitted, cable entry restricted to right hand side. When photocell is not fitted, use supplied bung to fill unused cable entry hole.

5.

Wire mains cable into relative terminals.
All terminals are marked.

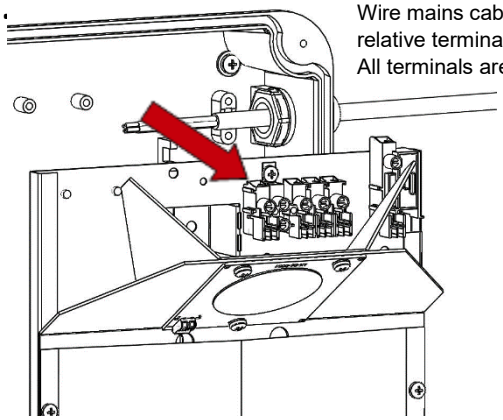

6.

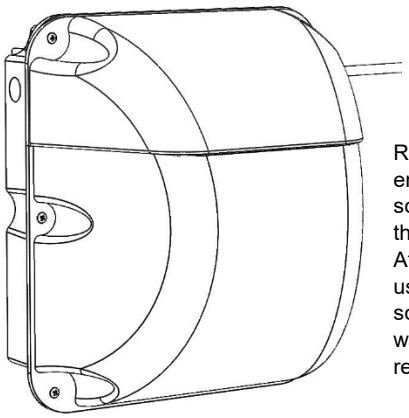

Reattach gear tray ensuring M5x6 screw is fed through earth lead. Attach diffuser using 7No. M4x8 screws ensuring washers are retained.