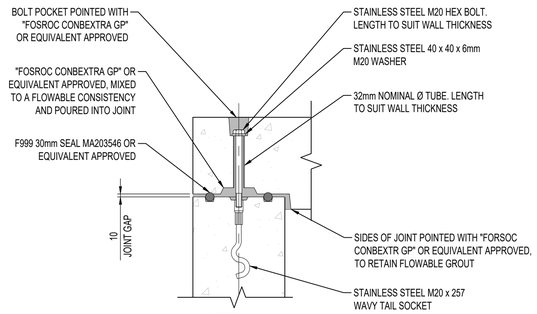

DETAIL 1
(REF. DRG. -2500)
WALL TO WALL CORNER JOINT
SCALE 1:10

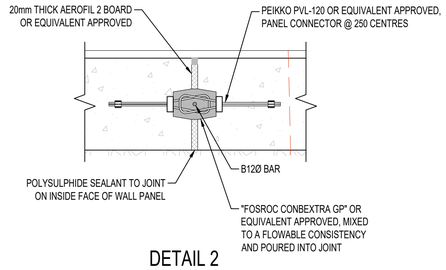

DETAIL 2
(REF. DRG. -2500)
VERTICAL WALL JOINT
SCALE 1:10

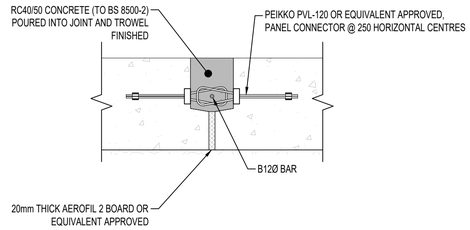

DETAIL 3
(REF. DRG. -2500)
BASE SLAB JOINT
SCALE 1:10

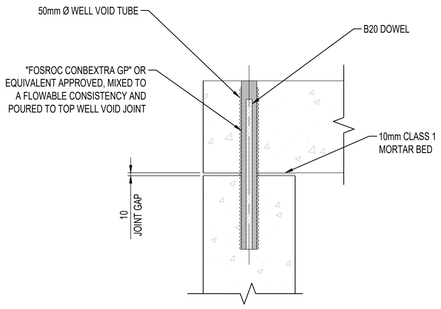

DETAIL 4
(REF DRG. -2500)
COVER SLAB TO WALL JOINT
SCALE 1:10

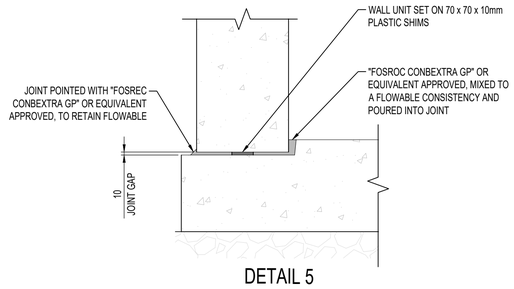

DETAIL 5
(REF. DRG. -2500)
EXTERNAL WALL TO BASE JOINT
SCALE 1:10

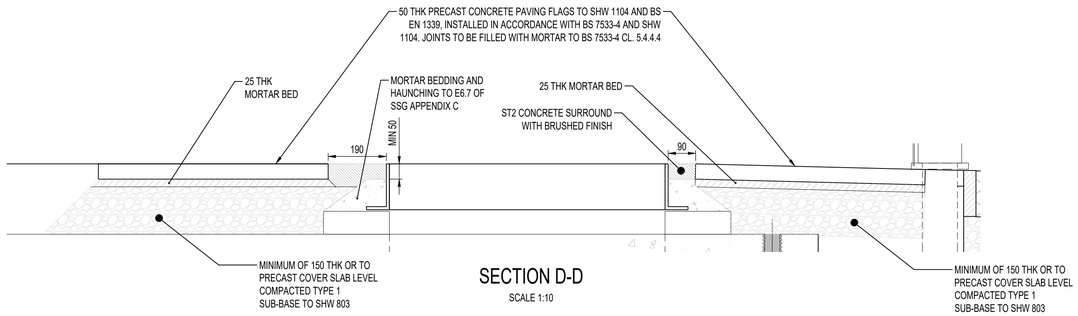

SECTION D-D
SCALE 1:10

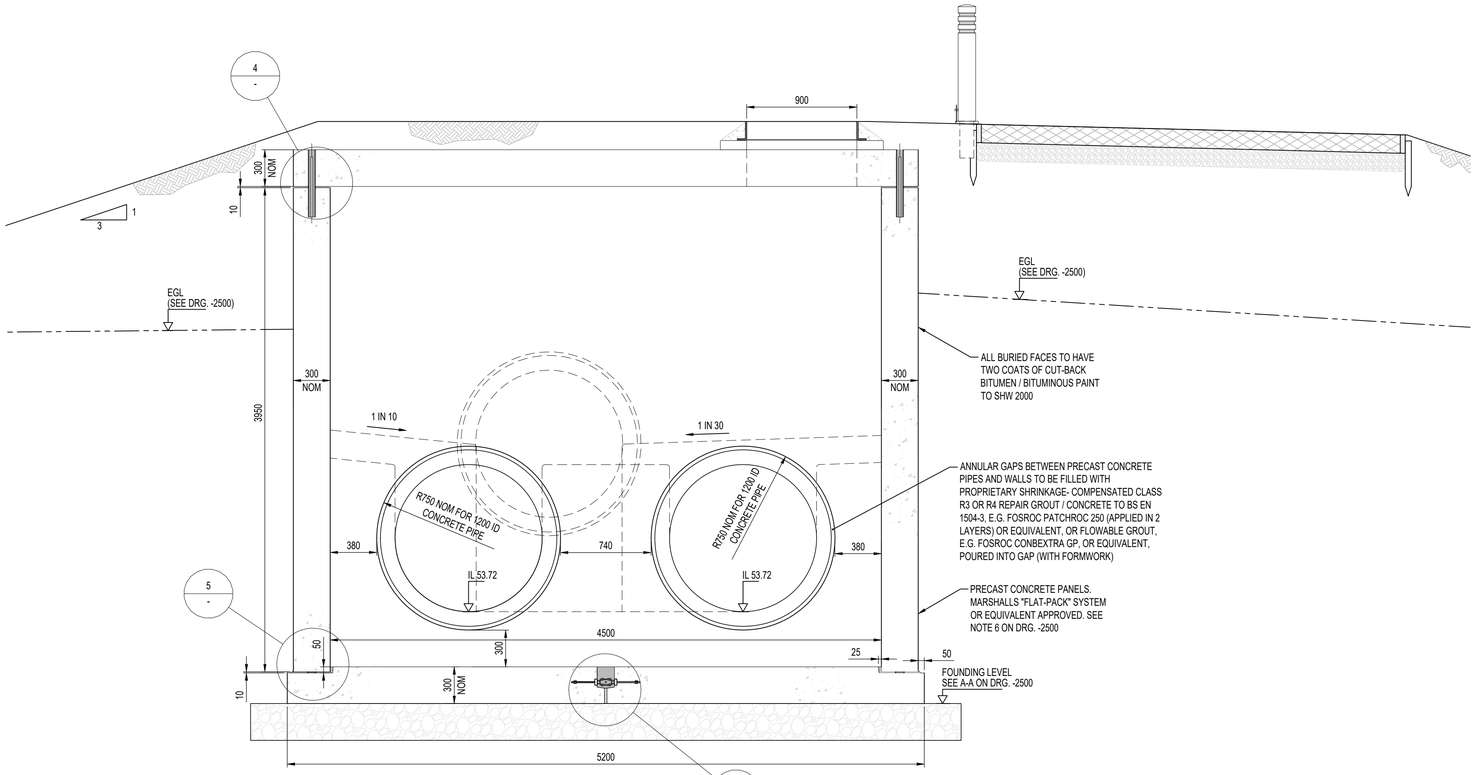

SECTION C-C
(REF. DRG. -2500)
SCALE 1:25

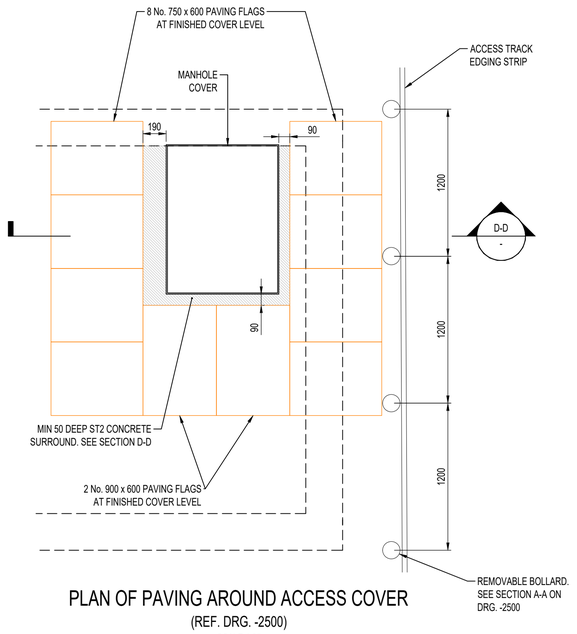

PLAN OF PAVING AROUND ACCESS COVER
(REF. DRG. -2500)
SCALE 1:25

500mm 0 500mm 1000mm 1500mm 2000mm 2500mm
SCALE 1:25

200mm 0 200mm 400mm 600mm 800mm 1000mm
SCALE 1:10

DO NOT SCALE

NOTES:

1. ALL DIMENSIONS ARE IN MILLIMETRES UNLESS NOTED OTHERWISE.
2. ALL LEVELS ARE IN METRES AOD UNLESS NOTED OTHERWISE.
3. DIMENSIONS AND LEVELS SHOWN ON DRAWING ARE TO BE CONFIRMED AT DETAILED DESIGN BY MANUFACTURER OF PROPRIETARY MANHOLE SYSTEM.
4. THIS DRAWING SHALL BE READ IN CONJUNCTION WITH DRG. WMHP-TG-SRWG1-DR-DD-2500.
5. ALL BOLTS, WASHERS AND WAVY TAIL CAST-IN ITEMS TO BE STAINLESS STEEL GRADE A2-70.

KEYPLAN

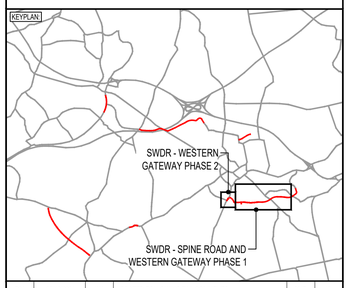

REV	DATE	BY	DESCRIPTION	CHK	APP
P03	27/10/2021	WA	UPDATED FOLLOWING TAA COMMENTS	CMF	KL
P02	22/09/2021	BPH	DETAILED DESIGN FOR S104 APPLICATION	KL	CMF
P01	16/07/2021	AJT	FIRST ISSUE	KL	CMF

DRAWING STATUS: SUITABLE FOR REVIEW & COMMENT — S3

DESIGNER:

Tony Gee
Tony Gee and Partners LLP
Hardy House
140 High Street
Esher, Surrey
KT10 9QJ
Tel: 01372 461600
www.tonygee.com
Consulting Civil, Structural and Geotechnical Engineers

CONTRACTOR: Balfour Beatty

CLIENT:

WOKINGHAM BOROUGH COUNCIL
Shute End, Wokingham, Berkshire RG40 1BN
Tel: (0118) 974 6000 Web: www.wokingham.gov.uk

PROJECT:
WOKINGHAM MAJOR HIGHWAYS PROGRAMME
SPINE ROAD AND WESTERN GATEWAY PHASE 1

TITLE:
THAMES WATER CULVERT
BESPOKE MANHOLE TWS01
GENERAL ARRANGEMENT
SHEET 2

SCALE @ A1:	CHECKED:	APPROVED:
AS SHOWN	KL	CMF

PROJECT NO:	DESIGNED:	DRAWN:	DATE:
C118047	WA	AJT	July 21

DRAWING No:	REV:
WMHP-TG-SRWG1-DR-DD-2501	P03

File name P:\BLO\DATA\PROJECTS\2018\C118047\BIM\H-W\PDR\WINGS\WMHP-TG-SRWG1-DR-DD-2501.DWG, printed on 04 November 2021 10:22:59, by KH