PLANE ARBORICULTURE LIMITED
info@plane-arboriculture.co.uk
20 Sycamore Drive, Kings Worthy, Winchester, SO23 7NW
t. +44 (0)1962 383 525
www.plane-arboriculture.co.uk

ARBORICULTURAL IMPACT ASSESSMENT AND METHOD STATEMENT

Site address:

Thornwood House, Canhurst Lane, Knowl Hill

23 October 2026

Ref: AIAMS26-1010

Plane Arboriculture Limited is registered in England and Wales. Registered Office: 20 Sycamore Drive, Kings Worthy, Winchester, SO23 7NW. Company Number: 9806671
Arboricultural Association Technician Member No. TE04008. Quantified Tree Risk Assessment Registered User No. 1304

ARBORICULTURAL METHOD STATEMENT

Site address: Thornwood House, Canhurst Lane, Knowl Hill

Instructed by: Mr & Mrs J Williams

Prepared by: Thomas Gregory DipArbL4 (ABC) TechArborA

Date: Friday, 23 October 2026

Report Ref: AIAMS26-1010

TABLE OF CONTENTS

1 INTRODUCTION ..... - 2 -
1.1 SCOPE ..... - 2 -
1.2 TREE SURVEY METHODOLOGY ..... - 2 -
1.3 TREE SURVEY OUTLINE ..... - 3 -
1.4 STATUTORY TREE PROTECTION ..... - 3 -
1.5 PROTECTED SPECIES ..... - 3 -

2 ARBORICULTURAL DEVELOPMENT SURVEY ..... - 4 -
2.1 TIME OF SURVEY ..... - 4 -
2.2 GROUND AND SITE CONDITIONS ..... - 4 -
2.3 TREE ASSESSMENT ..... - 4 -

3 ARBORICULTURAL IMPACT ASSESSMENT ..... - 5 -
3.1 DESIGN AND LAYOUT ..... - 5 -
3.2 UTILITIES AND SERVICES ..... - 5 -
3.3 CONSTRUCTION ACTIVITIES ..... - 6 -
3.4 TREE WORK RECOMMENDATIONS ..... - 6 -
3.5 CONCLUSION ..... - 6 -

4 ARBORICULTURAL METHOD STATEMENT ..... - 7 -
4.1 PRE-COMMENCEMENT ON-SITE MEETING ..... - 7 -
4.2 GENERAL REQUIREMENTS ..... - 7 -
4.3 SITE ACCESS ..... - 7 -
4.4 TREE WORK RECOMMENDATIONS ..... - 8 -
4.5 TREE PROTECTION BARRIERS ..... - 8 -
4.6 SUPERVISION ..... - 9 -
4.7 CONSTRUCTION ACTIVITIES ..... - 9 -
4.8 UTILITIES AND SERVICES ..... - 9 -
4.9 RESTRICTED ACTIVITIES ..... - 9 -
4.10 ARBORICULTURAL COMPLETION ..... - 10 -
4.11 CONCLUSION ..... - 10 -

5 APPENDICES ..... - 11 -

1 INTRODUCTION

1.1 SCOPE

I have been instructed by John and Claire Williams to prepare an Arboricultural Impact Assessment and Method Statement to cover all trees located within the site and those offsite that may influence development and to demonstrate that the proposed development is achievable in arboricultural terms.

This report has been produced in accordance with British Standard 5837:2012 Trees in relation to design, demolition and construction – Recommendations (BS5837). It is intended to demonstrate the site's arboricultural constraints and assist in the design process. The objective is to assess the trees and other vegetation onsite and provide suitable recommendations regarding the proposal's potential impact on trees and vice versa.

1.2 TREE SURVEY METHODOLOGY

Visual inspection of all trees within the site boundary was undertaken from ground level, with binoculars used where necessary to assist crown assessment. Each tree was assigned a unique reference number corresponding to the Tree Constraints Plan in Appendix 2, and its position accurately plotted onto the survey drawing.

A detailed survey schedule was prepared, recording:

- tree number and common name
- stem diameter at 1.5 m above ground level (or in accordance with Annex C of BS5837)
- approximate height
- crown spread (cardinal points)
- crown clearance
- age class
- any specific observations or management recommendations

Only defects considered significant to a tree's health, structural integrity, or risk profile were recorded, and any recommended works relate solely to those findings.

Each tree was objectively assessed and assigned a retention category in accordance with BS5837:2012, as follows:

- Category A – high quality, with an estimated remaining life expectancy of at least 40 years
- Category B – moderate quality, with an estimated remaining life expectancy of at least 20 years

- Category C – low quality, with an estimated remaining life expectancy of at least 10 years, or young trees with stem diameters below 150 mm
- Category U – trees unsuitable for retention beyond 10 years in the context of existing land use

For all Category A, B and C trees, Root Protection Areas (RPAs) were calculated to identify the minimum area required to safeguard sufficient rooting volume to maintain long-term viability. These RPAs were derived using the methodology set out in Section 4.6 and Annex D of BS5837.

No soil analysis was undertaken during the visit, and no assessment has been made regarding potential indirect damage such as tree-related subsidence.

1.3 TREE SURVEY OUTLINE

Trees are dynamic living organisms whose condition changes over time in response to growth and environmental factors. For this reason, the findings and recommendations within this report are valid for a period not exceeding 12 months from the date of issue.

1.4 STATUTORY TREE PROTECTION

No formal checks have been made by Plane Arboriculture Limited with the local planning authority in respect of statutory tree protection. It is strongly recommended that the local planning authority is contacted prior to any works being carried out and an application submitted if appropriate. This is to ensure that necessary permissions are sought if required to avoid an offence being committed.

1.5 PROTECTED SPECIES

It is strongly recommended that trees are checked for protected species before works are undertaken. It is against the law to disturb bats or their roosts under the Conservation of Habitat and Species Regulations. Nesting birds are protected by the Wildlife and Countryside Act. If protected species are discovered, Natural England should be contacted for advice.

2 ARBORICULTURAL DEVELOPMENT SURVEY

The 'Tree Survey Schedule' can be found in 'Appendix 1' and the 'Tree Constraints Plan' can be found in Appendix 2'.

2.1 TIME OF SURVEY

The tree survey was undertaken during the morning of Friday, 2 October 2026, under suitable conditions for a detailed ground-level inspection.

2.2 GROUND AND SITE CONDITIONS

The site comprises a detached dwelling set within a large residential plot, accessed from the public highway via a long private gated driveway. The driveway ascends towards the north of the site and terminates at an extensive parking and turning area located immediately in front of the dwelling.

The grounds comprise a mixture of managed lawn, hardstanding and landscaped areas. A grassed area is located to the east of the driveway, whilst a pond and an extensive area of mature tree cover occupy the western part of the site. A swimming pool and separate pool house are situated within the grounds to the south-east of the dwelling.

Given the presence of multiple trees within and immediately surrounding the site, arboricultural consideration is required to inform any future use or development proposals.

2.3 TREE ASSESSMENT

A total of 14 individual trees and 1 group are located within and around the site and the objective assessment resulted in BS5837 category of 'A', 'B' and 'C' being attributed to them.

6 individual trees and 1 group were assessed as low-quality ('C' and/or 'U' category) specimens. These trees offer limited arboricultural or landscape value and, as such, should not be considered a significant constraint to the site layout.

8 individual trees were identified as higher-quality ('A' and/or 'B' category) specimens. These trees have greater individual merit and should be retained and integrated into the site layout wherever feasible.

The survey data and site observations have been used to illustrate the site's arboricultural restrictions in the form of a Tree Constraints Plan (TCP) which can be found at Appendix 2.

3 ARBORICULTURAL IMPACT ASSESSMENT

The 'Arboricultural Impact Assessment Plan' can be found in 'Appendix 3'. In order to achieve the protection of trees which are suitable for retention, the potential impact on trees and their environment from the proposed development should be considered and vice versa.

3.1 DESIGN AND LAYOUT

The design and layout of the site aims to incorporate the components of all trees on the property (crown and rooting area) as far as possible and provides a suitable level of clearance to allow for their long-term safe retention, i.e. root protection area and crown clearance.

Future pressure to prune or remove trees is often a concern when building close to existing trees. The relationship between the trees and the proposals has been considered at length, and the threat of future pressure is not considered likely to increase in this instance due to: the limited change in size and positioning of the building; the open plan layout; and the building materials used.

The proposed development is largely confined to the footprint of the existing building and does not result in any encroachment into the Root Protection Areas (RPAs) or crown spreads of retained trees. As such, no direct arboricultural impacts are anticipated in relation to retained tree cover.

One tree is proposed for removal (T8); however, this requirement is not a consequence of the proposed development. The tree is located in close proximity to the existing dwelling and has been identified for removal on arboricultural management grounds. Given its low quality and limited contribution to local amenity, its removal is not considered to result in any material adverse impact on the arboricultural or visual character of the site.

Overall, the proposals provide sufficient space and appropriate construction methodologies to allow for the long-term safe retention of the retained trees, with adequate clearance maintained in relation to both RPAs and crown spreads.

3.2 UTILITIES AND SERVICES

It is expected that existing above and below-ground services will be sufficient. However. Should this not be the case, all new above and below-ground services shall be arranged and routed to avoid the root protection areas of the retained trees where possible. Any existing underground services etc. which are to be reused but are found to require work or renewal, should be reinstated whilst respecting the root protection area requirements.

3.3 CONSTRUCTION ACTIVITIES

All deliveries, parking, associated vehicle movements, materials storage and handling, and site welfare provision should also respect root protection areas of retained trees.

3.4 TREE WORK RECOMMENDATIONS

In the interests of maintaining good quality tree cover and in order to facilitate the development, one tree is proposed for removal, and some minor pruning will be necessary.

3.5 CONCLUSION

I am content that this development is achievable in arboricultural terms subject to various tree protection measures specified and adhered to during the construction process.

4 ARBORICULTURAL METHOD STATEMENT

The 'Tree Protection Plan' can be found in 'Appendix 4'.

The root protection areas of the principal trees have been assessed and the findings recorded in the tree survey and illustrated on the Tree Protection Plan. As some of these trees are vulnerable to inadvertent damage from this proposed development, the following guidance should be observed to prevent damage or other long-term harm.

4.1 PRE-COMMENCEMENT ON-SITE MEETING

A pre-commencement on-site meeting shall be arranged by the client, or on their behalf by their appointed project manager. This meeting shall include the main contractor and the supervising arboricultural consultant (with the Local Planning Authority Tree Officer invited to attend).

The purpose of this meeting is to run through the tree protection measures set out in this report and to ensure adherence to the method statement. Any variation from the methodology described in this method statement shall be discussed with the supervising arboricultural consultant and agreed with the Local Planning Authority.

4.2 GENERAL REQUIREMENTS

A hard copy of the arboricultural method statement and tree protection plan shall remain onsite for the duration of demolition, construction and landscaping works and be available to site operatives at all times. All operatives at the site shall be briefed about tree related factors as part of their site induction.

Any variation from the methodology described in this method statement shall be discussed with the supervising arboriculturalist and agreed with the Local Planning Authority.

4.3 SITE ACCESS

The access to and from the site for development purposes shall be via the existing entrance. Depending on the type and size of vehicles accessing the site, a banksman shall be employed to oversee delivery arrivals and unloading to ensure that materials and plant are all delivered outside of the root protection areas.

Any inadvertent damage to trees and hedgerows which occurs shall be immediately referred to the Local Planning Authority and any pruning works deemed necessary and consented by the Local Planning Authority shall be in accordance with BS3998:2010 Tree Work – Recommendations.

4.4 TREE WORK RECOMMENDATIONS

In the interests of maintaining good quality tree cover and in order to facilitate the development, one tree will be removed and some minor pruning will be necessary. The tree work recommendations are recorded in the 'Tree Works Schedule' which can be found at Appendix 1.

This shall be carried out as the first stage of development and shall be in accordance with BS3998:2010 Tree Work – Recommendations.

Trees shall be checked for protected species before works are undertaken. It is against the law to disturb bats or their roosts under the Conservation of Habitat and Species Regulations. Nesting birds are protected by the Wildlife and Countryside Act. If protected species are discovered, Natural England shall be contacted for advice.

4.5 TREE PROTECTION BARRIERS

The root protection areas of retained trees must be left free from disturbance and protected from contamination or compaction during the proposed works.

Following the initial tree works, but prior to the commencement of any development activity including demolition and site clearance or any construction traffic entering the site, tree protection barriers shall be installed as per BS5837:2012 Figure 2 (a copy of which can be found in 'Appendix 5'). These barriers shall be robust and fit for purpose and shall be installed as shown on the 'Tree Protection Plan' where it refers to 'Tree Protection Fencing.

In addition, scaffold boards shall be fixed to the fencing at ground level in order to act as a barrier restricting liquified soils entering RPAs, particularly during wet weather conditions.

Tree protection fencing notices shall be printed off in colour and laminated and shall be securely fixed to the tree protection barriers at 5m intervals, this can be found in 'Appendix 6'.

The areas protected by fencing shall be referred to as the construction exclusion zones.

The following actions shall be prohibited within the construction exclusion zones:

- Vehicular access;
- Regular pedestrian access unless on suitable ground protection;
- Storage of construction materials;
- Storage or handling of harmful chemicals;
- Any change in ground level;
- Construction activities including hard surfacing.

The barriers and notices are then to remain securely in place and be maintained for the full duration of the development unless otherwise agreed in writing by the Local Planning Authority.

4.6 SUPERVISION

A follow-up site meeting shall be arranged by the client, or on their behalf by their appointed project manager for the supervising arboricultural consultant to attend prior to the commencement of any development activity including demolition and site clearance or any construction traffic entering the site. The purpose of this visit is to ensure all protective measures are set up in the correct positions and fit for purpose.

Further arboricultural site supervision should not be necessary for the works on this site. However, the Local Planning Authority may require a planning condition that demonstrates that any arboriculturally sensitive operations or activities on site are overseen and fully compliant with the method statement.

4.7 CONSTRUCTION ACTIVITIES

Materials storage and handling, contractor parking, site welfare activities etc shall be kept away from the root protection areas. It may be appropriate to restricted it to the existing parking area.

4.8 UTILITIES AND SERVICES

It is expected that existing above and below-ground services will be sufficient. However. Should this not be the case, all works shall be carried out in accordance with current best practice as detailed in BS5837:2012 and the NJUG Volume 4 guidelines.

Full details will be provided to and agreed in writing by the Local Planning Authority.

4.9 RESTRICTED ACTIVITIES

During the course of works onsite, all potentially tree-harmful operations such as, but not restricted to: the mixing of concrete, cement, paint, stain or adhesives; the storage or handling of tools and materials; the provision of staff welfare facilities such as portable chemical toilets; or the storage of skips and construction waste – shall be restricted to areas outside the root protection areas of the retained trees. Particular care should be taken to assess any levels and falls across the site, and to prevent accidental run-off of potentially harmful substances into the root protection areas of the retained trees, and to neighbouring land. Specific areas for the storage and handling of materials, the mixing of products and the disposal of potentially plant-harmful substances shall be identified and specifically allocated for these operations and activities at the pre-commencement meeting. It may be appropriate to restricted it to the existing parking area. There shall be no fires on the site whatsoever.

4.10 ARBORICULTURAL COMPLETION

Once the development is completed and just prior to the development being finally occupied, the temporary protection barriers shall be removed by hand. The adjacent trees shall then be visually inspected by the supervising arboriculturist for any signs of damage related to the development. If any damage is noted, appropriate remedial action shall be carried out.

These arboricultural details should be referenced against Arboricultural Development Survey ADS26-1010 dated 02/10/2026 and the Tree Protection Plan.

4.11 CONCLUSION

I am content that this development is achievable in arboricultural terms provided the above method statement is adhered to and would expect to see the Local Planning Authority place appropriate and reasonable conditions on this application in relation to tree protection measures.

5 APPENDICES

5.1 APPENDIX 1 – TREE SURVEY SCHEDULE ..... - 12 -
5.2 APPENDIX 2 – TREE CONSTRAINTS PLAN ..... - 15 -
5.3 APPENDIX 3 – ARBORICULTURAL IMPACT ASSESSMENT PLAN ..... - 17 -
5.4 APPENDIX 4 – TREE PROTECTION PLAN ..... - 19 -
5.5 APPENDIX 5 – DEFAULT SPECIFICAION FOR PROTECTVIVE BARRIER ..... - 21 -
5.6 APPENDIX 6 – TREE PROTECTION FENCING NOTICE A4 ..... - 23 -

5.1 APPENDIX 1 – TREE SURVEY SCHEDULE

KEY:

Height
Overall height estimated in metres

Crown clearance
Height of clearance from ground level to the lowest branches estimated in metres

Stem Diameter
Measured to the nearest 10mm at 1.5m above ground level unless otherwise stated (*average stem diameter)

Age Class	
Young	tree within first quarter of average life expectancy
Semi-mature	tree within second quarter of average life expectancy
Early-mature	tree within third quarter of average life expectancy
Mature	tree within final quarter of average life expectancy
Over-mature	tree beyond average life expectancy

Canopy Spread
Canopy spread measured in metres (Cardinal Points)

Physiological Condition	
Good	no health problems
Fair	symptoms of health problems that may be easily remedied
Poor	symptoms of health problems that cannot easily be remedied
Dead	dead

Structural Condition	
Good	no structural defects
Fair	structural defects that may be easily remedied
Poor	structural defects that cannot realistically be remedied

Survey date	Report reference	Surveyor	Site address
02 October 2026	ADS26-1010	Thomas Gregory	Thornwood House, Thornwood House, Canhurst Lane, Knowl Hill

Tree reference number	Common name	Height (m)	Crown clearance (m)	Number of Stems	Stem diameter 1 (cm)	Stem diameter 2 (cm)	Stem diameter 3 (cm)	Stem diameter 4 (cm)	Stem diameter 5 (cm)	Crown spread North (m)	Crown spread South (m)	Crown spread East (m)	Crown spread West (m)	Age class	Physiological condition	Structural condition	BS category grading	Observations	Recommendations	Notes
T1	Ash	18	6	1	45					6	4	5	7	Early-matur	Poor	Fair	C	Early signs of ash dieback. Sparse crown with significant volume of deadwood developing.	Monitor	
T2	Horse chest	16	2	1	35					4	3	5	4	Semi-matur	Fair	Fair	C	Wounding to buttresses on eastern side.	Crown lift to 4m over vehicular access.	
T3	Apple	4	2	1	31					2	3	3	3	Mature	Fair	Fair	C			
T4	Apple	3	2	11	15					2	3	3	3	Mature	Fair	Fair	C			
G5	Mixed speci	16	3	1	45					8	8	8	8	Semi-matur	Fair	Fair	C	Ash within group showing early signs of ash dieback.	Monitor ash	Species: ash, lime, yew, cypress
T6	Horse chest	12	2	1	52					5	5	5	5	Early-matur	Fair	Fair	B			
T7	Oak	16	2	1	59					8	8	9	9	Early-matur	Fair	Fair	B	Small volume of deadwood throughout crown.	diameter / 50cm length). Crown lift to clear 1m over pool house roof.	
T8	Cypress	8	0	2	40	15				3	3	3	3	Semi-matur	Fair	Fair	C		Fell to ground level in order to facilitate development	Restricted access, stem diameters estimated.
T9	Lime	18	3	1	60					5	5	5	5	Early-matur	Fair	Fair	B			Restricted access, stem diameter estimated.
T10	Field maple	6	2	1	17					2	3	3	1	Young	Fair	Fair	C			
T11	Oak	14	3	1	51					9	1	5	5	Early-matur	Fair	Fair	B			
T12	Oak	16	3	1	67					1	8	4	8	Mature	Fair	Fair	B		Remove major deadwood (over 50mm diameter / 50cm length).	

© Plane Arboriculture Limited

Tree reference number	Common name	Height (m)	Crown clearance (m)	Number of Stems	Stem diameter 1 (cm)	Stem diameter 2 (cm)	Stem diameter 3 (cm)	Stem diameter 4 (cm)	Stem diameter 5 (cm)	Crown spread North (m)	Crown spread South (m)	Crown spread East (m)	Crown spread West (m)	Age class	Physiological condition	Structural condition	BS category grading	Observations	Recommendations	Notes
T13	Owk	16	3	1	55					8	6	8	2	Mature	Fair	Fair	B		Remove major deadwood (over 50mm diameter / 50cm length).	
T14	Oak	14	2	1	56					8	8	8	8	Mature	Fair	Fair	A			
T15	Oak	16	2	1	63					9	8	10	8	Mature	Fair	Fair	B		Remove major deadwood (over 50mm diameter / 50cm length).	

© Plane Arboriculture Limited

5.2 APPENDIX 2 – TREE CONSTRAINTS PLAN


T1
T2
T3
T4
T5
T6
T7
T8
T9
T10
T11
T12
T13
T14
T15
G5
ST01 70.33
ST02 70.71
ST03 71.09
ST04 73.82
ST05 73.15
ST06 73.52
brick building
ridge level 75.57
eaves level 75.53
brick building
roof level 76.46
brick wall
boundary fence (H 1.80)
chainlink fence (H 1.60)
hedge (H 4.00)
timber shelter
timber shelter
(3) stone pillars
brick shed
swimming pool
flower bed
flower bed
flower bed

5.3 APPENDIX 3 – ARBORICULTURAL IMPACT ASSESSMENT PLAN


KEY
Proposed
Red dashed demo line
Site (house inc. existing gardens and driveway)
Ownership
72.87
Proposed level in box
73.02
Existing level omitted (lowered) by removing terrace plinth
Existing car parking
Existing car parking
Back Gate
South Terrace
Existing Pool
Canhurst Lane
Driveway
Sandhills
Driveway gates as existing
T1
T2
T3
T4
T6
T7
T8
T9
T10
T11
T12
T13
T14
T15
G5
5m
10m
N
PLANE ARBORICULTURE LIMITED
info@plane-arboriculture.co.uk
20 Sycamore Drive, Kings Worthy, Winchester, SO23 7NW
t. +44 (0)1962 383 525
www.plane-arboriculture.co.uk
Site: Thornwood House
1:200 at A1
Drawing Title: Arboricultural Impact Assessment
October 2026
Key:
Category A
Category B
Category C
Category U
Category
Crown Spread
Tree Number
Root Protection Area

5.4 APPENDIX 4 – TREE PROTECTION PLAN



PLANE ARBORICULTURE LIMITED
info@plane-arboriculture.co.uk
20 Sycamore Drive, Kings Worthy, Winchester, SO23 7NW
T: +44 (0)1962 883 595
www.plane-arboriculture.co.uk

Site: Thornwood House	1:200 at A1
Drawing Title: Tree Protection Plan	October 2026

Key:

- Category A
- Category B
- Category C
- Category U
- Tree Proposed for Removal
- Tree Protection Fencing

Category — Crown Spread
13 — Tree Number
Root Protection Area

5.5 APPENDIX 5 – DEFAULT SPECIFICAION FOR PROTECTVIVE BARRIER

Figure 2 **Default specification for protective barrier**

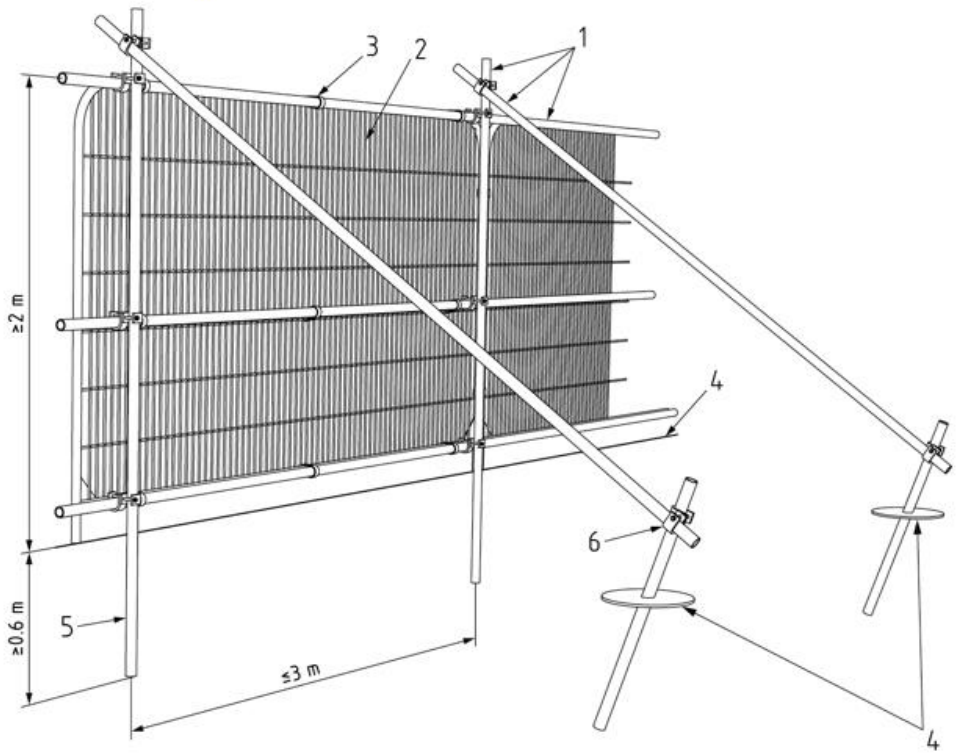

Key

1 Standard scaffold poles
2 Heavy gauge 2 m tall galvanized tube and welded mesh infill panels
3 Panels secured to uprights and cross-members with wire ties
4 Ground level
5 Uprights driven into the ground until secure (minimum depth 0.6 m)
6 Standard scaffold clamps

5.6 APPENDIX 6 – TREE PROTECTION FENCING NOTICE A4

CONSTRUCTION EXCLUSION ZONE
NO ACCESS

NO STORAGE OR OPERATIONS WITHIN FENCED OFF AREAS

NO DIGGING OR TRENCHING

NO STORAGE OF PLANT OR MATERIALS

NO VEHICLE ACCESS

NO FIRE LIGHTING

NO CHEMICAL HANDLING

PLANE ARBORICULTURE LIMITED
www.plane-arb.co.uk
+44 (0)1962 383 525