DRG. No.

THIRD ANGLE PROJECTION

DO NOT SCALE DRAWING – THIS BAR FOR GUIDANCE ONLY

FOR EXPLANATION OF DIMENSIONS, TOLERANCES, NOTES, ETC. SEE BS 308.

REMOVE ALL BURRS AND SHARP EDGES UNLESS STATED OTHERWISE

CONTRACT REF.

FELT UPTURN

ISSUE & DRG No.

ISS 1.
07.03.2000

# PROPOSED SIDE EXTENSION TO PROVIDE NEW GARAGE & STUDY

## FOR MR S HARPER AT 79 CHILTERN CRESCENT READING BERKS RGXX XXX.

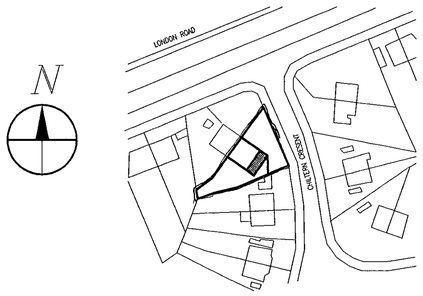


SITE PLAN
SCALE– 1:1250

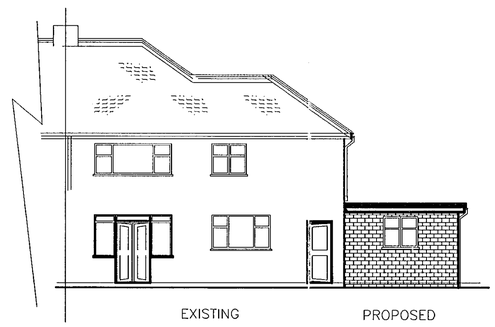


REAR ELEVATION




R. ELEVATION




FRONT ELEVATION

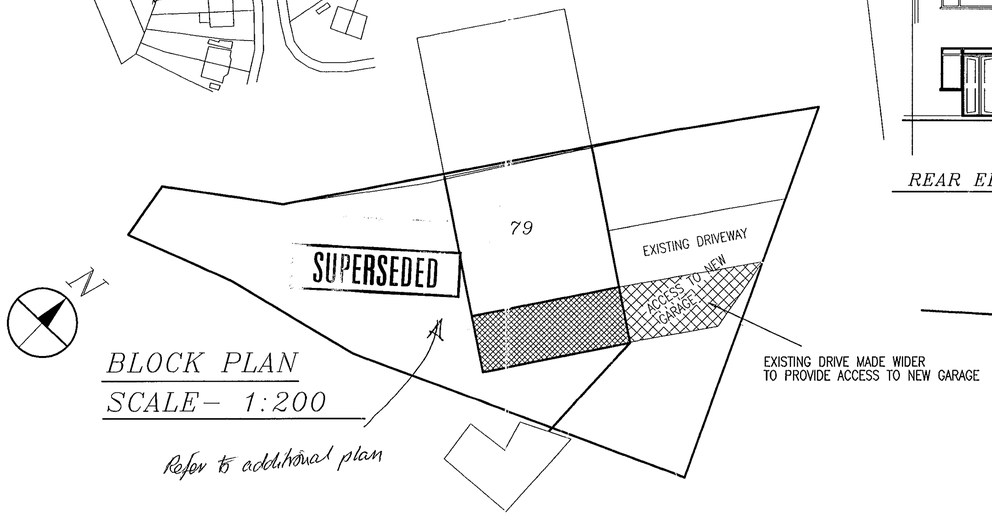


BLOCK PLAN
SCALE– 1:200

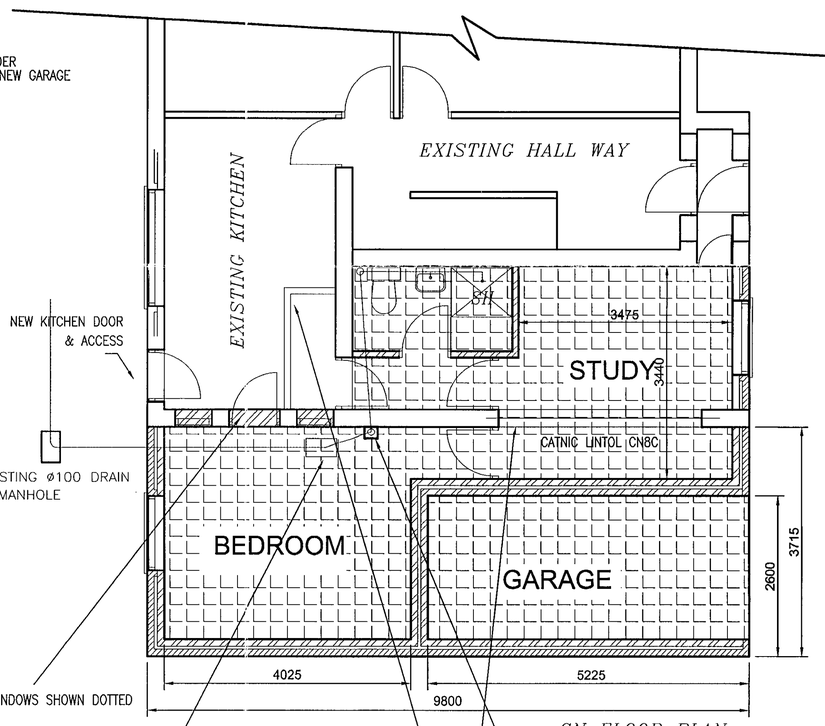


CN FLOOR PLAN

PROPOSAL:–

CONSTRUCT PROPOSED NEW STUDY AND GARAGE EXTENSION AT SIDE.
CREATE NEW OPENING FOR ACCESS. FIT LINTOL SUPPORT
MAKE GOOD ALL WALLS WHERE NECESSARY
FIT NEW FELT ROOF TO NEW EXTENSION.
NEW FLOOR TO COINCIDE WITH EXISTING
REMOVE EXISTING OUT BUILDING & W.C.
CAP OFF EXISTING DRAIN TO OLD W.C. RUN.
REMOVE MANHOLE COVER AND FIT NEW SCREWED DOWN
AIR–TIGHT AND WATER–TIGHT COVER TO EXISTING MANHOLES
WHERE SITED IN NEW FLOOR.

LINTELS:–

TO BE CATNIC MEMBERS CN7, CN6X & CN8B WITH INTERNAL INSULATION
FITTED AND TO BE USED AS SPECIFIED BY THE MANUFACTURERS.
FIT TO ALL NEW DOORS AND WINDOW OPENINGS.
TO CLAD:– USE 1,6 MM WIRE BINDINGS WITH 100 MM PITCH.
RENDERED WITH 13 MM SAND AND CEMENT WITH 5 MM GYPSUM
PLASTER AND SET FOR 1/2 HR. ALL TO HAVE 150 MM BEARINGS.

WALLS:–

MATCHING FACING BRICKWORK 112mm ALL BONDED TO THE EXISTING.
50 CAVITY. 100 THERMOLITE BLOCK WORK INNER LEAF BONDED TO EXISTING
ALTERNATIVE COURSES DOUBLE WALL TIES AT REVEALS
VERTICAL DPC:– USE ASTOS PDC
12.7 PLASTER AND SKIM TO INTERNAL WALLS & SET FOR 1/2 HR F/R
INSULATION:– USE 50mm ROCKWOOL RIGID CAVITY BATS OR EQUIVALENT
TO ACHIEVE 'U' 0.45W/M SQ K
HORIZONTAL WALL TIES 915mm. VERTICAL 450mm SPACINGS.
CAVITY TRAY FITTED WHERE PROPOSED EXTENTION MEET EXISTING HOUSE WALLS.
ALL OPENINGS TO BE FITTED WITH THERMOBATE CAVITY CLOSERS

INTERNAL WALLS TO BE 100 THERMOLITE BLOCKWORK
BOTH SIDES. GYPSUM PLASTERED AND SET FOR 1/2HR F/R

GN. FLOOR:–

NEW FLOOR IN PROPOSED ROOM SHOULD BE BUILT UP TO COINCIDE WITH EXISTING
IN KITCHEN AND SHOULD BE 65 MIN. SCREED ON 100 CONC.
ON 100 HARDCORE, WITH BLINDING FOR D.P.M. PROTECTION
D.P.M. TO BE 1200 GUAGE POLYTHENE SHEET.
D.P.M. & D.P.C. TO BE TO BE JOINED TOGETHER TO PROVIDE A CONTINIOUS SEAL.

INSULATION TO FLOOR:– TO BE 50mm RIGID EXPANDED POLYSTYRENE FLOOR
USE STYROFOAM FLOOR MATE (OR EQUIVALENT).
PLEASE NOTE:– GARAGE FLOOR TO BE 150 BELOW MAIN FLOOR.

PROPOSED FRONT & REAR WINDOWS TO MATCH
EXISTING AND TO BE DOUBLE GLAZED UNITS
WITH BACKGROUND VENTILATION INCORPORATED
TOTAL FREE AREA OF 8000 sq/mm

MARKED BRITISH STANDARD 6206 SAFETY GLASS TO BE USED AS SPECIFIED:–
TO THE NEW PATIO DOORS AND ALL NEW GLAZED DOORS UP TO A MIN. HT. OF 1.5M.
(TO BE HARDENED AND TOUGHTENED GLASS AND BE LAMINATED AT BOTTOM HALF).

MECHANICAL EXTRACTOR FANS TO BE FITTED TO KITCHEN BATHROOM &WC.
WITH A CAPACITY OF 60 L/S OR A COOKER HOOD TO KITCHEN
& CAPACITY OF 15 L/S FOR BATHROOM & WC.

SELF CONTAINED SMOKE ALARM TO BE FITTED TO THE HALL WAY & DINING AREA.

NOTES:

FLAT ROOF CONSTRUCTION TO BE 3 LAYERS OF
AMSTRONG ROOFING FELT. BOTTOM LAYERS GLASS FIBRE BASED
13MM MINERAL CHIPPINGS. HOT BITUMEN BONDED TO TOP
LAYER ON 19MM BOARD (MARINE PLY) ON
50 X 50 BATTENS FITTED ACROSS JOISTS (TO FACILITATE
AND ACHIEVE CROSS VENTILATION ON TWO OPPOSITE SIDES).
200 X 50 JOISTS. ALL SPACED AT 400 CTRS ON 100 X 50
WALL PLATE. SUPPORT ON JOIST HANGERS AT JUNCTION
WITH HOUSE WALL. 30 X 5MM MILD STEEL ANCHORS
TO BE USED AS LATERAL SUPPORT FOR ANCHORING
THE ROOF JOISTS TO THE WALLS RUNNING PARALLEL
TO THEM. 1.5M CNTRS.
150MM FIBRE GLASS INSULTATION OR EQUIVALENT
BETWEEN JOISTS.
SLOPED AT 1:40 APPROX WITH LOOSE PEBBLES 13MM
MINIMUM DEPTH (HOT BEDDED).
FELT TO BE CONTINUED UP AND CHASED INTO
EXISTING WALL THEN SECURED AND BONDED WITH
MINIMUM 150MM UPSTANDING.
CAVITY TRAYS ALSO TO BE FITTED.
25MM AIR GAP AT FACIA, FOR SUFFIT VENTILATION OF ROOF VOID.
VENTILATION TO BE AROUND PERIMETER (ON ALL SIDES).
(FITTED WITH PLASTIC GRILLE).

NOTE:– WHERE FLUE OUTLET FROM GAS BOILER IS LESS THAN
300mm TO SUFFIT VENT, A SUFFIT VENT GUARD MUST BE FITTED
LOCAL AND CENTRAL TO FLUE OUTLET
(ALUMINIUM PLATE 600mm LG. x 3mm THK)

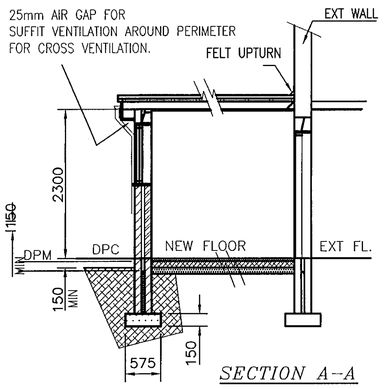


SECTION A–A

NEW DRAINS

NEW DRAINS TO BE DIA 100 SURROUNDED IN PEA SHINGLE
AND BRIDGED WHERE PASSING THROUGH WALLS WITH
SPANLITE LINTOLS ON 150 BEARING
SLOPE:– TO BE 1:40 APPROX.

RAIN WATER DISPOSAL:–

REPLACE EXISTING RAIN WATER PIPES FROM GUTTERING AT REAR
DIVERT AND RECONNECT TO NEW ø100 S.W.D.

ALL NEW TO BE 100 DIA. HALF ROUND RAINWATER GOODS
63 DIA. DOWNPIPE (UPVC) CONNECT TO EXISTING DOWNPIPES
& S.W.D. OR 5M SOAKAWAY FROM NEAREST BUILDING

FOUNDATION:–

TO BE AT 1 METRE MIN DEPTH OR TAKEN DOWN
TO A SUITABLE STRATA. TO SUIT SUB–SOIL CONDITIONS
AND BONDED TO EXISTING.
CONC. MIX 50 kg CEMENT TO NOT MORE THAT 0.1 CU/M
FINE AGG. AND 0.2 CU/M COARSE AGG.
FOUNDATION MUST BE ESCAVATED BELOW INVERT LEVEL
OF DRAINS TO SUIT L/A. APPROVAL IF APPLICABLE.
EXISTING FOUNDATION TO BE EXPOSED TO CHECK ADEQUACY
(L/A APPROVAL)
CONNECT NEW CLAY PIPE TO ALL EXISTING
AIR BRICKS IN EXISTING WALL TO MAINTAIN VENTILATION.
SECURE IN NEW FLOOR AND FIT GRILL AT OUTER BNDS.

APPROVED

APPROVED

*NOTE:– NO PART OF THE PROPOSED SHOULD OVERLAP OR ENCROACH ON ANY PART OF THE ADJOINING PROPERTIES.*
*ALL WORK MUST BE CONTAINED WITHIN THE SITE, UNLESS PRIOR AGREEMENT.*
*NO RESPONSIBILITY WILL BE ACCEPTED FOR ANY BUILDING WORK OR WORKMANSHIP.*
*ALL DIMENSIONS TO BE CHECKED ON SITE BY THE BUILDERS AND AGREED WITH THE L.A. IF IN DOUBT ASK.*
*ALL EXISTING PUBLIC DRAINS PASSING WITHIN 3.5 METRES OF THE PROPOSED EXTENSION*
*MAY REQUIRE A C.C.T.V. INSPECTION BEFORE AND AFTER WORK COMMENCE. L.A. APPROVAL MUST BE SOUGHT.*
*BUILDERS ARE INSTRUCTED NOT OT COMMENCE WORK UNLESS ALL STATUTARY PERMISSION ARE GAINED.*

© Copyright TEKNIDRAFT DESIGNS SERVICES. 199_

NOTE: THIS DRAWING IS NOT TO BE COPIED WITHOUT PERMISSION FROM TEKNIDRAFT DESIGNS SERVICES.

ELEVATION SCALE 1:100

FLOOR PLAN & SECTION SCALE 1:50

| | | | |
|---|---|---|---|
| | | MATERIAL: | TOLERANCES UNLESS STATED OTHERWISE |
| APPROVED | DATE | SPECIFICATION: | |
| CHECKED | DATE | FINISH: | LIMITS APPLY AFTER PLATING |
| DRAWN DC BROWNE | DATE 07.03.2000 | | |

DIMENSIONS IN MM OR INCHES
ORIGINAL SCALE: 1:50 & 1:100
COMPUTER FILE NAME _____.DWG

**TEKNIDRAFT DESIGNS**
ARCHITECTURAL SERVICES. READING BERKS UK. (TEL. PH. 0118 377 85 49

TITLE: SEE DRAWING

DRG. No. HARPER–001
SERVICE DRG. No. A 1

17/6/00.

DRG. No.

THIRD ANGLE PROJECTION

DO NOT SCALE DRAWING – THIS BAR FOR GUIDANCE ONLY
0 10 20 30 40 50 60 70 80 90 100

FOR EXPLANATION OF DIMENSIONS, TOLERANCES, NOTES, ETC. SEE BS 308.
REMOVE ALL BURRS AND SHARP EDGES UNLESS STATED OTHERWISE

CONTRACT REF.

FELT UPTURN

| ISSUE & CHNG No. |
|---|
| ISS 1. 07.03.2000 |
| ISS 2. (1) 28.03.2000 FLAT ROOF VENT FITTED |
| ISS 3. 16.06.2003 FLLOR AREA REDUCED |

# PROPOSED SIDE EXTENSION TO PROVIDE NEW GARAGE & STUDY

## FOR MR S HARPER AT 79 CHILTERN CRESCENT READING BERKS RG6 1AL.

Minor Amendment Acceptable

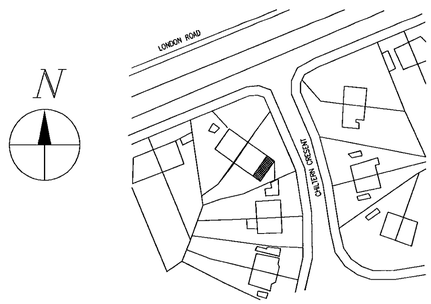


SITE PLAN
SCALE– 1:1250

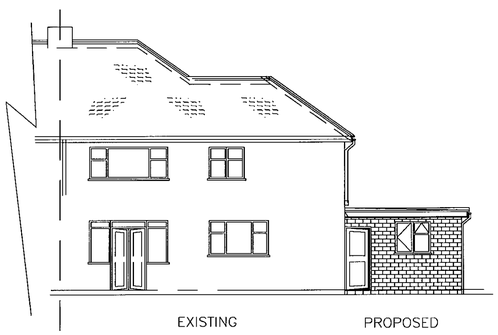


REAR ELEVATION




R. ELEVATION




FRONT ELEVATION

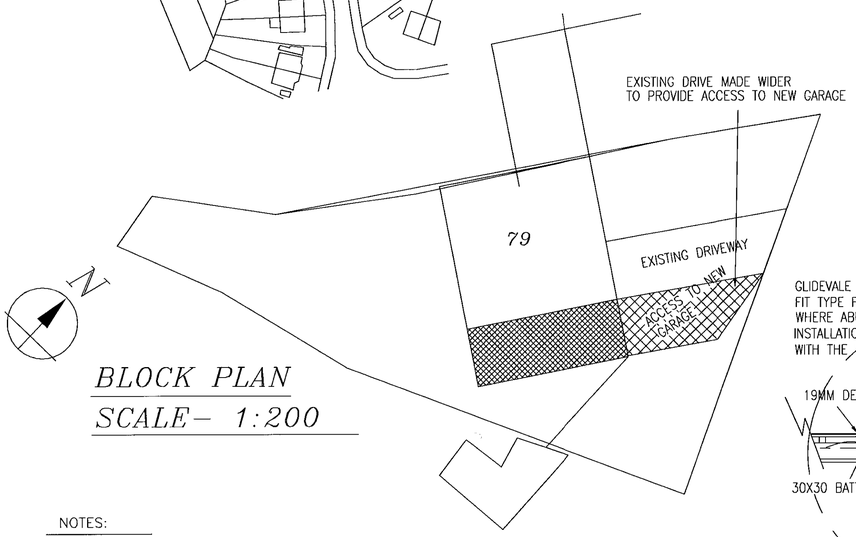


BLOCK PLAN
SCALE– 1:200

NOTES:

FLAT ROOF CONSTRUCTION TO BE 3 LAYERS OF AMSTRONG ROOFING FELT. BOTTOM LAYERS GLASS FIBRE BASED 13MM MINERAL CHIPPINGS. HOT BITUMEN BONDED TO TOP LAYER ON 19MM BOARD (MARINE PLY) ON 50 X 50 BATTENS FITTED ACROSS JOISTS (TO FACILITATE AND ACHIEVE CROSS VENTILATION ON TWO OPPOSITE SIDES).

(1) GLIDEVALE FLAT ROOF SPACE VENTILATOR MUST ALSO BE USED WHERE ABUTTING THE MAIN WALL, TO PROVIDE 25MM AIRFLOW FIT IN ACCORDANCE WITH MANUFACTURERS INSTRUCTIONS

200 X 50 JOISTS. ALL SPACED AT 400 CTRS ON 100 X 50 WALL PLATE. SUPPORT ON JOIST HANGERS AT JUNCTION WITH HOUSE WALL. 30 X 5MM MILD STEEL ANCHORS TO BE USED AS LATERAL SUPPORT FOR ANCHORING THE ROOF JOISTS TO THE WALLS RUNNING PARALLEL TO THEM. 1.5M CNTRS.

120MM CELLOTEX INSULTATION OR EQUIVALENT BETWEEN JOISTS.

SLOPED AT 1:40 APPROX WITH LOOSE PEBBLES 13MM MINIMUM DEPTH (HOT BEDDED).

FELT TO BE CONTINUED UP AND CHASED INTO EXISTING WALL THEN SECURED AND BONDED WITH MINIMUM 150MM UPSTANDING.

CAVITY TRAYS ALSO TO BE FITTED.

25MM AIR GAP AT FACIA, FOR SUFFIT VENTILATION OF ROOF VOID. VENTILATION TO BE AROUND PERIMETER (ON ALL SIDES). (FITTED WITH PLASTIC GRILLE).

NOTE:– WHERE FLUE OUTLET FROM GAS BOILER IS LESS THAN 300mm TO SUFFIT VENT, A SUFFIT VENT GUARD MUST BE FITTED LOCAL AND CENTRAL TO FLUE OUTLET (ALUMINIUM PLATE 600mm LG. x 3mm THK)

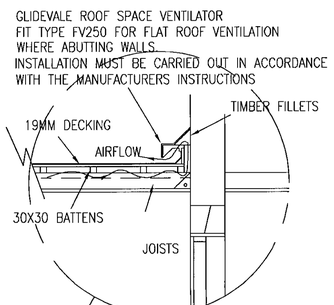


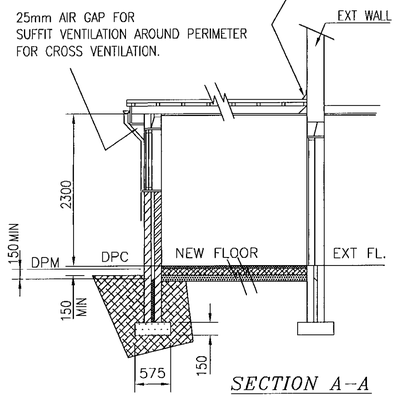


SECTION A–A

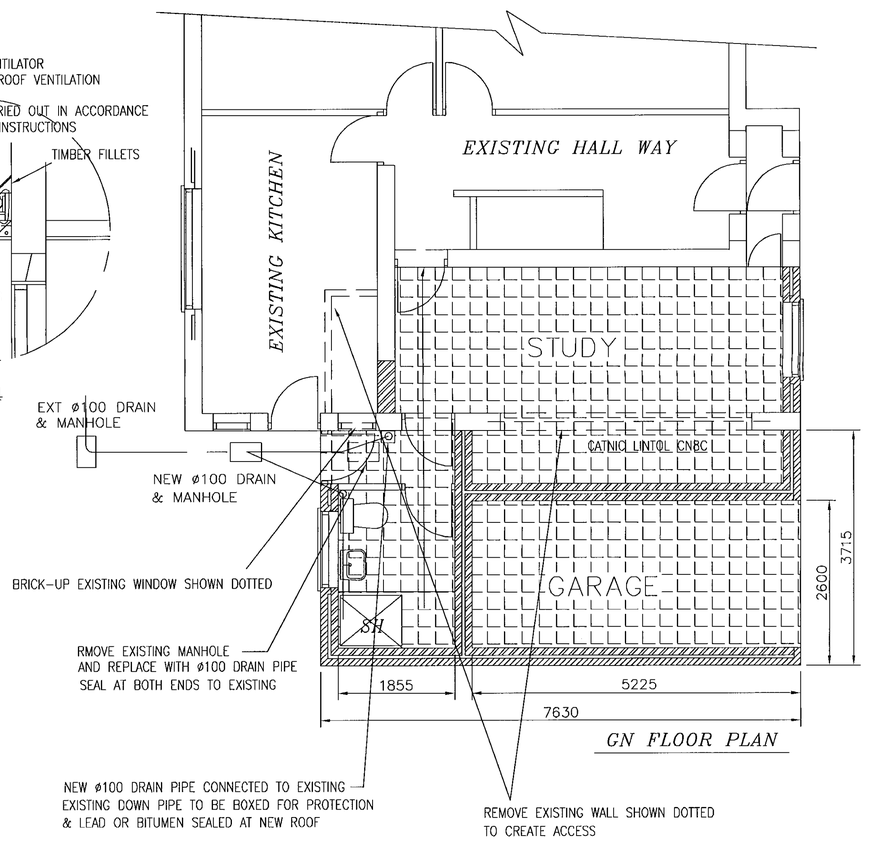


GN FLOOR PLAN

PROPOSAL:–

CONSTRUCT PROPOSED NEW STUDY AND GARAGE EXTENSION AT SIDE.
CREATE NEW OPENING FOR ACCESS. FIT LINTOL SUPPORT
MAKE GOOD ALL WALLS WHERE NECESSARY
FIT NEW FELT ROOF TO NEW EXTENSION.
NEW FLOOR TO COINCIDE WITH EXISTING
REMOVE EXISTING OUT BUILDING & W.C.
CAP OFF EXISTING DRAIN TO OLD W.C. RUN.
REMOVE MANHOLE COVER AND FIT NEW SCREWED DOWN
AIR–TIGHT AND WATER–TIGHT COVER TO EXISTING MANHOLES
WHERE SITED IN NEW FLOOR.

LINTELS:–

TO BE CATNIC MEMBERS CN7, CN6X & CN8B WITH INTERNAL INSULATION FITTED AND TO BE USED AS SPECIFIED BY THE MANUFACTURERS.
FIT TO ALL NEW DOORS AND WINDOW OPENINGS.
TO CLAD:– USE 1,6 MM WIRE BINDINGS WITH 100 MM PITCH.
RENDERED WITH 13 MM SAND AND CEMENT WITH 5 MM GYPSUM PLASTER AND SET FOR 1/2 HR. ALL TO HAVE 150 MM BEARINGS.

WALLS:–

MATCHINC FACING BRICKWORK 112mm ALL BONDED TO THE EXISTING.
65 CAVITY. 100 THERMOLITE BLOCK WORK INNER LEAF BONDED TO EXISTING
ALTERNATIVE COURSES DOUBLE WALL TIES AT REVEALS
VERTICAL DPC:– USE ASTOS PDC
12.7 PLASTER AND SKIM TO INTERNAL WALLS & SET FOR 1/2 HR F/R
INSULATION:– USE 65m ROCKWOOL RIGID CAVITY BATS OR EQUIVALENT TO ACHIEVE 'U' 0.3W/M SQ K
HORIZONTAL WALL TIES 915mm. VERTICAL 450mm SPACINGS.
CAVITY TRAY FITTED WHERE PROPOSED EXTENTION MEET EXISTING HOUSE WALLS.
ALL OPENINGS TO BE FITTED WITH THERMOBATE CAVITY CLOSERS

INTERNAL WALLS TO BE 100 THERMOLITE BLOCKWORK
BOTH SIDES. GYPSUM PLASTERED AND SET FOR 1/2HR F/R

GN. FLOOR:–

NEW FLOOR IN PROPOSED ROOM SHOULD BE BUILT UP TO COINCIDE WITH EXISTING IN KITCHEN AND SHOULD BE 65 MIN. SCREED ON 100 CONC.
ON 100 HARDCORE, WITH BLINDING FOR D.P.M. PROTECTION
D.P.M. TO BE 1200 GUAGE POLYTHENE SHEET.
D.P.M. & D.P.C. TO BE TO BE JOINED TOGETHER TO PROVIDE A CONTINIOUS SEAL.

INSULATION TO FLOOR:– TO BE 60mm CELOTEX AS R INSULATION TO FLOOR OR STYROFOAM FLOOR MATE (OR EQUIVALENT) MIN U VALUE 0.25W/M SQ/K
INSULATION TO HAVE 40MM UPSTAND TO FLOOR
REINFORCED SCREED WITH CHICKEN WIRE IF PLACED ABOVE INSULATION
EXISTING OVERSITE CONCRETE TO EXISTING GARAGE TO BE FINISHED WITH 3 COATS OF SYNTHAPROOF TO UPPER SURFACES
AND 175 MM UP THE WALLS
FIT INSULATION 60 MM CELOTEX AND 65 MM SCREED

PLEASE NOTE:– NEW GARAGE FLOOR TO BE 150 BELOW MAIN FLOOR.

PROPOSED FRONT & REAR WINDOWS TO MATCH EXISTING AND TO BE DOUBLE GLAZED UNITS
WITH BACKGROUND VENTILATION INCORPORATED
TOTAL FREE AREA OF 8000 sq/mm

MARKED BRITISH STANDARD 6206 SAFETY GLASS TO BE USED AS SPECIFIED:–
TO THE NEW PATIO DOORS AND ALL NEW GLAZED DOORS UP TO A MIN. HT. OF 1.5M.
(TO BE HARDENED AND TOUGHTENED GLASS AND BE LAMINATED AT BOTTOM HALF).

MECHANICAL EXTRACTOR FANS TO BE FITTED TO KITCHEN BATHROOM &WC.
WITH A CAPACITY OF 60 L/S OR A COOKER HOOD TO KITCHEN
& CAPACITY OF 15 L/S FOR BATHROOM & WC.

SELF CONTAINED SMOKE ALARM TO BE FITTED TO THE HALL WAY & DINING AREA.

RAIN WATER DISPOSAL:–

REPLACE EXISTING RAIN WATER PIPES FROM GUTTERING AT REAR DIVERT AND RECONNECT TO NEW ø100 S.W.D.

ALL NEW TO BE 100 DIA. HALF ROUND RAINWATER GOODS 63 DIA. DOWNPIPE (UPVC) CONNECT TO EXISTING DOWNPIPES & S.W.D. OR 5M SOAKAWAY FROM NEAREST BUILDING

FOUNDATION:–

TO BE AT 1 METRE MIN DEPTH OR TAKEN DOWN TO A SUITABLE STRATA. TO SUIT SUB–SOIL CONDITIONS AND BONDED TO EXISTING.
CONC. MIX 50 kg CEMENT TO NOT MORE THAT 0.1 CU/M FINE AGG. AND 0.2 CU/M COARSE AGG.
FOUNDATION MUST BE ESCAVATED BELOW INVERT LEVEL OF DRAINS TO SUIT L/A. APPROVAL IF APPLICABLE.
EXISTING FOUNDATION TO BE EXPOSED TO CHECK ADEQUACY (L/A APPROVAL)
CONNECT NEW CLAY PIPE TO ALL EXISTING
AIR BRICKS IN EXISTING WALL TO MAINTAIN VENTILATION.
SECURE IN NEW FLOOR AND FIT GRILL AT OUTER BNDS.

WASTE CONNECTION

INSTALLATION OF NEW BATH, WC & WASH BASIN.
UPVC PIPES. ø32 WITH 76 SEALED 'P' TRAP TO WASH BASIN & SHOWER
~~ø40 TO BATH TO CONN~~ECT INTO ø50 COMMON WASTE PIPE.
ø100 WITH 76 SEALED 'P' TRAP TO WC. ALL TO CONNECT TO
ø100 STUB STACK FITTED WITH DURGO VALVE ON TOP & CONNECT TO
ø100 NEW DRAIN TO INSPECTION CHAMBER
FOR NEW INSPECTION CHAMBER (WHERE REQUIRED) USE:
OSMA D/S INSPECTION CHAMBER ø300 WITH EXTENDER SHAFTS AND COVER. SITED IN MOST CONVENIENT POS'N TO SUIT EXISTING DRAINS
NEW DRAINS TO BE SURROUNDED IN PEA SHINGLE AND BRIDGED WHERE PASSING THROUGH WALLS WITH SPANLITE LINTOLS ON 150 BEARING
SLOPE:– TO BE 1:40 APPROX.

NOTE:– NO PART OF THE PROPOSED SHOULD OVERLAP OR ENCROACH ON ANY PART OF THE ADJOINING PROPERTIES. ALL WORK MUST BE CONTAINED WITHIN THE SITE, UNLESS PRIOR AGREEMENT. NO RESPONSIBILITY WILL BE ACCEPTED FOR ANY BUILDING WORK OR WORKMANSHIP. ALL DIMENSIONS TO BE CHECKED ON SITE BY THE BUILDERS AND AGREED WITH THE L.A. IF IN DOUBT ASK. ALL EXISTING PUBLIC DRAINS,PASSING WITHIN 3.5 METRES OF THE PROPOSED EXTENSION MAY REQUIRE A C.C.T.V. INSPECTION BEFORE AND AFTER WORK COMMENCE. L.A. APPROVAL MUST BE SOUGHT. BUILDERS ARE INSTRUCTED NOT OT COMMENCE WORK UNLESS ALL STATUTARY PERMISSION ARE GAINED.

© Copyright TEKNIDRAFT DESIGNS SERVICES. 199_

ELEVATION SCALE 1:100

FLOOR PLAN & SECTION SCALE 1:50

| | | | |
|---|---|---|---|
| | | MATERIAL: | TOLERANCES UNLESS STATED OTHERWISE |
| APPROVED | DATE | SPECIFICATION: | |
| CHECKED | DATE | FINISH: | |
| DRAWN DC BROWNE | DATE 07.03.2000 | | LIMITS APPLY AFTER PLATING |

DIMENSIONS IN MM OR INCHES
ORIGINAL SCALE: 1:50 & 1:100
COMPUTER FILE NAME _____.DWG

TEKNIDRAFT DESIGNS
ARCHITECTURAL SERVICES. READING BERKS UK. (TEL. PH. 0118 377 85 49

TITLE: SEE DRAWING

DRG. No. HARPER–001

SERVICE DRG. No. A 1

NOTE: THIS DRAWING IS NOT TO BE COPIED WITHOUT PERMISSION FROM TEKNIDRAFT DESIGNS SERVICES.

TDS

0 10 20 30 40 50 60 70 80 90 100

9/12/03

APPROVED

TO ACHIEVE 4 CAR PARKING SPACES
2 CARS PARKING ON THE EXISTING DRIVE
1 CAR PARKING ON THE NEW DRIVEWAY
1 CAR PARKING IN THE GARAGE.

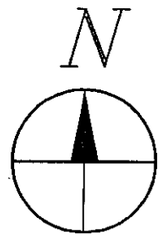


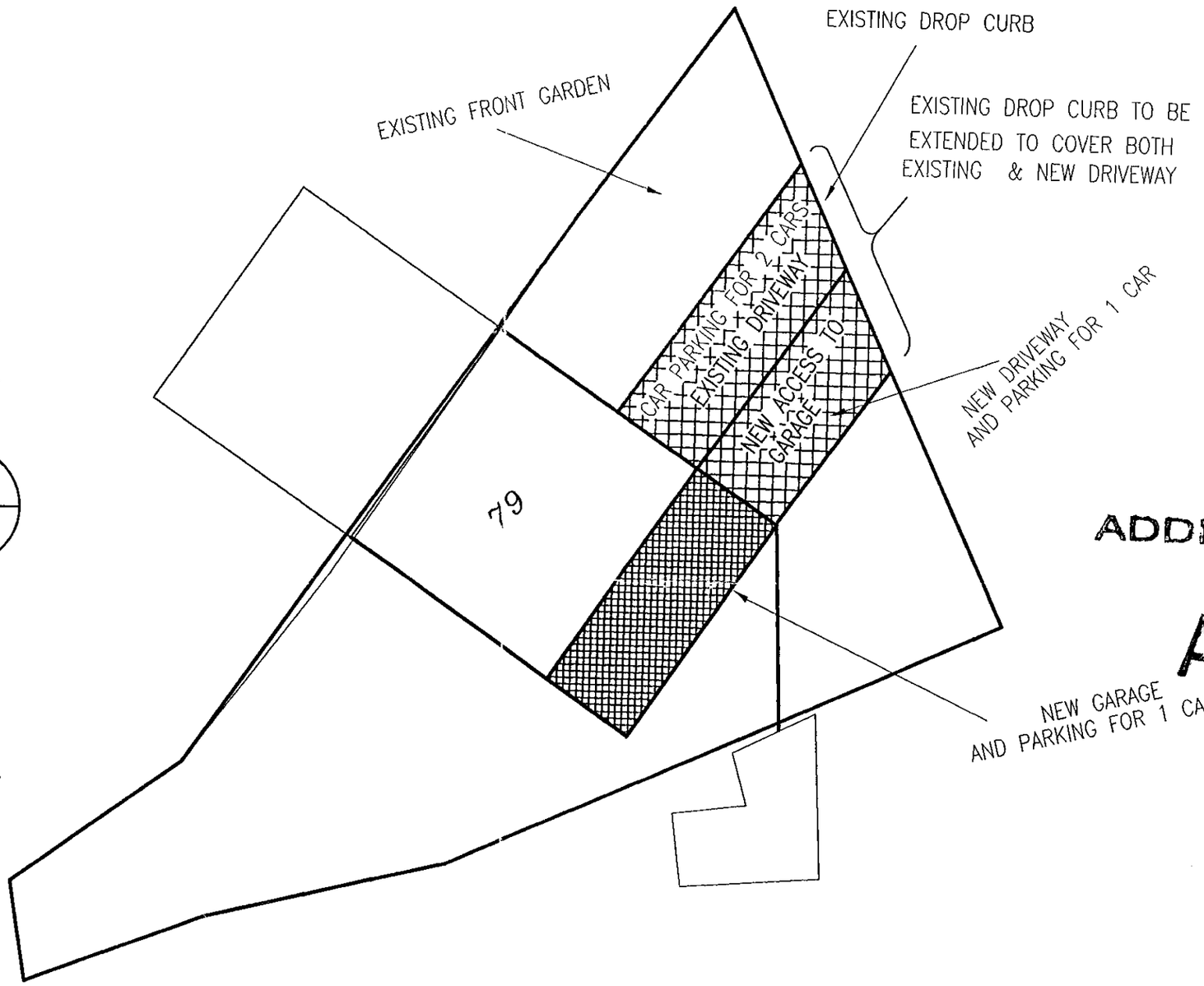


1114

ADDITIONAL PLAN

APPROVED

*BLOCK PLAN*
*SCALE– 1:200*

*FRONT AREA OF GARDEN TO BE PREPEARED TO PROVIDE HARD STANDING AREA FOR 3 CARS*

*BLOCK PLAN TO SHOW HARD STANDING AREA FOR 3 CARS*
*FOR MR S HARPER AT 79 CHILTERN CRESCENT READING BERKS RGXX XXX.*

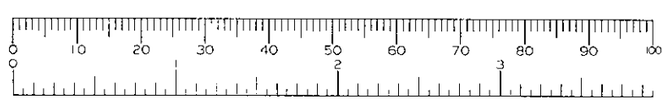


SD 12/6/00

SUPERSEDED

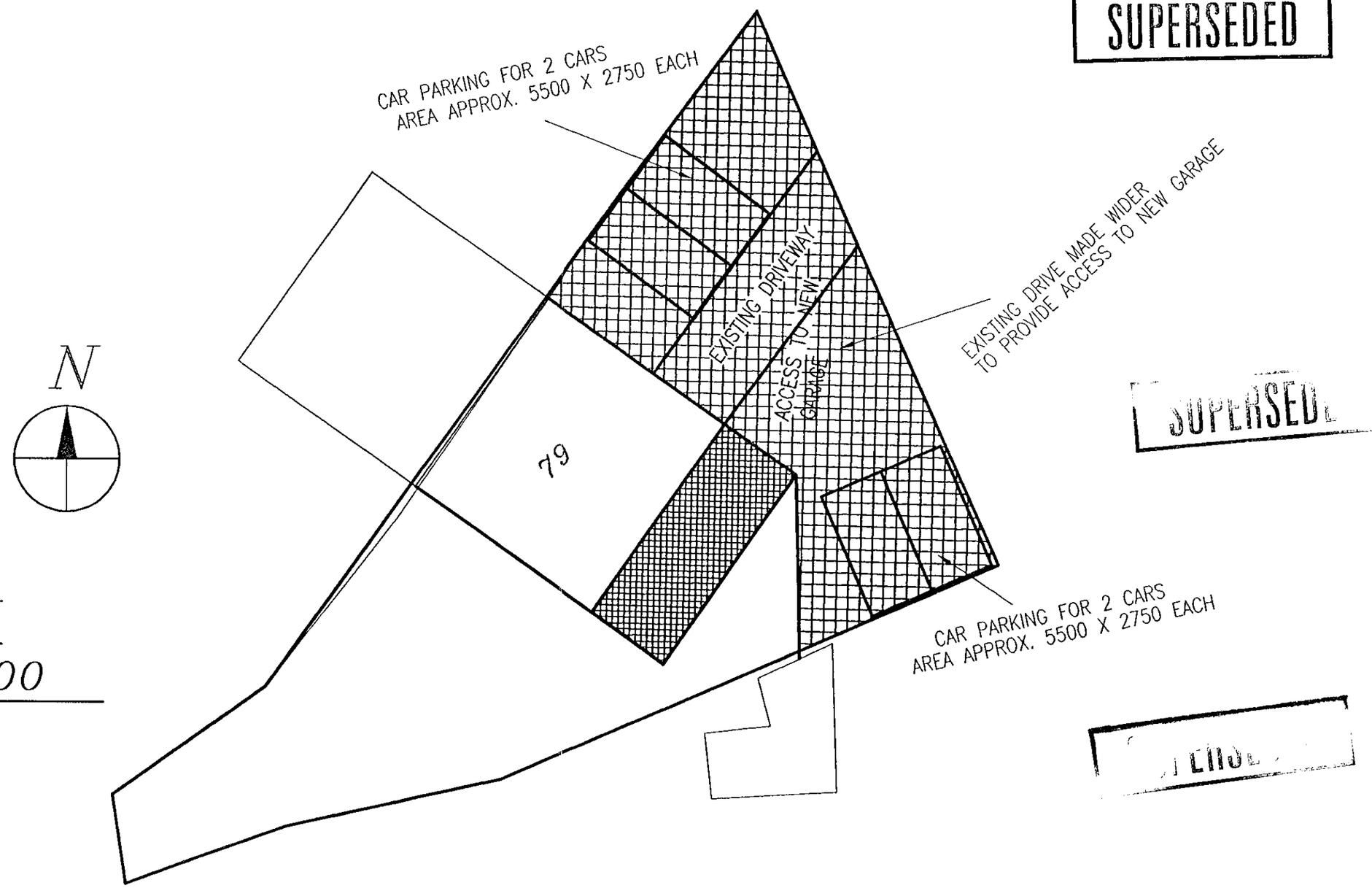


SUPERSED

N

*BLOCK PLAN*

*SCALE– 1:200*

*FRONT AREA OF GARDEN TO BE PREPEARED TO PROVIDE HARD STANDING AREA FOR 4 CARS*

*BLOCK PLAN TO SHOW HARD STANDING AREA FOR 4 CARS*

*FOR MR S HARPER AT 79 CHILTERN CRESCENT READING BERKS RGXX XXX.*

TO ACHIEVE 4 CAR PARKING SPACES
2 CARS PARKING ON THE EXISTING DRIVE
1 CAR PARKING ON THE NEW DRIVEWAY
1 CAR PARKING IN THE GARAGE.

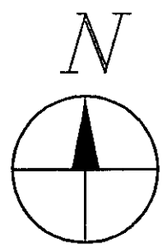


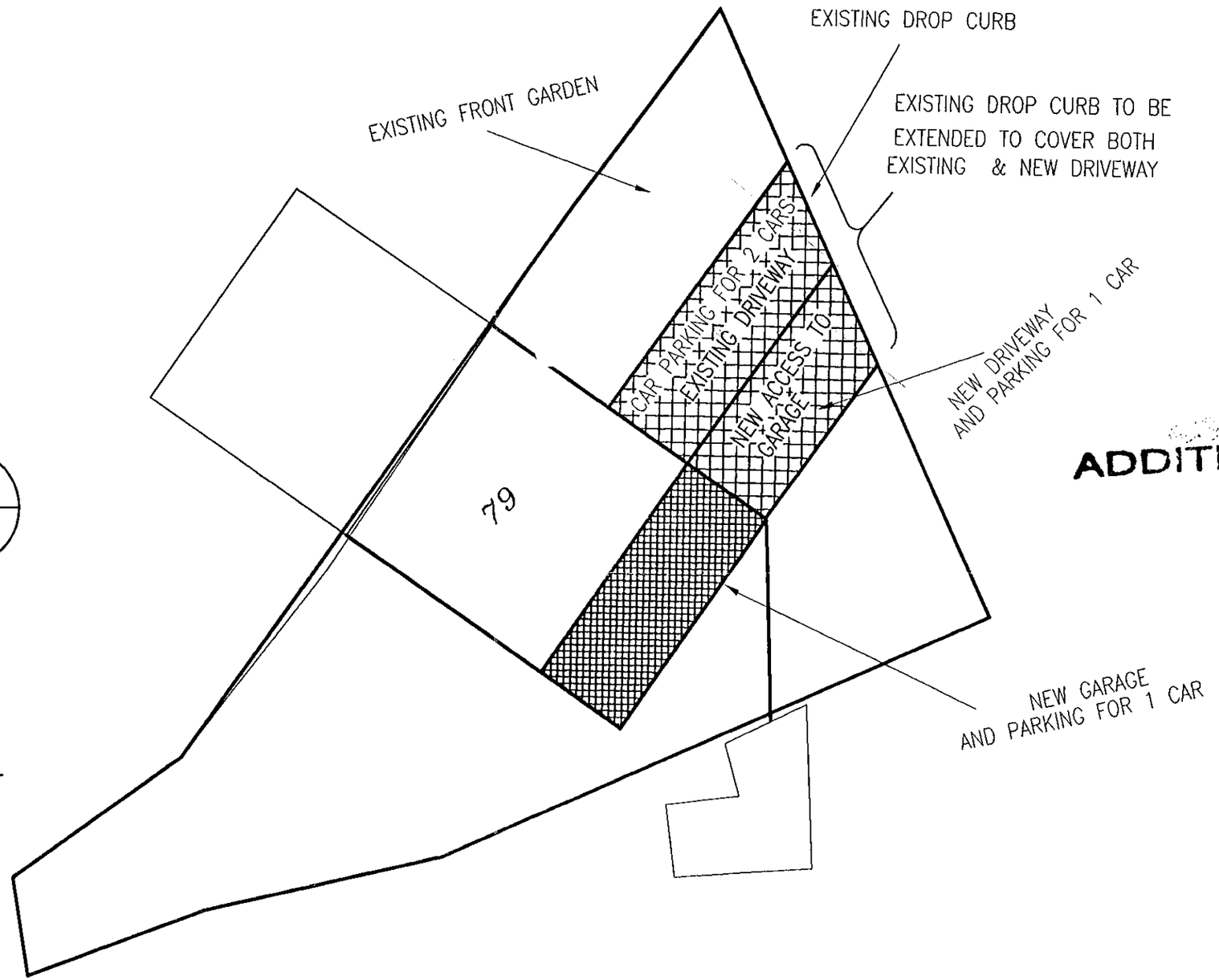


1114

ADDITIONAL PLAN

*BLOCK PLAN*
*SCALE– 1:200*

*FRONT AREA OF GARDEN TO BE PREPEARED TO PROVIDE HARD STANDING AREA FOR 3 CARS*

*BLOCK PLAN TO SHOW HARD STANDING AREA FOR 3 CARS*

*FOR MR S HARPER AT 79 CHILTERN CRESCENT READING BERKS RGXX XXX.*