GHA Trees
5 South Drive
High Wycombe
Bucks
HP13 6JU

Glen Harding MICFor
MSc (Forestry), MArborA
t: 07884 056025
e: info@ghatrees.co.uk
www.ghatrees.co.uk

BS5837:2012 TREE SURVEY AND ARBORICULTURAL IMPACT ASSESSMENT: 89A Ellis Road, Crowthorne, Berks, RG45 6PJ

Dated: 30th July 2026

Our reference: GHA/DS/129560:26

Arboricultural ASSOCIATION Professional Member

Institute of Chartered Foresters Registered Consultant

CONTENTS

Section	Subject	Page
	Instructions	3
	Executive Summary	3
	Documents Supplied	4
	Scope of Survey	4
	Survey Method	5
	The Site	6
	Subject Trees	6
	The Proposal	6
	Arboricultural Impact Assessment	6
	Post Development Pressure	7
	Tree Protection Measures and Preliminary Method Statement for Development Works	8
	Conclusion	8
	Recommendations	9
Appendix A	Site Plan / Arboricultural Impact Plan (Attached as a separate PDF file to maintain its integrity / accuracy)	
Appendix B	Tree Table	
Appendix C	Extract from BS5837:2012 – Protective Fencing	

Arboricultural Impact Assessment

Location: 89A Ellis Road, Crowthorne, Berks, RG45 6PJ
Our reference: GHA/DS/129560:26
Dated: 30th July 2026
Prepared by: Glen Harding MICFor, MSc (Forestry), MArborA
Date of Inspection: 24th July 2026

Instructions

TERMS OF REFERENCE – GHA Trees were instructed to survey the subject trees within and adjacent to 89A Ellis Road, Crowthorne, Berks, in order to assess their general condition and to provide a planning integration statement for the indicative proposed development that safeguards the long term wellbeing of the retained trees in a sustainable manner.

The writer retains the copyright of this report and it content is for the sole use of the client(s) named above. Copying of this document may only be undertaken in connection with the above instruction. Reproduction of the whole, or any part of the document without written consent from GHA Trees is forbidden. Tree work contractors, for the purpose of tendering only, may reproduce the Schedule for tree works included in the appendices.

Executive Summary

The proposal for the site is to renovate the existing house, work that will include some infill ground floor extensions and upper-level extensions. The proposed scheme does not require the removal of any trees; therefore, the landscape character of the site will be unaffected by the proposal. The retained trees require protection in accordance with industry best practice and BS 5837: 2012 – Trees in relation to design, demolition and construction – recommendations, in order to ensure their longevity.

Documents Supplied

The client supplied the following documents:

- Existing layout plans
- Proposed layout plans

Scope of Survey

1.1 The survey is concerned with the arboricultural aspects of the site only.

1.2 This is **not** a full tree safety survey and should not be viewed or used as such.

1.3 The planning status of the subject property was not investigated in detail.

1.4 A qualified Arboriculturist undertook the report and site visit and the contents of this report are based on this. Whilst reference may be made to built structure or soils, these are only opinions and confirmation should be obtained from a qualified expert as required.

1.5 Trees in third party ownership were surveyed from within the subject property, therefore a detailed assessment was not possible and some (if not all) measurements were estimated. Where the stem location of a third party tree has been estimated, this is noted on the plan.

1.6 Dense vegetation or climbers (such as ivy) also prohibited full inspections for some trees; this is noted where applicable.

1.7 No discussions took place between the surveyor and any other party.

1.8 The trees were inspected on the basis of the Visual Tree Assessment method expounded by Mattheck and Breleor (The body language of tree, DoE booklet Research for Amenity Trees No. 4, 1994)

1.9 The survey was undertaken in accord with British Standard 5837: 2012 – Trees in relation to design, demolition and construction – recommendations.

1.10 The client's attention is drawn to the responsibilities under the Wildlife and Countryside Act (1981).

Survey Method

2.1 The survey was conducted from ground level with the aid of binoculars if needed.

2.2 No tissue samples were taken nor was any internal investigation of the subject trees undertaken.

2.3 No soil samples were taken.

2.4 The height of each subject tree was estimated using a clinometer and recorded to the nearest half metre.

2.5 The stem diameter for each tree was measured in line with the requirements set out in BS 5837: 2012 – Trees in relation to design, demolition and construction – recommendations.

2.6 The crown spreads were measured with an electronic distometer and recorded to the nearest half metre. Where the crown radius was notably different in any direction this has been noted on the Plan (appendix A) and within the tree table (Appendix B). The crowns of those trees that are proposed for removal, or trees where the crown spread is deemed insignificant in relation to the proposed development are not always shown on the appended plan; however their stem locations are marked for reference.

2.7 The Root Protection Area (RPA) for each tree is included in the tree table, both as an area, and as the radius of a circle.

2.8 The crown clearance was measured using a clinometer and recorded to the nearest half metre. Where it is significantly lower in one direction, this is noted within the tree table at appendix B.

2.9 All of the trees that were inspected during the site visit are detailed on the plan at Appendix A; this plan was produced in colour and **MUST** only be scanned or reproduced in colour. The trees on this plan are categorised and shown in the following format:

COLOUR CODING AND RATING OF TREES:

Category A – Trees of high quality with an estimated remaining life expectancy of at least 40 years. Colour = light green crown outline on plan.

Category B – Trees of moderate quality with an estimated remaining life expectancy of at least 20 years. Colour = mid blue crown outline on plan.

Category C – Trees of low quality with an estimated remaining life expectancy of at least 10 to 20 years, or young trees with a stem diameter below 150mm. Colour = uncoloured crown outline on plan.

Category U – Those in such a condition that they cannot realistically be retained as living trees in the context of the current land use for longer than 10 years. Colour = red crown outline on plan.

All references to tree rating are made in accordance with BS 5837: 2012 – Trees in relation to design, demolition and construction – recommendations', Table 1.

The Site

3.1 The site is located on Ellis Road, a residential through road located to the north of Crowthorne.

3.2 A good tree cover is present on the site itself as well as adjacent sites, with many semi-mature and mature trees of both native and exotic origin characterising the local area.

3.3 Access to the property is currently gained via a driveway to the front of the site.

The Subject Trees

4.1 The details of the subject trees are set out in the Schedule at Appendix B.

The Proposal

5.1 The proposal for the site is to renovate the existing house, work that will include some infill ground floor extensions and upper-level extensions.

5.2 The proposed location of the above structures can be seen on the appended plan.

Arboricultural Impact Assessment

TREE RETENTION:

6.1 The proposed site layout and all of its associated structures allows for the healthy retention of all of the trees on the site itself, and within nearby adjacent sites; therefore, the arboricultural landscape character of the site will be retained.

TREE PRUNING TO ACCOMODATE THE PROPOSAL OR ACCESS TO THE SITE

6.2 The implementation of the proposal does not lead to the requirement to prune any of the retained trees.

6.3 There is no part of the new structure which will have tree canopies (from trees to be retained) overhanging it and the building works can progress safely without the need for any facilitation pruning.

ASSESSMENT OF RETAINED TREES ROOT PROTECTION AREAS

6.4 Section 4.6.3 of BS 5837: 2012 states that the Root Protection Area (RPA) of each tree should be assessed by an arboriculturalist considering the likely morphology and disposition of the roots, when known to be influenced by past or existing site conditions.

6.5 The assessed RPAs can be seen on the appended plan where some have amended to take account of the existing structures.

ASSESSED IMPACT ON RPAS BY PROPOSED STRUCTURES

6.6 The proposed new structures are situated outside of the assessed RPAs of all of the trees; therefore, these trees pose no below ground constraints on the new structures or vice versa.

ACCESS TO THE DEVELOPMENT

6.7 The existing driveway and parking areas will be retained and there are no plans to upgrade or extend these areas as part of the proposed site works.

INSTALLATION OF SERVICES

6.8 The full details of existing and proposed new services have not been made available at the time of writing.

6.9 From an assessment of the subject site, undertaken in conjunction with the project architect, the existing drainage system has been assessed as suitable for re-use and it is assumed that the electric and gas cabling is also satisfactory. Therefore, there is no reason to assume that any new service installations will be required within the RPAs of any trees.

Post Development Pressure

FUTURE TREE AND STRUCTURE RELATIONSHIPS

7.1 The retained trees are at a satisfactory distance from the proposed new building outline and highly unlikely to give rise to any inconvenience.

7.2 Regular inspections of the retained trees by a suitably qualified Arboriculturalist and subsequent remedial works will ensure that the trees are maintained in a suitable manner, to exist in harmony with the new structures and its occupants for many years to come.

HARD LANDSCAPING

7.3 All new pathways and hard landscaping areas within the Root Protection Areas (RPAs) of the retained trees should be designed using no-dig, up and over construction and in close co-ordination with the retained Arboriculturalist using porous materials.

Tree Protection Measures and Preliminary Method Statement for Development Works

8.1 TREE PROTECTION BARRIERS

It is essential for the future health of the trees to be retained on site, that all development activity is undertaken outside the root protection zone of these trees. The position of the fence **MUST** be marked out with biodegradable marker paint on site and agreed with appropriate representatives from the contractor. The fencing **MUST** be erected **prior** to any works in the vicinity of the trees and removed only when all development activity is complete. The protective fencing **MUST** be as that shown in BS 5837 (see Appendix C). The herras panels **MUST** be joined together using a minimum of two anti-tamper couplers which **MUST** be installed so they can only be removed from the inside of the fence. The panels **MUST** supported by stabilizer struts, which **MUST** be installed on the inside and secured to the ground using pins or appropriate weights.

The Fence must be marked with a clear sign reading:

"Construction Exclusion Zone – No Access"

8.2 SITE HUTS, WELFARE FACILITIES AND STORAGE OF EQUIPMENT, MATERIALS AND CHEMICALS

All site huts **MUST** be positioned outside of the retained trees RPAs.

8.3 MIXING OF CONCRETE

All mixing of cement / concrete **MUST** be undertaken outside of the RPA of all of the retained trees.

8.4 ON SITE SUPERVISION

Regular site supervision is essential to ensure all potentially damaging activities near to trees are properly supervised. A pre start site meeting **MUST** occur to ensure all parties are aware of their responsibilities relating to tree protection on site; this **MUST** include a site induction for key personnel.

8.5 OTHER TREE PROTECTION PRECAUTIONS

- **NO** fires lit on site within 20 metres of any tree to be retained.
- **NO** fuels, oils or substances with will be damaging to the tree shall be spilled or poured on site.
- **NO** storage of any materials within the root protections zone.

8.6 DISMANTLING PROTECTIVE BARRIERS

Protective barriers must only be completely removed when all machinery, and equipment has left site.

Conclusion

9.1 In conclusion, the principal arboricultural features within the site can be retained and adequately protected during development activities.

9.2 Subject to precautionary measures as detailed above, the proposal will not be injurious to trees to be retained.

Recommendations

10.1 Site supervision – An individual e.g. the Site Agent, must be nominated to be responsible for all arboricultural matters on site. This person must:

a. Be present on the site the majority of the time.
b. Be aware of the arboricultural responsibilities.
c. Have the authority to stop any work that is, or has the potential to cause harm to any tree.
d. Be responsible for ensuring that all site personnel are aware of their responsibilities towards trees on site and the consequences of the failure to observe those responsibilities.
e. Make immediate contact with the local authority and / or retained arboriculturalist in the event of any related tree problems occurring whether actual or potential.

10.2 It is recommended, that to ensure a commitment from all parties to the healthy retention of the trees, that details are passed by the architect or agent to any contractors working on site, so that the practical aspects of the above precautions are included in their method statements, and financial provision made for these.

30th July 2026
Signed:

Glen Harding MICFor, MSc (Forestry), MArborA
For and on behalf of GHA Trees

Appendix A
TREE PLAN
(see separate PDF)

Appendix B
TREE TABLE

Tree Number	Tree Name (species)	Ht (m)	Calculated Stem Diameter (mm)	Number of Stems	Root Protection Area (Radius, m)	N (m)	E (m)	S (m)	W (m)	Age Class	Clearance above ground (m)	Height of first branch (m)	Estimated life expectancy	BS Category	Comments / Recommendations
G1	Lawson cypress	16	560	1	6.72	2.5	2.5	2.5	2.5	M	3	3	10-20	C2	Lapsed hedge.
G2	Lawson cypress	10	240	1	2.88	2	2	2	2	M	3	3	10-20	C2	Lapsed hedge.
T3	Oak	26	800	1	9.60	10	11	11	10	M	8	8	40+	A1	No significant / notable defects observed during inspection.
G4	Cherry	6	130	1	1.56	1	1	1	1	M	2	2	10-20	C2	Small trees of limited value in the wider landscape.
T5	Oak	30	860	1	10.32	10	8	6	7	M	4	6	40+	A1	No significant / notable defects observed during inspection.
T6	Oak	28	620	1	7.44	4	8	7	7	M	4	7	40+	A1	No significant / notable defects observed during inspection.
T7	Oak	24	620	1	7.44	2	8	8	1	M	6	6	40+	A1	No significant / notable defects observed during inspection.
T8	Catalpa	9	360	1	4.32	6	5	6	6.5	M	2	2	20-40	B1	No significant / notable defects observed during inspection.
T9	3x Scots pine	24	450	1	5.40	4	2	4	4	M	8 east	8 east	20-40	B2	Off site - full inspection not possible. Some measurements estimated.

Tree Number	Tree Name (species)	Ht (m)	Calculated Stem Diameter (mm)	Number of Stems	Root Protection Area (Radius, m)	N (m)	E (m)	S (m)	W (m)	Age Class	Clearance above ground (m)	Height of first branch (m)	Estimated life expectancy	BS Category	Comments / Recommendations
T10	Scots pine	24	500	1	6.00	1	3.5	6	2	M	3	5	20-40	B1	Vegetation near base of tree prevented full and detailed inspection.
T11	Scots pine	22	700	1	8.40	3	3.5	4	4	M	4	8	20-40	B1	Off site - full inspection not possible. Some measurements estimated.
T12	Scots pine	22	700	1	8.40	3	3	3.5	4	M	6	6	20-40	B1	No significant / notable defects observed during inspection.
T13	Scots pine	22	760	1	9.12	3	4	4	3	M	8	8	20-40	B1	Stem nearly in contact with gutter of next door. No significant / notable defects observed during inspection.
T14	Cherry	5	269	2	3.22	5	4	0	4	M	2	2	10-20	C1	Unremarkable tree of modest quality and of limited value in the wider landscape.
T15	Scots pine	22	740	1	8.88	4	4	4	4	M	7	7	20-40	B1	No significant / notable defects observed during inspection.
T16	Scots pine	22	600	1	7.20	4	2	3	3	M	10	10	20-40	B1	No significant / notable defects observed during inspection.

Tree Number	Tree Name (species)	Ht (m)	Calculated Stem Diameter (mm)	Number of Stems	Root Protection Area (Radius, m)	N (m)	E (m)	S (m)	W (m)	Age Class	Clearance above ground (m)	Height of first branch (m)	Estimated life expectancy	BS Category	Comments / Recommendations
T17	Scots pine	18	600	1	7.20	3	3	5	3	M	6	6	20-40	B1	Off site - full inspection not possible. Some measurements estimated.
T18	Oak	9	500	1	6.00	5	5	4	8	M	2 west	6	20-40	B1	Off site - full inspection not possible. Some measurements estimated.
T19	Douglas fir	25	600	1	7.20	4	4	4	4	M	4	7	20-40	B1	Vegetation near base of tree prevented full and detailed inspection.
T20	Acer ssp	3	196	6	2.35	3	2	3	4	M	1	1	10-20	C1	Small tree of limited value in the wider landscape.
G21	Spruce (dwarf variety)	4	100	1	1.20	1.5	1.5	1.5	1.5	M	0	0	10-20	C2	Small trees of limited value in the wider landscape.

KEY :
Tree No: (T= individual tree, G= group of trees, W= woodland)
Age class: Young (Y), Middle aged (MA), Mature (M), Over mature (OM), Veteran (V)
Height (Ht): Measured in metres +/- 1m

Appendix C
TREE FENCING DETAIL

Figure 3 **Examples of above-ground stabilizing systems**

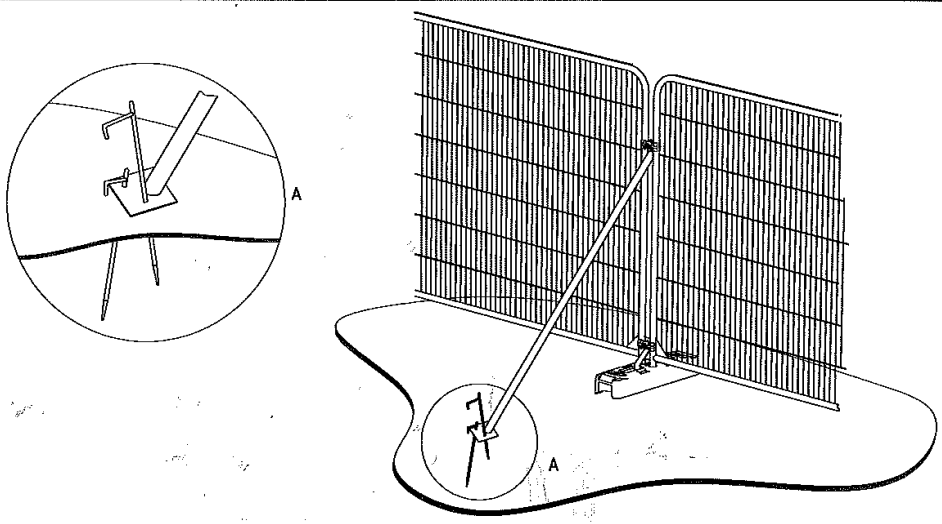

a) Stabilizer strut with base plate secured with ground pins

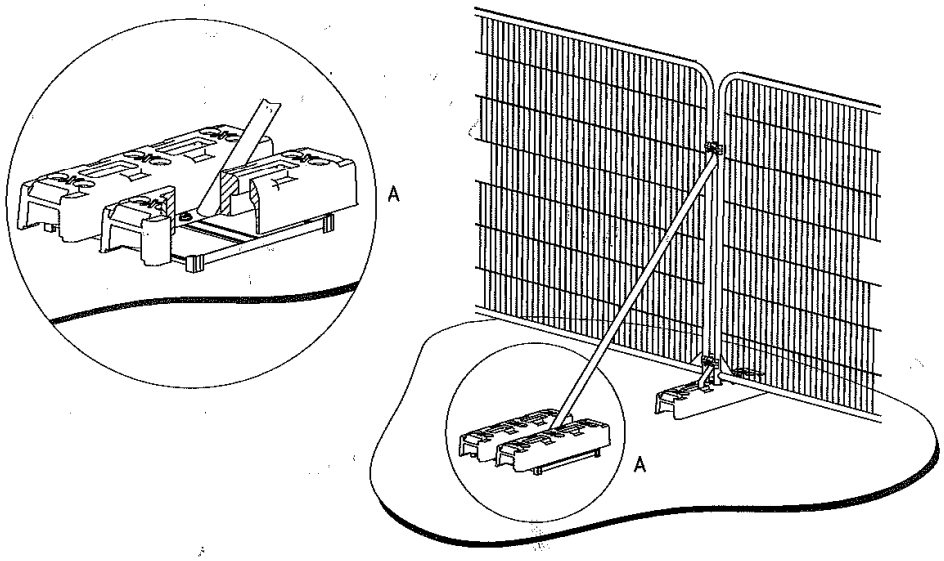

b) Stabilizer strut mounted on block tray