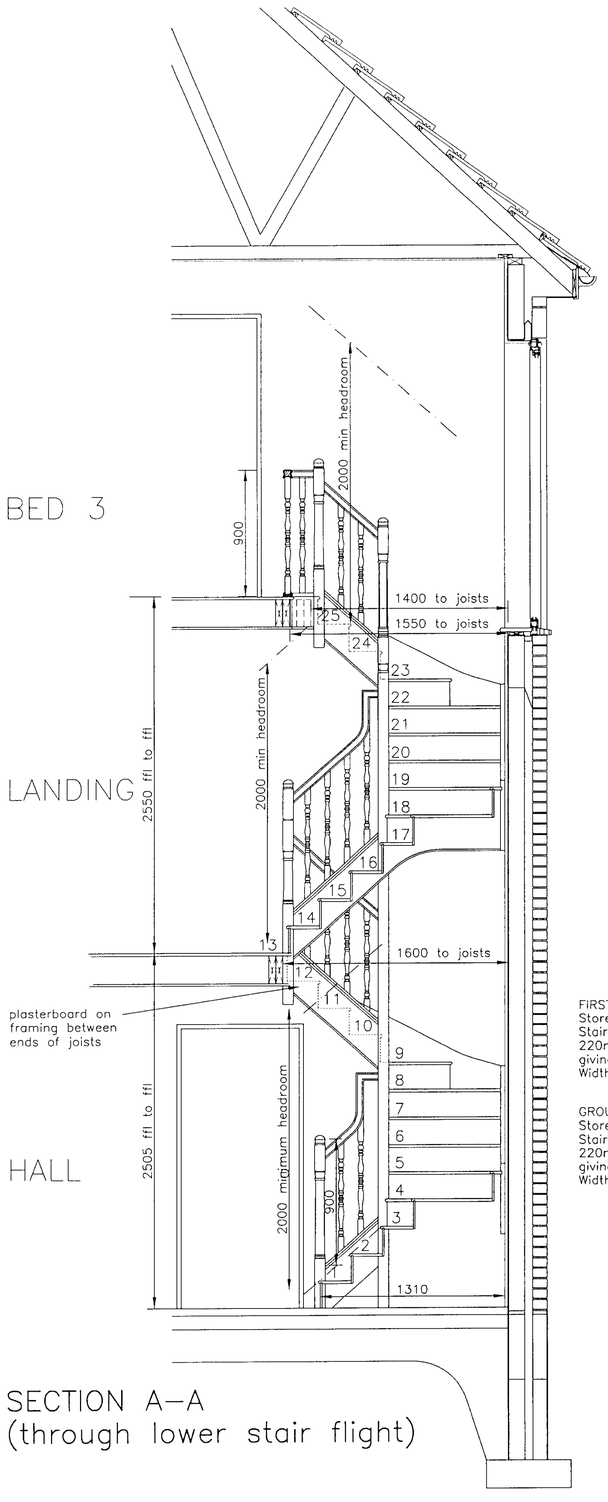

SECTION A–A
(through lower stair flight)

FIRST FLOOR / SECOND FLOOR
Storey height 2550:
Staircase to be constructed of 220mm goings & 196mm risers giving a pitch of 41°41' –
Width to be 870mm o/all strings.

GROUND FLOOR / FIRST FLOOR
Storey height 2505:
Staircase to be constructed of 220mm goings & 193mm risers giving a pitch of 41°15' –
Width to be 870mm o/all strings

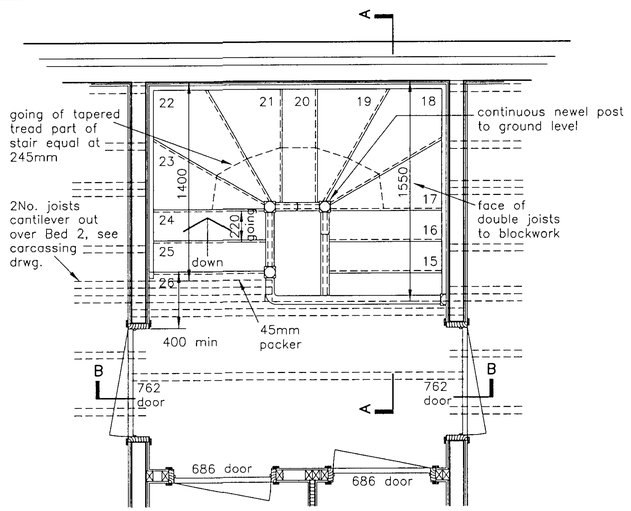

SECOND FLOOR PLAN

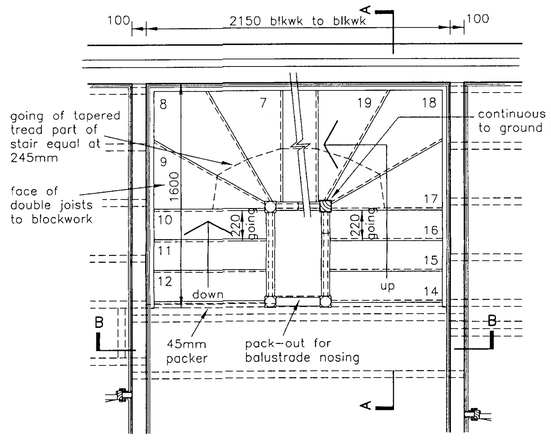

FIRST FLOOR PLAN

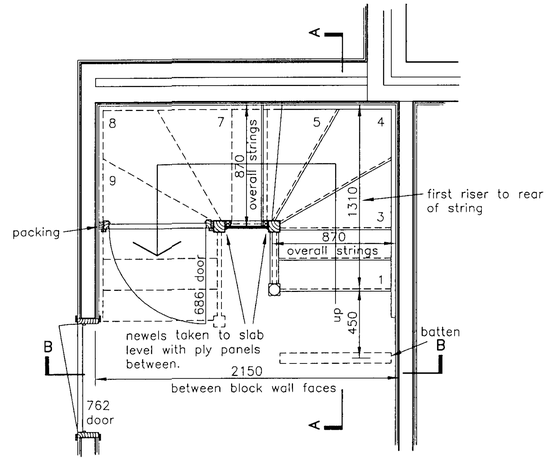

GROUND FLOOR PLAN

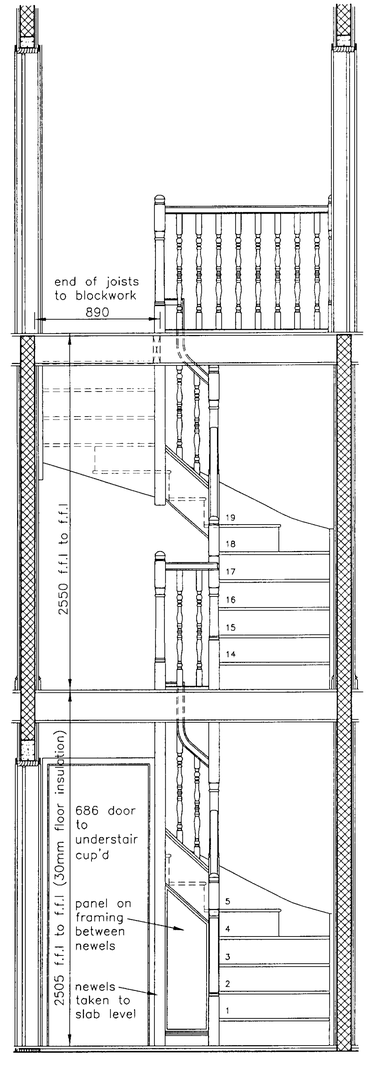

SECTION B–B (across hall)

REVISIONS

NOTES

Bryant Homes
Technical Services Ltd

title
FAIRBOURNE
CENTENARY
STAIRCASE DETAIL
PLANS & SECTION

drg no FB C 60

scale 1 : 20 date JUN.00

drawn M.T.B./E.I checked

CRANMORE HOUSE, CRANMORE BOULEVARD,
SHIRLEY, SOLIHULL,
WEST MIDLANDS, B90 4SD.
TELEPHONE 0121 711 1212 FACSIMILE 0121 711 2994

AutoCAD File: H:\HOUSES\HOMES\STANDARD\MOBILITY\CENTENARY\FBC\DWG\FBC60.dwg