:X SYSTEMS LTD
SOUTHPORT U.K. Tel.01704-26866 Fax.01704-25814
LONDON OFFICE Tel.0171-377-1777 Fax.0171-247-6181

APPLICATION NO:
F/2002/6097

LOCATION:
Ducks Nest Farm Eversley Road, Arborfield Cross Reading.

APPLICANT:
Crown Castle International C/O Waldon Telecom Ltd

PROPOSAL:
Proposed erection of replacement 27.5m high telecommunications mast. Removal of 24m high mast.

EARLIEST DATE FOR DECISION: **09/05/2002**

APPLICATION WILL HAVE EXPIRED ON:
04/06/2002

CASE OFFICER: **Natalie Brown**

48

DO

WOKINGHAM DISTRICT COUNCIL

TOWN AND COUNTRY PLANNING ACTS

Notification of Approval of Permission

Crown Castle International
C/O Waldon Telecom Ltd
Centennium House
Pyrford Road
West Byfleet
Surrey
KT14 6LD

Application Number: F/2002/6097

Parish: **ARBORFIELD**

Location: **Ducks Nest Farm, Eversley Road, Arborfield Cross, Reading.**

Proposal: **Proposed erection of replacement 27.5m high telecommunications mast. Removal of 24m high mast.**

The Wokingham District Council in pursuance of their powers under the above Acts and Regulations hereby **Approve Permission** for carrying out the above development in accordance with the application and the accompanying plans submitted to the Council subject to compliance with the following conditions, the reasons for which are specified hereunder.

Condition
1. The development hereby permitted shall be begun before the expiration of five years from the date of this permission.

Condition
2. Prior to the commencement of the development hereby permitted, the proposed equipment cabin and existing one-to-one cabin shall be painted in a colour to match the existing Vodaphone cabin.

Condition
3. Within one month of the erection and operation of the proposed replacement mast, the existing mast shall be dismantled and removed from the site.

Reason
1. In pursuance of Section 91(1) of the Town and Country Planning Act 1990.

Reason
2. In the interests of visual amenity.

Reason
3. In the interests of visual amenity.

Informative

1. You are advised, in compliance with The Town and Country Planning (General Development Procedure) (England) (Amendment) Order 2000, that the following policies and/or proposals in the development plan are relevant to this decision:

Berkshire Structure Plan Policies C2, C6 and TC1.
Loddon Area Local Plan Policies LTV2 and LC1.
Deposit Draft Wokingham District Local Plan Policies WOS3, WCC1, WCC2 and WIC14.

T. G Watson

Trevor Watson
Development Control Manager
Date: 31/07/2002

Notice checked by: _____

If this notice grants permission to proceed with the proposal the applicant is reminded that it relates to planning permission only and does not constitute approval under any other legislation including Building Regulations.

6097

09 APR 2002 6097

09 APR 2002 6097

waldon telecom

Waldon Telecom Ltd
Centennium House
Pyrford Road
West Byfleet
Surrey
KT14 6LD

Telephone
01932 411011

Fax
01932 411012

E-mail
enq@waldontelecom.com

Website
www.waldontelecom.com

Our ref: PJ/1491241

1st March 2002

The Chief Planning Officer
Wokingham District Council
PO Box 157
Shute End
Wokingham
Berkshire
RG40 1WR

For the attention of Natalie Brown

Dear Sir

CROWN CASTLE INTERNATIONAL / HUTCHISON3G
REDEVELOPMENT OF EXISTING MAST AT DUCKS NEST FARM, EVERSLEY ROAD, ARBORFIELD.
SUBMISSION OF PLANNING APPLICATION

Following the prior consultation in connection with the above the proposals are now finalised, reflecting so far as is practicable the guidance offered. Thus, on behalf of Crown Castle International, we submit herewith a planning application for a replacement lattice mast of 27.5m in height to accommodate mast sharing by Hutchison3G. The existing mast is not structurally capable of accommodating the additional equipment required to allow Hutchison3G to share the site. The equipment on the existing mast will be relocated on to the new mast at the heights shown on the enclosed drawings. In addition new equipment as illustrated on the enclosed drawings will be located on the mast and at ground level.

To enable you to register and determine the application we have enclosed for your attention the following:

i. The requisite numbers of your completed planning application forms.

ii. The requisite numbers of an O.S. site plan scale 1:2500 reference 17446.2.04/2 showing the red line area.

iii. Drawing nos. 17446.2.04/2; 17446_07_100_M03_03 (north elevation); 17446_07_100_M03_03 (west elevation); 17446_07_100_M03_03 (south elevation); 17446_07_100_M03_03 (east elevation) and 17446_07_150_M03_03.

iv. The relevant Certificate under Section 66

Registered in UK
No: 3651880
VAT Registration
No: 709 2762 24

Registered Office:
Centennium House
Pyrford Road
West Byfleet
Surrey
KT14 6LD

INVESTOR IN PEOPLE

ISO 9002 REGISTERED FIRM

v. A cheque in the sum of £190.00 in respect of the appropriate fee.

vi. The relevant Coverage Plots.

vii. A statement on health and safety, together with accompanying diagrams.

viii. Leaflets from the Department of Health.

ix. A declaration of ICNIRP compliance.

x. A background paper on Hutchison3G

xi. A copy of the prior consultation letter sent previously to your Council.

Due to the need to provide continuity of coverage both masts will need to be insitu concurrently. This would be limited to the period during which the equipment on the new mast is commissioned. Once the equipment is fully commissioned removal of the old structure could commence. To regulate the removal of the old structure a condition on the planning permission would be acceptable.

A Public Service

As explained in the background paper, Hutchison3G is licensed to establish a new network for the delivery of third generation services. The installation proposed will therefore form an integral part of a comprehensive network being planned to cover the UK. When launched the services will be made available to the public and the background paper highlights the very significant benefits that will be associated. These include economic benefits of local and national significance and a major contribution to sustainable objectives.

The Development Proposed

Crown Castle International has a requirement to redevelop the existing telecommunications mast at Ducks Nest Farm to enable Hutchison3G to install their antennas. In order to maintain the necessary clearances between the various Operators' equipment, the new mast needs to be higher than the existing mast.

At ground level, Hutchison3G require an equipment cabinet. This cabinet is less than 2.5 cubic metres in volume. Orange's existing equipment will be moved to allow the erection of the new replacement mast (see drawing 17746_07_150_M03_03).

Due to the volume of equipment already installed on the existing mast, and the requirement for additional equipment to support Hutchison3G, it is not possible for Crown Castle International to use a more lightweight mast. The lattice mast proposed has a thicker profile at its base and then tapers inwards to the middle of the mast. This ensures that the upper part of the mast is a slim as possible whilst allowing the structural rigidity that Crown Castle International require.

In making your determination, we should be grateful if the following matters could be taken into account, in addition to all the other supporting and background documentation submitted.

The Hutchison3G Requirement

Hutchison3G is licensed to establish a new network for the delivery of third generation services. The installation proposed will therefore form an integral part of a comprehensive network being planned to cover the UK. In particular, it is seeking to provide coverage to Arborfield Cross and Arborfield Garrison as well as the area surrounding the application site.

To help illustrate this, three coverage plots are submitted (Plot A, B and C). These are computer-generated estimates of coverage, which tend to exaggerate true levels of coverage on the ground, because they only take into account general topography. They do not therefore properly reflect attenuation of radio signal that might occur because of manmade features such as buildings and cuttings, or the effects of natural features such as large trees and woodland. However, they are a useful tool for explaining how a new installation will fit into the wider network.

Plot A, which shows existing and committed sites, in the network illustrates how there is an effective gap in coverage over the area described above. Plot B showing the existing and proposed coverage shows how an installation at the application site should substantially remedy the situation.

For information, Plot C shows the estimated coverage from the proposed installation on its own. However, you will appreciate the need to consider the proposed installation in the context of Hutchison3G's national network, as portrayed in the other two plots.

The relationship of the cell to the national network has already been drawn to your attention in the prior consultation carried out. You will also be aware from this that this application was preceded by a proper attempt to accommodate the requirement so as to minimise potential environmental impact, consistent with planning policy. We expand upon this below, with reference to national planning policy.

National Planning Policy Considerations

The recently revised PPG8 - *Telecommunications,* continues to stress the benefits of modern telecommunications, and the longstanding encouragement towards such development as being essential to a modern economy and contributing to sustainable objectives remains. These are matters amplified upon in the accompanying background paper.

In view of this policy, authorities are advised in PPG8 to respond positively to proposals for telecommunications development and to understand the associated special problems and technical needs. That advice and the permitted development rights maintained to facilitate the establishment of networks apply even in locations usually subject to policies of restraint.

PPG8 also emphasises the significance of national networks and the context of the proposed installation in this regard is explained above, together with the coverage plots submitted.

Against this background of encouragement, PPG8 also recognises the need, now with greater emphasis, to strike an appropriate balance between operational and environmental considerations. The operators own 10 Commitments are an industry response to introduce a process to better help strike that balance, together with local planning authorities. That process leading up to this application has been properly followed leading to such a balance being struck in this case.

In particular, paragraph 66 of the Supplementary Guidance to PPG8 clearly states that in order to limit visual intrusion the Government attaches considerable importance to keeping the numbers of radio and telecommunications masts, and of the sites for such installations, to the minimum. Thus, it is clear that operators should mast or site share whenever possible and this is reflected as a requirement in their licences. The proposal to redevelop the existing mast at the existing Crown Castle site is wholly consistent with this and this is a matter we explained in some detail in our prior consultation letter, a further copy of which is included with this application.

The onus set out in paragraphs 66 and 67 on operators to demonstrate why a new mast site is necessary, requires them to provide compelling evidence that mast and site sharing has been properly explored as an option first. Again, as the proposal entails mast sharing and will not result in the development of a new site, it is consistent with the approach advocated in national policy.

In view of the existing apparatus on the site, the net additional impact from the proposal should be well within acceptable parameters and less than the impact associated with the development of a new site. This is particularly the case if all aspects of developing a base station site are taken into account, including a new radio mast on a new site, the provision of power, the provision of vehicular access and the creation of a new secure compound.

The prior consultation exercise carried out affirms that mast sharing as proposed represents the best solution available, as no suitable and available alternative was identified. Hence, this application.

The Development Plan

Because PPG8 is so new, we have focussed on why the proposal is properly justified against the approach set out therein. However, we have also had due regard to the Development Plan.

For the purposes of Section 54A of the Town and Country Planning act 1990, as amended, the development plan includes the Berkshire Structure Plan 1991-2006, incorporating alterations, as adopted August 1997 (the Structure Plan).

Chapter 2 of the Structure Plan identifies the significant pressures on Berkshire's environment that influence the overall strategy set out in Chapter 3. This is encapsulated in Policy OS1, which seeks sustainable development and an improvement of the quality of life in Berkshire. Amongst other things, this policy seeks improvements to infrastructure, services and amenities (vii); the promotion of wider economic opportunities (ii); and more sustainable patterns of development (iv) and use of transport (viii).

These factors feed through into the relevant sections of the Structure Plan. The background paper on The Benefits of Modern Communications provide an illustration of how the Hutchison3G networks will make a significant contribution towards the attainment of these key strategic objectives and these are specific factors recognised in Section 11 that deals with telecommunications.

Wokingham District Council's Local Plan, Deposit Draft, refers to telecommunications in part WIC14 and refers to the guidance contained within the Berkshire Structure Plan.

In the light of this information and the serious attempts to minimise environmental impact, we trust you can agree the development proposed is in accordance with the relevant development plan policies and should be approved accordingly.

We trust all the supporting material submitted is of assistance and request the application be determined in an expeditious manner. If available, we ask that made your determination by using delegated powers. We trust everything is in order, but if you have any queries, please do not hesitate to contact me.

Yours faithfully

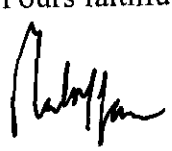

Philip James

07970100758

On behalf of
CROWN CASTLE UK LTD

Enterprise V3.4

Copyright © Edward Wong

Ducks Nest Farm

Coverage plot without surrounding sites

Fri Dec 07 15:40:31 2001

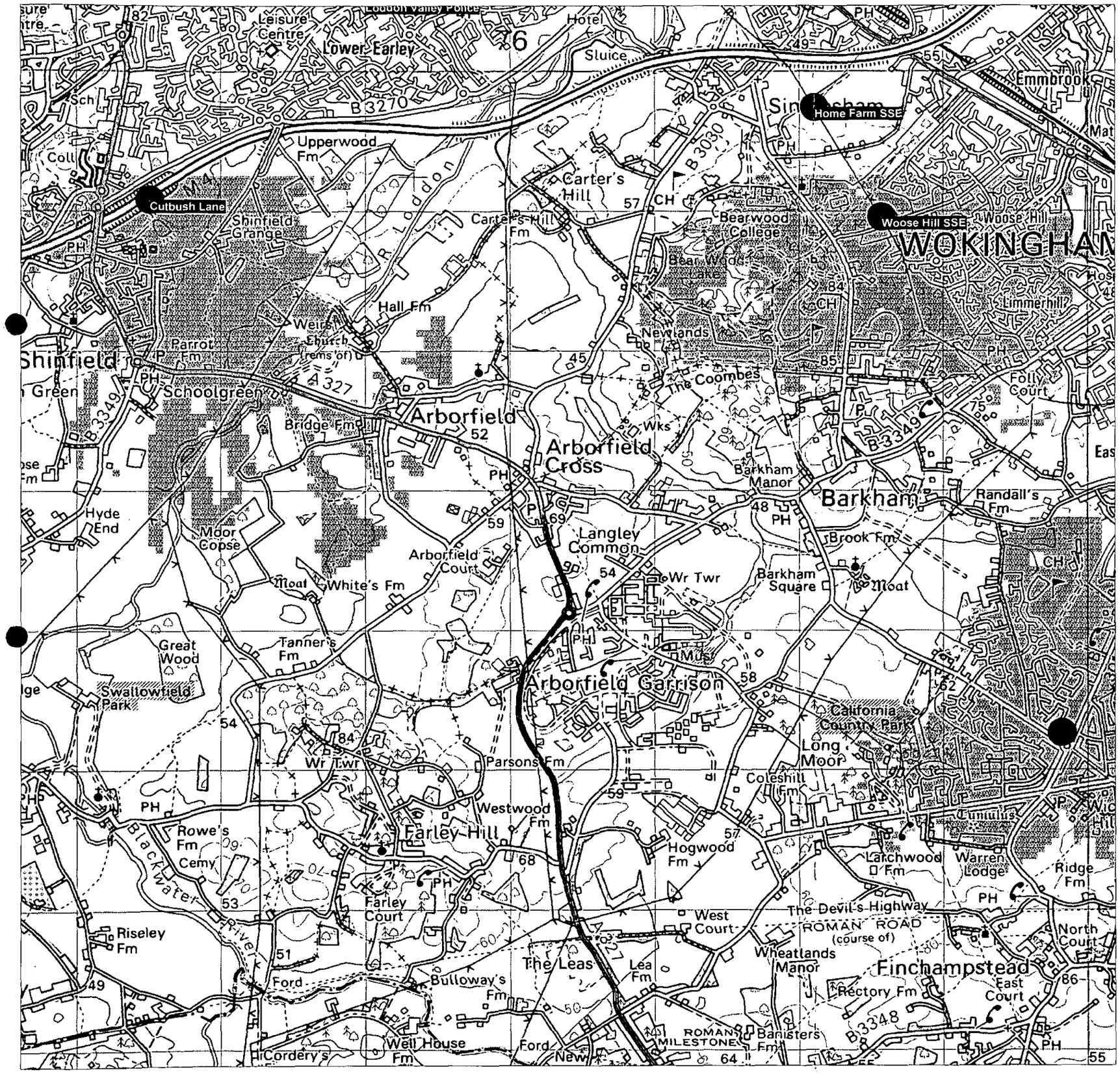

09 APR 2002 6097

PLOTA

Enterprise V3.4

Copyright © Edward Wong

Ducks Nest Farm

Coverage plot with surrounding sites

Fri Dec 07 15:37:05 2001

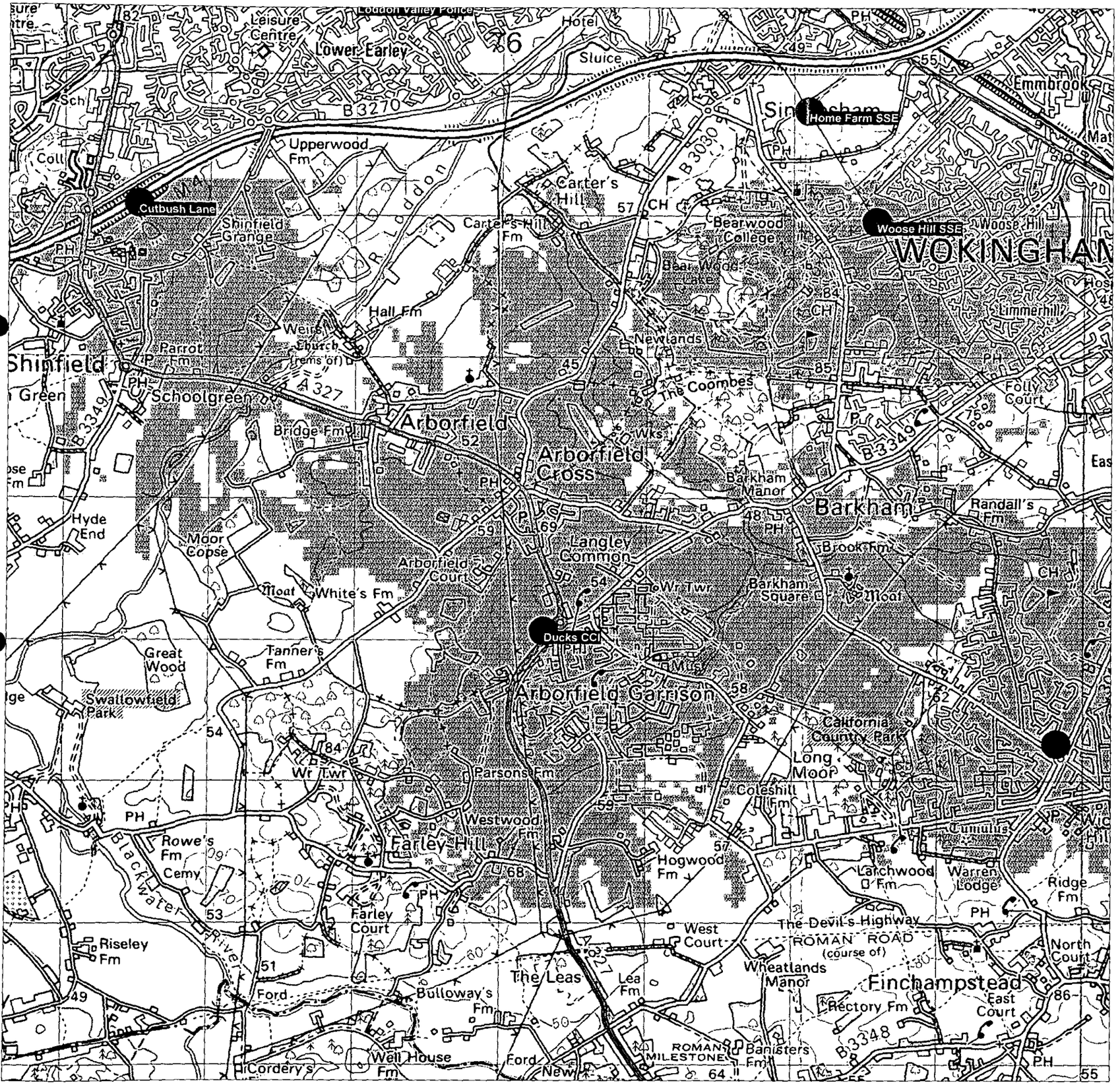

Map Backdrop
Best Server
UMTS
x> -95.5 dBm Suburban
[Site] [Property] EW_active Sites
Candidates: 00165881
Candidates: RG1005
Candidates: RG1007

09.APR.2002* 6097

Top Right: 000°50'47.83"W 51°24'56.53"N
Bottom Left: 000°57'24.14"W 51°22'16.29"N
Scale Ratio 1:27736

0 0.50 1.00 1.50 2.00 Km

PLOT B

Enterprise V3.4

Copyright © Edward Wong

Ducks Nest Farm

Coverage plot of Ducks Nest Farm CCI

Fri Dec 07 15:39:14 2001

Map Backdrop
Best Server
UMTS
x> -95.5 dBm Suburban
[Site] [Property] EW_single Sites
Candidates: 00165881
Candidates: RG1005
Candidates: RG1007

09 APR 2002 6097

Top Right: 000°50'47.88"W 51°24'56.53"N
Bottom Left: 000°57'24.09"W 51°22'16.29"N
Scale Ratio 1:27729

0 0.50 1.00 1.50 2.00 Km

PLOT C

Our Ref: PJ/1491241

COPY

waldon telecom

Waldon Telecom Ltd
Centennium House
Pyrford Road
West Byfleet
Surrey
KT14 6LD

Telephone
01932 411011

Fax
01932 411012

E-mail
enq@waldontelecom.com

Website
www.waldontelecom.com

07 March 2002

The Estates Department
Crown Castle International
PO Box 98
Warwick
CV34 6TN

09 APR 2002 6097

Dear Sirs

Re: PLANNING APPLICATION FOR REDEVELOPMENT OF EXISTING CCI MAST AT DUCKS NEST FARM, EVERSLEY ROAD, ARBORFIELD, BERKSHIRE. YOUR REF: 1491241.

Please find attached a Certificate A Notification regarding a full planning application that has been submitted on behalf of Crown Castle UK Ltd for the installation of telecommunication equipment at the above site.

Should you require any further information, do not hesitate to contact me.

Yours faithfully

PHILLIP J JAMES

Mob: 07970 100758

Enc.

Registered in [illegible]
No: 365155
VAT Registration
No: 709 2762 [illegible]

Registered Office
Centennium House
Pyrford Road
West Byfleet
Surrey
KT14 6LD

S:\Clients\C C I\1491241\CCI 010302.doc

INVESTOR IN PEOPLE

QMS ISO 9002 REGISTERED FIRM

1789/a

SECTION 66 CERTIFICATE

Application No.

Please fill in both Certificate A, B, C or D and the Agricultural Holdings Certificate. Delete sections not relevant.

(a) "Owner" means a person having a freehold interest or leasehold interest the unexpired term of which is not less than 7 years.

OR

+ See Note (a) to Certificate A

CERTIFICATE A

I certify that:

at the beginning of the period of 21 days ending with the date of the accompanying application, nobody, except the applicant, was the owner of (a) of any part of the land to which the application relates.

09.A.2002* 6097

CERTIFICATE B

I certify that:

I have/The applicant has* given the required notice to everyone else who, at the beginning of the period of 21 days ending with the date of the accompanying application was the owner (a) of any part of the land to which the application relates, as listed below.

Owner's(a) name	Address at which notice was served	Date on which notice was served

OR

CERTIFICATE C

I certify that

- I/The applicant* cannot issued a certificate in accordance with either paragraph (a) or paragraph (b) of Section 66(1) of the Act in respect of the accompanying application.

- I have/The applicant has* given the required notice to the persons specified below, being persons who at the beginning of the period of 21 days ending with the date of the application were owners (a) of any part of the land to which the application relates.

Owner's(a) name	Address at which notice was served	Date on which notice was served

(b) Insert description of steps taken.

(c) Name of local newspaper circulating in the area where the land is situated.

(d) Date of publication (which must be not earlier than the beginning of the period of 21 days ending with the date of the application).

- I have/The applicant has* taken all reasonable steps open to me/him/her* to find out the names and addresses of the other owners (a) of the land, or of a part of it, but have/has* been unable to do so. These steps were as follows:

  (b) .....

  .....

- Notice of the application as attached to this Certificate, has been published in the (c) .....

  on (d) .....

1789/b

CERTIFICATE D

I certify that

● I/The applicant cannot issue a certificate in accordance with paragraph (a) of Section 66 of the Act in respect of the accompanying application.

OR

● I/The applicant have/has taken all reasonable steps open to me/him/her to find out the names and addresses of everyone else who, at the beginning of the period of 21 days beginning with the date of application was the owner (a) of any part of the land to which the application relates, but have/has been unable to do so. These steps were as follows:

(b) . . . . . .

. . . . . .

(b) Insert description of steps taken

(c) Insert name of local newspaper circulating in the area where the land is situated.

(d) Insert date of publication (which must not be earlier than the beginning of the period of 21 days ending with the date of the application).

● Notice of the application as attached to this Certificate, has been published in the (c) . . . . . ●

on (d) . . . . . .

ALL APPLICANTS MUST COMPLETE THIS SECTION

If any of the site is part of an area of land which is let or there is an agreement to let the land for agricultural purposes to a tenant, it may be an agricultural holding. Further advice may be obtained from the Department.

Agricultural Holdings Certificate

One or other section must be crossed through as not applicable.

If the applicant is the sole agricultural tenant he or she must delete the first alternative and insert "not applicable" as the information required by the second alternative.

● None of the land to which the application relates is, or is part of, an agricultural holding. ●

OR

● I have/The applicant has given the required notice to every person other than my/him/herself who, at the beginning of the period of 21 days ending with the date of the application, was a tenant of an agricultural holding on all or part of the land to which the application relates, as follows:

Tenant's name	Address at which notice was served	Date on which notice was served

Signed . . . . . .

On behalf of Crown Castle International

Date 01/03/2002

TOWN AND COUNTRY PLANNING ACT, 1990
TOWN & COUNTRY PLANNING GENERAL DEVELOPMENT ORDER 1988
Certificate under Section 66

Received
18 FEB 2002
Waldon Telecom

Tel: (0118) 974 6492 (Direct Line)
E-Mail: Natalie.Brown@wokingham.gov.uk
Date: 13 February 2002
My ref: NB/MLT/Arborfield/Pre-app

WOKINGHAM UNITARY
Aiming for Excellence

Phillip James
Waldon Telecom Ltd
Centennium House
Pyrford Road
West Byfleet
Surrey
KT14 6LD

COPY

Environmental Services Department
Planning Services
P.O. Box 157
Shute End, Wokingham
Berkshire RG40 1WR
Fax: (0118) 974 6484
Minicom No: (0118) 974 6991
DX: 33506 – Wokingham

09.APR.2002* 6097

Dear Mr James,

PROPOSED REPLACEMENT OF EXISTING TELECOMMUNICATIONS MAST AT DUCKS NEST FARM, EVERSLEY ROAD, ARBORFIELD

I refer to your letter received on the 1 February 2002 with reference to the above.

The mast at the above site was given approval to be extended to add additional antenna and dishes to the existing mast. The existing lattice mast currently stands at approximately 23m. I note that you are proposing a replacement lattice mast of 27.5m. At present, the site is quite exposed along the road edge, and so in order for us to support this type of replacement we would require additional landscaping and would prefer a more elegant type of mast as opposed to a lattice, given that you are proposing an increase of 4.5m.

I can find no record of a 15m high telecommunications mast at Parsons Farm. However, the area to west of and including Parsons Farm is designated as an Area of Special Landscape Importance and as an Area of Special Character. Therefore, if the existing mast is located within an area with the above designations, we would have concerns over increasing it to a 25m high mast, especially if it was of the lattice type. Please send a more detailed located plan showing the location of the mast if you wish us to comment further on the suitability of this site for a mast redevelopment.

I hope this information is of assistance to you, however, it is of an advisory nature only and given without prejudice to any future decision that this Council may take. Should you wish to discuss any matter further please do not hesitate to contact Natalie Brown.

Yours sincerely

M L THORP
Principal Development Control Officer

Our ref: PJ/1491241

COF /

19th December 2001

09 APR 2002 6097

The Chief Planning Officer
Wokingham District Council
PO Box 157
Shute End
Wokingham
Berkshire
RG40 1WR

For the attention of Natalie Brown

Dear Sir

HUTCHISON 3G UK LTD: PROPOSED REPLACEMENT OF EXISTING CROWN CASTLE INTERNATIONAL OWNED MAST AT DUCKS NEST FARM, EVERSLEY ROAD, ABORFIELD RG2 9P.
PRE-APPLICATION CONSULTATION WITH LOCAL PLANNING AUTHORITY

We write in connection with proposals by Hutchison 3G UK Ltd to share the existing telecommunications facility owned or controlled by Crown Castle International at the above. The operator is looking to install apparatus for a mobile telecommunications system in accordance with licence obligations imposed by Government.

The operator has a requirement for a new site in order to provide coverage to their network in the area surrounding the above. If any application is made, more detailed information would be supplied, but to assist your understanding of the full context of the proposal we attach background information on the Benefits of Modern Communications and How the System Works.

Before submitting an application, we are writing to seek your detailed views on the proposals. Before doing so we set out some relevant background information to explain why it is considered appropriate for the operator to share our site.

Crown Castle International

Crown Castle International owns or controls a significant proportion of the UK radio telecommunications infrastructure through Crown Castle UK Ltd. Our sites represent the largest independent portfolio of radio telecommunications assets in the UK and comprise around 2500 towers, largely based on the former BBC transmission network, and radio telecommunications rights to about 4000 BT exchange sites.

Our sites are all available for sharing by the mobile operators and they are particularly suitable for their use, because they all have the following attributes:

- They are in existing telecommunications use
- Crown Castle International is a willing and sympathetic provider, prepared to agree reasonable terms on a global basis
- Adequate power supply and emergency backup arrangements
- Vehicular access
- Security
- Properties already developed or capable of being developed further to satisfy stringent Condam regulations.

In addition, all our mobile telecommunications installations operate within applicable national or international guidelines on health and safety, including those adopted by the International Commission for Non-Ionising Radiation Protection (ICNIRP). Appropriate ICNIRP exclusion zones can therefore be designed into proposals by mobile operators, taking into account any cumulative increases that may occur through multiple use.

Whether in urban or rural locations these attributes that exist at all Crown Castle International sites, may be difficult to replicate elsewhere without causing added environmental disruption to varying degrees.

An additional and very significant attribute that is also present at Crown Castle International sites is good connectivity or access to high capacity optical fibre networks. This is a new and very important requirement for the developing Third Generation ("3G") networks because of the high volumes of data that they will transmit. This means base stations sites will have to rely much more on optical fibre links to control and switching centres, in a process known as backhaul. For this reason, the operators need to make best use of high capacity optical fibre portals as found at most Crown Castle International sites.

Network Rollout Strategy

The operators' 10 Commitments and new guidance found in the revised version of PPG 8 – *Telecommunications*, now require pre-application dialogue to take place. Paragraph 59 of the Supplementary Guidance to PPG 8 points out that this should be within the context of the operator's strategy for telecommunications development in the area.

The pre-rollout discussions carried out by the operator would have emphasised that the strategy for network rollout has to be based around existing telecommunications installations and other existing structures as a matter of licence requirement and planning policy. As explained above the need to make

best use of available portals to high capacity optical fibre networks, or sites that carry such potential, is also an important element towards a speedy and effective network rollout strategy. The use of Crown Castle International sites is therefore an integral part of any network rollout strategy.

Paragraph 66 of the Supplementary Guidance of PPG 8 is very clear in emphasising that in order to limit visual intrusion the Government attaches considerable importance to keeping the numbers of radio and telecommunications masts, and other sites for such installations, to the minimum.

As a consequence, there is a very strong onus on operators seeking to develop new sites for radio masts. If so, they should show evidence that they have explored the possibility of erecting antennas on an existing building, mast or other structure. As part of that evidence, they would normally be expected to have interrogated the local planning authorities mast register, where one exists, the register maintained by the Radiocommunications Agency and the operators' own joint database. All Crown Castle International sites are included in the operators' database and the radio masts should be included in the other two.

The use of a Crown Castle International site in this case therefore forms part of the operator's rollout strategy and will ensure licence obligations and national planning policy on mast or site sharing are satisfied.

To stress the importance of sharing the Crown Castle International portfolio, your attention is drawn to the evidence given by the operators to the House of Commons Trade and Industry Select Committee on Mobile Phones, which made its report in March 2001.

As against an estimate of about 22,500 existing mobile phone installations (some shared), the operators provided estimates that by 2003 this figure would need to increase to around 50,000 installations. This figure was netted down to between 6,000 to 9,000 new radio masts throughout the UK. This assumed the balance of 18,500 to 21,500 would be found by sharing existing installations or using other high buildings, such as those owned or controlled by Crown Castle International.

Taking the Crown Castle International portfolio of 6,500 sites, if each one were shared by an average of two operators, then it could absorb 13,000 new base stations and if shared by an average of three this would increase to 19,500. By contrast, every time an operator is unable to use a Crown Castle International site, that requirement could very well displace itself as one for a new radio mast.

It is important to recognise therefore that the figures indicated by the operators for 2003 is only for launching their new 3G networks. The 3G licences require the operators to achieve coverage over 80% of the UK population by the year 2007 and to meet the reasonable demands of that area. As with 2G the coverage figure is not a target but a minimum licence requirement – competition and customer demands will mean that greater coverage will have to be made.

The final figures for mature of 3G coverage and capacity are therefore enormous – the Scottish NPPG 19 – *Radio Telecommunications* estimates this could be around 80,000. The Conservative Party has previously made an estimate of

100,000. Whatever the final figure will be no one knows for sure. What we do know is that every estimate put on potential site numbers in the early days of 2G proved to be a considerable underestimate and it is worth remembering that Orange, for example, launched its 2G network with under 1,500 sites with current numbers climbing towards 10,000.

Hence, if the Government objective of keeping to a minimum the number of new radio masts is to be achieved, then maximum use must be made of existing telecommunications assets, including those owned by Crown Castle International.

Pre-Application Request for Detailed Comments

In accordance with the advice found in PPG 8 plan and the operators' 10 Commitments, we would like to obtain any detailed comments you might have before any application is submitted.

In order to share our site, we propose to carry out the following on behalf of the operator:

- replace the existing tower at Ducks Nest Farm with a new tower 27.5 metres in height necessary to support the additional antennas required and to provide the necessary vertical separation between systems, and to install ground based equipment cabinets within the existing compound.

Although as explained above proper operational and environmental reasons point towards using the Crown Castle International site (Option A), other alternatives have been considered. However, for the following reasons they have been assessed to be poorer options, or indeed ones that are not truly suitable or available:

Option B

Site Name: Cellnet Mast at Parson Farm

National Grid Ref: TBC, but approximately 475700 / 165000

Type of Installation required: This would involve the redevelopment of the existing 15m high mast, in order to allow Hutchison 3G an antennas height of 25m in order to provide the required level of coverage.

The redevelopment of the existing Crown Castle International mast at Ducks Nest Farm would be more sympathetic than a redevelopment of the Cellnet Mast.

An assessment has been carried out using the operators' traffic light model on using our site and this option has been categorised green. That being the case, in accordance with the operators' joint process on public consultation, it is proposed that any further consultation should rely upon the statutory consultation associated with the normal planning process. If however you feel the rating to be incorrect or consider other interested parties should be notified at this stage, then please let us know and pass on copies of this documentation or let us have details immediately.

We look forward to receiving any comments you may have. It would be greatly appreciated if you could either forward your comments or contact us to arrange a meeting within 10 working days.

In the meantime, if you have any queries, please do not hesitate to contact me.

Yours faithfully

Phillip James

07970 100758

On behalf of
CROWN CASTLE UK LTD

COPY

Our ref: PJ/1491241

19th February 2002

Ms Catherine Brimbell
Wokingham District Council
PO Box 157
Shute End
Wokingham
Berkshire
RG40 1WR

Dear Ms Brimbell

HUTCHISON 3G UK LTD: PROPOSED REPLACEMENT OF EXISTING CROWN CASTLE INTERNATIONAL OWNED MAST AT DUCKS NEST FARM, EVERSLEY ROAD, ABORFIELD RG2 9P.

Further to our telephone conversation on the 19th February, I am writing in connection with proposals by Hutchison 3G UK Ltd to share the existing telecommunications facility owned or controlled by Crown Castle International at the above site.

The existing mast would need to be replaced with a slightly larger mast in order to accommodate Hutchison 3G's equipment; this is detailed in the enclosed drawings.

We have already received comments from your Planning Officer Natalie Brown and, in her opinion, the proposal would benefit from a landscaping scheme. It would therefore be extremely helpful if you could provide me with some guidance as to a suitable scheme for this proposed development, in particular suggested species and spacing of any planting. With this information available, I can then arrange for Crown Castle to produce a formal landscaping scheme that can then be presented to your planning department as part of the application.

I look forward to receiving your comments. Should you require any further information then please do not hesitate to contact me. Many thanks for your help in advance.

Yours sincerely

Phillip James

07970 100758
On behalf of
CROWN CASTLE UK LTD

COPY

Our Ref: PJ/1491241

19th February 2002

Mrs Zoe Bolton
25 Melrose Gardens
Arborfield Cross
Berkshire
RG2 9PY

Dear Mrs Bolton

Re: Proposed mast redevelopment at Ducks Nest Farm, Eversley Road, Arborfield.

Crown Castle International is an independent owner and operator of shared radio telecommunications and broadcast infrastructure. In the UK, the company owns and operates the BBC's transmitter network, as well as large number of mobile phone and other radio transmission sites. We have also recently entered into an agreement with BT to locate radio telecommunications equipment at a number of BT exchange buildings, subject to normal planning procedures and strict health and safety regulations.

Nearly seven out of ten people in the UK now have a mobile phone. The five UK mobile phone operators work constantly to provide the ever-increasing quality, capacity and depth of coverage that local residents and businesses demand and which the operators are obliged to provide in accordance with their licences from government.

In addition the operators are working to provide new "third generation" systems (known as "3G"), which will provide much enhanced services to customers.

We have received a request from Hutchison3G to install equipment at the existing mast at Ducks Nest Farm. Unfortunately the existing mast needs replacing with a slightly larger mast to accommodate the extra equipment. I enclose a copy of our pre-application consultation letter to the planning authority, which provides more detail on this proposal. Also enclosed are drawings showing details of this proposal. I would also point out that Crown Castle International are happy to provide a landscaping scheme and I am awaiting details of suggested planting from Wokingham District Council's Environmental Services division.

The Government's has recently announced revised planning policy guidance on telecommunications ("PPG8"), which encourages wider consultation prior to the making of a planning application for installations of this type. In addition the mobile phone operators and the Local Government Association have recently agreed a procedure for delivering improved public consultation.

The purpose of this letter is to invite your councillors as the local representatives for the area to comment on this proposal so that your views can, if practicable, be taken into account prior to the making of any application to the planning authority.

To allow this to happen Crown Castle intends not to make any application on this site within fourteen days from the date of this letter.

Once any application is made, further public consultation will be carried out by the planning authority under the normal statutory planning process that applies.

I appreciate you may wish to consult locally and you or others may have a number of questions concerning the proposal. I would be pleased to provide further information to assist you should it be required.

I enclose some information sheets on the subject of radio safety, which also provide independent sources of information on this topic.

I trust this is helpful and if we do not receive any observations within fourteen days of the date of this letter we shall assume you have none to make at this stage.

In the meantime, if you have any queries, please do not hesitate to contact me on the number above.

Yours sincerely

Phillip James

On behalf of
CROWN CASTLE UK LTD

Enc: LPA consultation letter and drawings
Crown Castle radio safety leaflets (x2)



Safety of mobile phone base stations

Purpose

This information sheet provides a summary of the issues surrounding the safety of mobile phone base station transmitters in the UK.

It should be read in conjunction with our 'Safety of Transmitter Sites' sheet which addresses more generally the question of radio safety in the UK.

Mobile phone use in the UK

Seven out of ten adults in the UK now own a mobile phone and this number is expected to continue growing.

Indeed, the pattern of mobile phone use has also changed. Initially mobile phones were used when no other was available, but now an increasing number of people are using their mobile phone as their main, or in some cases, only phone.

Mobile phone users expect their phones to work everywhere; not just in the street, but also in the home, in office buildings, in shopping centres, and in more remote locations.

Mobile phones and base stations

Mobile phones are very low-power (1 or 2 watts) digital radio transmitter / receivers. They communicate by two-way radio with nearby radio base stations.

The low power of the phones means that the base station must be nearby to receive the signals from it.

Because the limiting factor in a mobile phone system is the base station's ability to register the weak signal from the phones, there is no need for the base station to transmit to the phones at high power. Mobile phone base stations are therefore very low-power transmitters.

Range and location

Mobile phone radio transmissions travel in straight lines, like light. They are greatly reduced by passing through, or reflecting off trees or buildings.

In open rural areas, a mobile phone may successfully communicate with a base station at anything up to a few kilometres away, however, in an environment where there are hills, trees or buildings, the effective range may be much reduced.

To meet customer demand in city centres, each operator's base station may be five hundred metres apart, or even less, to provide adequate coverage and capacity.

Microwaves

Mobile phone transmissions are described as 'microwave'. This term is normally used (definitions vary) to describe transmissions with a wavelength of less than one metre.

In the UK, TV and mobile phone transmissions, and fixed telecommunications links, among others, fall into this category.

Microwave cookers use a very intense source of electromagnetic energy at a 'microwave' wavelength and perhaps it is this fact that has led to the term having negative connotations in other contexts.

The 'Stewart' Report

In response to public concern over the health and safety of mobile phone technology, the Government commissioned a report from an independent group of experts, usually referred to after its Chairman as the Stewart Report. This was published in May 2000.

After thorough consideration of existing research and of extensive evidence submitted to it, the group concluded that:

"The balance of evidence indicates that there is no general risk to the health of people living near to base stations on the basis that exposures are expected to be small fractions of the guidelines."

The report recommends that in accordance with a precautionary approach, the guidelines of the International Commission on Non-Ionising Radiation Protection (ICNIRP) should be adopted in the UK and it is the ICNIRP guidelines to which this statement refers.

The ICNIRP guidelines are made up of two parts, the first being based on established and reproducible science; the second part a safety factor. In this way the guidelines come with a built-in precautionary element.

Crown Castle can confirm that all mobile phone base stations under its control do currently and will in the future comply with the ICNIRP guidelines in all areas accessible to the public.

shaping the wireless world℠

CROWN CASTLE INTERNATIONAL

Version 1.6
November 2001

NRPB Report R-321

One piece of evidence to which the Stewart Group referred in preparing its report, was a recent survey carried out by the NRPB, which took measurements in 118 publicly accessible locations around 17 mobile phone base stations where people were worried about exposure to radio waves.

The 118 locations were chosen to be where the highest power densities might be expected to occur.

The maximum exposure measured at any of these locations was less than one five hundredth of the maximum exposure recommended by ICNIRP.

The average exposure was one fifty thousandth of the ICNIRP level.

Measurements taken in each location were the geometrical mean total from all radio signals at the location, not just signals from the base station of interest.

The NRPB report also confirmed that for all the locations, power density did not tend to decrease as distance from the base station increased. This was because signals from other sources were frequently found to be of similar strength to the signals from the base station under investigation.

Radiocommunications Agency surveys

Following recommendations in the Stewart report, the Government asked the Radiocommunications Agency (RA) to implement a national measurement programme.

The initial focus of the audit has been base stations on school sites and the RA publishes the results on its web site (see box to side for address).

The results of this survey demonstrate Stewart's assertion that actual field strengths from base stations are tiny fractions of the guidelines.

Contribution to research

Crown Castle has carried out its own research and also contributes substantially to independent research into radio safety.

The Stewart Report recommended that further research, to be funded jointly by Government and the industry, be carried out in specific areas relating to the safety of mobile phone transmissions. Crown Castle is making a substantial contribution to this research programme.

Independent advice

The Report of the Independent Expert Group on Mobile Phones (the 'Stewart Report')

Website: www.iegmp.org.uk

The National Radiological Protection Board

The UK's independent statutory adviser on radio safety.

Help line number:01235 831600.

Website: www.nrpb.org.uk

The Radiocommunications Agency

Website: www.radio.gov.uk

The World Health Organisation

Website: www.who.int/peh-emf/

The International Commission on Non-Ionising Radiation Protection

Formally recognised by the World Health Organisation.

Website: www.icnirp.de

Professor of Oncology, Medical College of Wisconsin

A comprehensible Q & A sheet on matters relating to mobile phone base stations:

www.mcw.edu/gcrc/cop/cell-phone-health-FAQ/toc.html

Crown Castle Contact:

Community Relations Manager
Crown Castle International
The Lodge
18-21 Church Gate
Thatcham
Newbury
RG19 3PN

Tel:

(0845) 6014815 (local rate call)

Email:

community.relations@crowncastle.com

shaping the wireless world℠

CROWN CASTLE INTERNATIONAL

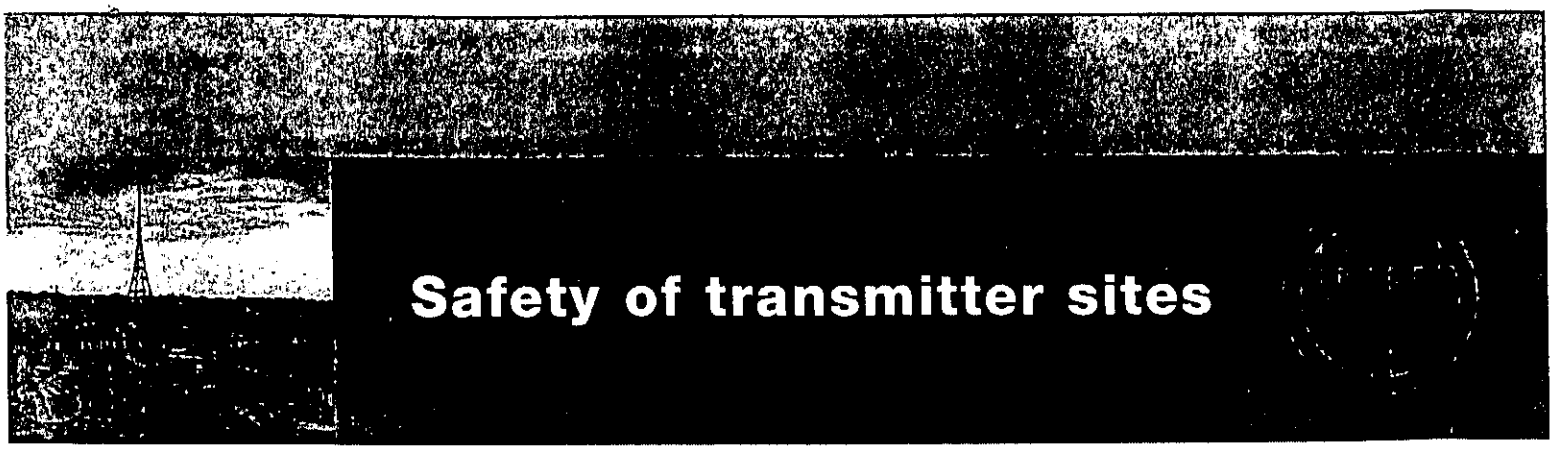

Safety of transmitter sites

Purpose

This information sheet provides a brief summary of the issues surrounding the safety of radio and television transmitters in the UK. It also provides phone numbers and web sites where independent advice can be obtained. You may also wish to read Crown Castle's information sheet 'Safety of Mobile Phone Base Stations'.

Crown Castle International

Crown Castle International is the world's leading independent owner and operator of shared radio communications and broadcast infrastructure. In the UK we own and operate the BBC's network of transmitter stations, as well as large numbers of mobile phone and other radio transmission sites.

Experience

We have experience in acquiring, designing, owning and operating radio sites across the world. Through the BBC Transmission Division, now part of Crown Castle, we have experience of public broadcast transmission in the UK, over a wide range of frequencies and powers, dating back over 70 years.

Health and safety

The health and safety of the public, our customers and employees is, and always has been, of paramount importance to Crown Castle. On the basis of established science and through the application of best practice, we are confident that none of Crown Castle's transmitter sites poses, or has ever posed, a threat to the general well-being or health of the public or of our staff.

Radio technology

Radio has been in widespread use since early in the last century. It is used in a great many different applications, including:

- Public broadcasting
- Public and private mobile radio
- Fixed telecommunications transmission
- Mobile phones
- Domestic cordless phones
- Pagers
- Baby alarms
- Vehicle locking systems
- Home alarm systems - and many others.

All these systems have something in common - they all rely on radio waves.

What are radio waves?

Radio waves are electromagnetic waves. There are many man-made and natural sources of electromagnetic waves - for example visible light, which occurs beyond radio waves in the electromagnetic spectrum.

Radio waves are created by repeatedly reversing the electric current to an aerial.

The radio waves transmit energy from one place to another. By varying the waves, information can be sent over them.

As all waves travel at the same speed (300,000 km/second), the faster a wave's frequency, the shorter each wave's length becomes. Medium wave radio waves, for example, are around 300 metres long, while FM radio waves are about 3 metres long, TV waves vary from about 60 centimetres down to 35 centimetres, and mobile phone waves from about 33 centimetres to about 16 centimetres.

Information is sent over the wave by varying it in one of a number of ways, for example by varying the amplitude (height) or frequency of the wave.

Sometimes the information is encoded and sent as a series of noughts and ones. This is known as digital transmission. Digital transmission can carry more information at higher quality and is used in most mobile phones, some mobile radio systems, and increasingly in public TV and audio transmissions.

Some of Crown Castle's sites carry one type of service, some carry many different services, but they all involve radio transmissions.

Radiation

Radio waves 'radiate' from the aerial, as ripples radiate from a stone thrown into a pond. They are therefore described as 'Radiation'.

shaping the wireless world[sm]

CROWN CASTLE INTERNATIONAL

Version 1.6
November 2001

Ionising and non-ionising

It is very important to distinguish radio frequency electromagnetic radiation, which is 'non-ionising', from the radiations well above visible light in the electromagnetic spectrum, for example X-rays and gamma rays, emitted by radioactive material, which are 'ionising' - that is to say their wavelength is so short and their frequency so high that they can irreversibly change molecular structure.
Ionising radiations are known to cause cancers and other illnesses.

Crown Castle installations do not transmit ionising radiation.

Stringent guidelines

Crown Castle operates under stringent national and international health and safety guidelines. In the UK the National Radiological Protection Board (NRPB) is the independent statutory body responsible for setting health and safety standards with regard to radio transmissions.

Crown Castle can confirm that in all areas to which the public has access, all of our transmitters operate at levels well below the applicable guidelines.

Monitoring sites

All radio waves transmit energy. The amount of energy transmitted diminishes very rapidly with distance from the transmitter, and this means that the amount of energy received in areas accessible to the public is very small, even from our larger transmitters.
Over many years we have carried out audits of power levels at different locations around many of our sites.

Some of these measurements have been undertaken in conjunction with the Health and Safety Executive (HSE).

In all cases the measurements have been below, and often well below, the levels set by the NRPB.

Research

Crown Castle actively participates and contributes to independent scientific research. Indeed, we have recently made a significant contribution to the independent research programme recommended by the Independent Expert Group on Mobile Phones in its report (The Stewart Report).

Independent advice

The National Radiological Protection Board

The UK's independent statutory adviser on radio safety.

Helpline number : 01235 831600.

Web site: www.nrpb.org.uk

The World Health Organisation

Informative fact sheets from an authoritative source:

Web site: www.who.int/peh-emf/

The International Commission on Non-Ionising Radiation Protection

Recognised by the World Health Organisation.

Web site: www.icnirp.de

The Radiocommunications Agency

Is carrying out a continuing audit of mobile phone base stations. Results may be viewed:

Web site: www.radio.gov.uk

Crown Castle International

We would be pleased to discuss issues arising from this information sheet. Please contact:

Community Relations Manager
Crown Castle International
The Lodge
18-21 Church Gate
Thatcham
Newbury
RG19 3PN

Tel:

(0845) 6014815 (local rate call)

Email:

community.relations@crowncastle.com

shaping the wireless world[sm]

CROWN CASTLE INTERNATIONAL

09 APR 2002* 6097

HUTCHISON 3G – A BACKGROUND DOCUMENT FOR LOCAL PLANNING AUTHORITIES

The Company

1. Hutchison 3G is a licensed telecommunications code systems operator. Under the terms of its licence, it is required to establish a completely new network over the UK to provide third generation telecommunications services. Specifically, the licence imposes the following key obligations. First, to provide coverage over an area embracing 80% of the UK's population by 2007; and second to meet the reasonable demands that may be placed upon its network in the future.

What is Third Generation?

2. The licence granted to Hutchison 3G is one of five new licences to establish networks, in competition with each other, for third generation services or Universal Media Telecommunications Services (UMTS). Hutchison 3G is the only new entrant in the mobile communications sector, the other four licences having been granted to the existing operators, who already have established networks.

3. The first generation networks used analogue technology and were only capable of voice transmission. These networks are being phased out of service.

4. The second-generation networks, which represent the current systems use digital technology. In addition to voice transmission, the second-generation networks can also carry data, but the capacity of the systems is limited. Hence, data links can be slow which limits their performance. Customer numbers are now over 43 million and so mobile telephony now exceeds fixed lines in terms of both usage and numbers. It is therefore the most significant form of telephony and that will continue with third generation services.

5. The third generation networks will also use digital technology, but in an enhanced form, which will give far greater capacity to carry high volumes of data and for the first time visual media. This will bring into reality videophones, proper Internet access and a whole range of other services incorporating moving images.

6. The potential range of services is almost limited only by one's imagination. The Hutchison 3G network will have at his heart services that link customers to local facilities, including shopping and entertainment. Thus, for example, a customer will be able to access information on films being shown at a local cinema and to book and pay for tickets through the use of a hand-held phone.

7. These services will greatly enhance personal convenience and security. In addition, they will further the already significant contribution made by mobile communications towards achieving economic and sustainable objectives. These form the foundation of current government policy, which is one of encouragement. An illustration of common benefits, following a review of the UK context, is set out below under the following three categories, although they are not mutually exclusive or exhaustive:

- Local benefits.
- Contribution to sustainability.
- Contribution to national economy.

The Benefits of Modern Telecommunications

The UK Context

8. The huge significance of modern telecommunications just in terms of its direct contribution to the UK economy is recognised in the DTI White Paper - *Our Competitive Future*, published in 1999. This states at paragraph 4.21:

> "*Our communications infrastructure underpins much of the economy. Radio based services alone contribute over £13 billion a year to GDP and provide over 400,000 jobs.*"

9. Taking the mobile sector alone the growth has been phenomenal. Just as recently as 1997/8 there were only just over 9 million mobile customers. Now there are over 43 million subscribers, and new subscribers are joining by around 45,000 every week. Mobile telecommunications is now a key element in society and the economy and that will remain so in the future, with businesses and individuals looking beyond their convenience to actual reliance.

10. However, the use of modern telecommunications should not be considered in isolation to the mobile phone, Internet access has also shown similar trends. As at May 2001, 10 million homes had Internet connections, with over 4 million of these connections being made in the preceding twelve months. It should also be noted that nearly 60% of the connections were home based, with only 16% accessing at work. Such figures illustrate that the impact of telecommunication advances is not only felt within the business sector, but also in the home environment.

11. The longstanding policy of UK Government to encourage modern telecommunications is therefore beginning to make significant changes in the way in which we live and work, but we are only at the beginning of the communications

revolution. This is evident from changes on the horizon and the evolution of UK Government policy.

12. The UK Government's commitment to modern communications clearly continues, as is evident from the auction held in 2000 for the five new licences for the Third Generation (3G) or Universal Mobile Telecommunications System (UMTS).

13. That said, policy has evolved further with the **UK Government adopting as one of its core objectives to make sure that the UK is the best place in the world to carry out electronic business by 2002**. In order to achieve that objective, the Government recognises that modern communications is the fundamental bedrock.

14. For the UK economy and society the communications revolution is set to take off with the advent of 3G services.

15. To put these into perspective, the 1G mobile networks operated by Vodafone and BT Cellnet used analogue technology that could only handle voice traffic, and was often poor in quality.

16. The 2G services, now offered by Vodafone, BT Cellnet and Orange and One2One, provide some data capacity as well as voice. However, in the main, that data capability is limited and slow, compared to what is available through fixed lines.

17. As explained above, the 3G services will provide far greater data capability and for the first time, fuse also visual media, facilitating full Internet access and video, whilst on the move. The leisure and business applications associated with this technology are huge and limited only by our imaginations.

18. Without doubt as these services become commonplace, they will bring about a revolution in the way people manage their working and family lives. Taking for example, the failure in policy in creating proper transport choices to greatly influence travel modes and where people live and work, mobile communications will rapidly give real choice to widespread members of the population. It will therefore be through the communications revolution and not transport measures, that the biggest contribution to sustainable objectives will be met. This is because to date transport measures have often provided unrealistic choice and involved greater cost and inconvenience to many potential users. In addition, the whole approach has been rooted in changing peoples transport mode, rather than encouraging them not to travel at all, as will be possible to an increasing extent through modern communications.

19. That is where the future lies. But, **every telephone conversation, every e-mail, every facsimile, every surf on the Internet, every interactive shop completed on cable television, every palm top link has to and will continue to have to be routed through a complex electronic chain, necessitating the use of telecommunications installations throughout the UK. As usage grows and new technology is implemented, so the number of installations will therefore have to grow.**

20. This document is to help local planning authorities understand why the inevitable impact of telecommunications development is perceived by UK Government to be far outweighed by its considerable benefits.

21. National policy as indicated in PPG8 reflects UK policy. Its broad objective is to encourage modern telecommunications as being an essential and beneficial element in the life of the local community and in the national economy; and of benefiting the environment through reducing the need to travel.

The Local Benefits

14. The ability of local businesses to operate and compete effectively through access to modern communications can help maintain and increase local employment opportunities. This is particularly significant in the rural areas, which even in the best economic times can still suffer from pockets of poor opportunity. For example, in the islands of Scotland, craft workers can receive orders to make individual knitting patterns over broadband lines, from anywhere in the world.

15. Local service providers such as doctors, vets, deliverymen and local tradesmen, like electricians and plumbers, place increasing reliance on mobile communications. Their ability to provide a more responsive and flexible services benefits local communities.

16. **Mobile phones save lives** – most calls to the emergency services following road accidents are placed immediately after the incident on mobile phones. This enables the fastest possible response by the emergency services to bring lifesaving paramedic treatment to victims. As treatment within the short period after a traumatic accident can be the difference between life and death and permanent disability and recovery, this is a very considerable benefit to society. With the advent of 3G services that will facilitate live video links with hospitals for instant advice from specialist medical trauma teams, the life saving potential will be even greater.

17. Access to mobile communications can also bring about greater personal freedom of movement and convenience. To illustrate this, most people would agree with the following statements:

- If my car broke down or I was in a road traffic accident, then I would like to be able to call a motoring organisation or the emergency services immediately.

- If my teenage children were out late at night, I would feel less anxious if I knew they could contact me by telephone wherever they are.

- If I left my children with a baby-sitter at home or an elderly relative for whom I am caring; I would feel more reassured if they could contact me at any time by telephone, wherever I am.

- If I was running late to see someone, or had to change my plans, I would like to be able to contact them to let them know.

- If I left my home or office and forgot something, I would like someone to contact me to tell me so I could return and pick it up.

- If I was away from my home or office and had to contact someone urgently or receive an urgent message, I would like to be able to do so immediately.

Contribution to Sustainability

18. Mobile communications includes messaging, faxes and data transference (via the use of modems and computers) and accessibility to them is changing the way in which we live and work. As indicated above, the next generation of services will link these with video and television services and a range of new electronic tools and products will be available to maximise their use.

19. Likewise, fixed communications are also converging with, for example, home shopping, Internet access and e-mail now being available through cable and digital television services.

20. At its simplest, the creation of local job opportunities and full or part time home working, facilitated through access to modern communications help reduce the need to travel. Likewise, being in constant communication can avoid wasted journeys. For example, a business person travelling between locations can receive a message that it is unnecessary to go to one of the planned locations if circumstances change; or faxes or electronic mail can be received or sent, from a car without the person having to return to their office.

21. At its more complex, mobile communications facilitate modern forms of working such as hot desking and hotelling, so reducing and in some cases eliminating the need for office accommodation. As these modern working practices gain greater hold, so the demand for office accommodation should reduce, and ultimately alleviate the pressure for such development, so making a major contribution to sustainable objectives. In addition, by reducing the number of commuters, the pressure on all forms of transport and the consequential road congestion often experienced during peak hours should be reduced, leading to clear environmental benefits.

22. The potential impact of modern telecommunications is particularly evident when contrasted with the obvious failure in transport policy to reach its stated objectives towards achieving more sustainable patterns of living and working.

23. Presently, motor traffic is the major source of environmental pollution and "Greenhouse gases". At the same time, road building damages the environment

through its land take and destruction of habitat and its voracious use of non-renewable resources.

24. The main polluting emissions from motor vehicles are not falling fast enough to ensure that statutory air quality standards for particles, nitrogen oxide and ozone are met by the Government's target date of 2005. This and the need to build over 4.4 million new homes in the next decade will result in tremendous strain on urban networks and intensified road building programmes. Whilst UK Government policy is towards the better use of brown field sites, to help minimise the use of green field sites, the Highways Agency has still stated that studies show at least 60 SSSI's are under serious threat due to proposed road infrastructure schemes.

25. The policy on encouraging "modal shift" – that is getting people to change their mode of travel, especially work-related travel, in favour of more sustainable patterns is also failing to produce meaningful results. In a society that gives individuals freedom of choice and where mobility in the workplace is a growing trend, it is unlikely to.

26. By contrast, flexible work practices such as homeworking and telecommuting facilitated through broadband connections, the Internet and mobile phones are now realistic choices for many for some, if not most of the time. This can help reduce commuting dramatically and where travel is necessary avoid peak hours, so making better use of transport infrastructure and reducing congestion.

27. Unsurprisingly, the UK Government, in its aim to achieve sustainability, is now enlisting the help of IT and telecommunications companies in a quest to reduce traffic, pollution and congestion. The following further illustrates how the new information and communication technologies can assist in the aim of achieving sustainability:

- **Working from home reduces rush hour traffic**

  71% of the 17 million strong workforce in the UK travel to work by car, with only 3.8% working from home or non-office based locations. These figures combined with government predictions of a 19% increase in CO2 emissions attributable to transportation over the next ten years highlight that any policy centred on "modal shift" will fail.

  By contrast, eliminating some commuter trips altogether by even occasional homeworking has the potential to make a significant impact in reducing peak hour travelling. A Review of Telework in Britain (1995), commissioned by the Parliamentary Office of Science and Technology, reported that " *the best available estimates for the UK suggest that home-based teleworking reduced total UK miles by some 1% in 1993 and that the long term potential is for some 5% to 12% of total car use to be substituted by telecommuting*". This was a cautious

estimate at the time and made before the current technologies now emerging in the telecommunications sector were known or available.

Evidence also exists to demonstrate that fewer business related journeys are not offset by greater leisure or private vehicle movements. In fact, two studies demonstrate the opposite is true. One, the California State Employee Telecommuter Pilot Programme showed that on average teleworkers reduced trips by two per day, with evidence to suggest that family members also reduced the number of non-work trips made. The other, which is an ongoing study in the Netherlands, illustrates that teleworkers reduce their car trips by 17% and this has helped to reduce peak hour travel by 26%.

- **Working at local centres help 'multi site' staff**

  Telecommunications also help breakdown conventional office structures, with less need for staff to be collocated in a major city, for example. Such structures militate against attempts to reduce travel, but working from local offices helps reduce commuter miles. Monitoring at Surrey County Council's Epsom telecentres, where this concept is applied, found that users reduced the length of their commute journey on average by 19% and its duration by 36%, reflecting the effect of congestion on their normal journey to the base of the office.

- **Replacing business travel with electronic communication**

  A study by the RAC projects that by 2007 videoconferencing will cut business travel by 20%. In addition, routine electronic sharing of information by email, electronic data interchange and the use of intranets and the Internet all reduce the need to travel to meetings by eliminating or reducing the need to meet to exchange information and opinions.

  Increasingly also, diagnostic and monitoring activities can also take place over electronic telecommunications networks. This allows instant response, cuts travel and boosts productivity.

- **Working on the move**

  In the UK over 30% of the workforce travel as part of their job. For these workers unnecessary travelling and much greater efficiency can be introduced by using laptops and remote technologies from home, from telecentres and "touchdown" sites. The business mileage of such workers may be reduced in two principal ways. Firstly, facilitating work almost anywhere can eliminate repetitive journeys to offices. Secondly, after initial meetings, the establishment of online working with partners, contractors and customers can help reduce visits.

28. It is also important not to overlook that more sustainable work patterns deliver a range of other significant benefits, some of which are listed below under sub-headings:

Benefits to employers

- Employers who allow flexible working practices often find increased levels of productivity, and have a happier workforce with less absenteeism
- Business mileage is also shown to decrease.
- Significant savings are made in energy, as only essential office space will be required.
- Office accommodation requirements can reduce.

Benefits to employees

- Access to work is made more available for all that is of especial benefit to the disabled, single parents and carers. This helps also feelings of contributing to society.
- Reduced costs of otherwise expensive commutes.
- Studies into flexible working in the UK have shown reduced stress levels within the family unit as a whole and greater satisfaction felt as a family.
- Whilst studies have only been executed on a small scale, reports show that flexible workers are less likely to visits their doctor for stress, against a rising trend of such visits.

Direct benefits for the community and environment

- On average approaching 4,000 people die and 45,000 are seriously injured on UK roads each year, the majority of which occur during rush hour traffic. Reduced commuter trips should help reduce accident levels.
- Pressure in areas requiring improved transport infrastructure will be reduced through less commuter trips.

- Pressure on housing in traditional commuting areas that surround cities should be alleviated in the long term.
- Dormitory commuter towns and villages should be revitalised with increased vibrancy and demand on local services during the day.
- Local business would benefit, such as pubs and small shops.
- People who work within the community are more likely to participate in the community and have time to take up roles such as school governors or magistrates.
- Reduced levels of car travel reduce air pollution.
- Reduced levels of air pollution may help with reduction in number of new cases of asthma. The National Asthma Audit estimates 3.4 million people in the UK are asthmatic. Of these, 1.5 million are aged between 2-15.

Contribution to the National Economy

29. All businesses, from large to small, benefit from modern communications that helps them maintain and attract new business and service contracts in a responsive and competitive manner.

30. In addition, telecommunications is an increasingly important sector of the economy in its own right. Many thousands of people are now employed throughout the UK directly by telecommunication companies; and by companies which specialise in the manufacture of telecommunications equipment, from handsets to radio masts to sophisticated electronic equipment. In the year 2000 alone, Treasury gained a windfall of over £22 billion in licence fees and the major telecommunications companies, some of which are less than ten years old, now comprise a significant part of the FTSE100.

31. Future predictions suggest over the next 5 years the percentage of the population owning a mobile phone will represent 83% (with some customers having dedicated equipment for data purposes as well as for voice, similar to households that now have two fixed lines, one for voice, the other for Internet access). Internet usage and digital and cable television subscriptions will also increase. By 2010, trends indicate that the telecommunications industry will contribute over £214 billion to the GDP and employ in excess of 519 000 people.

32. Such estimates do not reflect the many people involved in the sale of mobile and other telecommunications equipment, often operating from dedicated high street shops.

33. Likewise, such estimates do not quantify the savings to consumers brought about by modern communications, now available through an increasing range of products and services being sold by way of direct marketing, such as telephone banking and insurance.

34. Overall, the significance of modern telecommunications to the national economy can be viewed like this. Any economy that does not have world class communications in the future, will not by comparison be efficient, competitive or modern and the principle reasons for inward investment would be likely to exploit cheap labour, cheap land and/or weak regulations. Local planning authorities have a role to ensure no part of the UK is left behind.

References

Toshiba (2001) "The Complete Guide to Flexible Working"

ONS (2000) "Annual Abstract of Statistics"

ONS (2001) "Social Trends" Number 31

UKOnline for Business (2001) "Mobile Communications and E-Mail"

DETR (1997) "Assessing the Impact of Advanced Telecommunications on Work-Related Travel"

www.Flexibility.co.uk (2000) "Telecommuting 2000 – The Future of Transport in the Information Age"

ECATT (2001) "Keeping a watch on the world of e-Work"

OFTEL (2001) - Press releases 8 July 2001

MTAG (2001) "Mobile Phones and Base Stations"

DETR (1999) "Transport Statistics – Travel to Work"

HOW THE 3G SYSTEM WORKS

1. The third generation network being established by Hutchison3G also utilises cellular technology and its operation depends upon the development of telecommunications infrastructure. Like all forms of infrastructure, there is an associated degree of environmental disbenefit and with telecommunications this is generally the visual aspects of such development. However, the overall benefits of modern telecommunications, encouraged in the public interest are so great that some local disbenefits are an acknowledged fact of having such systems. That said, planning policy and the operators licences quite rightly seek to ensure the associated disbenefits are kept to an acceptable minimum.

2. This balancing of factors in the public interest is no different from that which applies to other forms of communications infrastructure. For example, it is generally acknowledged that it is beneficial to have a modern and efficient railway system and that is now being encouraged in planning policy as a means of also helping to achieve sustainable and economic objectives in the national interest. That is notwithstanding the environmental disbenefit of operating railways, which includes a significant land take for tracks and stations and the noise, fumes and disruption associated with the operation of services.

3. It is arising out of the special problems and technical needs associated with telecommunications development that installations, which can be visually prominent, are appearing in high numbers throughout the country. These factors are explained in more detail below.

Mobile Communications Networks

4. The rationale behind all Mobile Communications Networks is that most communications are between individuals rather than offices or homes, where telephones using conventional landlines are usually found. Thus, when an individual is away from the home or office, communication can be frustrated. With a Mobile Communications Network, an individual can be contacted wherever he or she is, provided that is within an area of adequate coverage.

5. It is this roaming aspect of the system that makes it so flexible and when linked to computer systems and visual media will be so especially versatile. But these features and their associated benefits can only be realised through the development of a comprehensive network. The full development of the Hutchison 3G network should also allow real choice to customers between networks and in providing a genuine alternative to conventional telephones using landlines. Thus as indicated above, Hutchison 3G is required under the terms of its licence to provide both geographical coverage, and to meet the reasonable demands likely to be placed upon

the systems. Inevitably demands will grow and change over time and have large implications on the quality and capacity of the network.

6. In creating the network, the cellular technology means the establishment of a series of overlapping cells, which will vary in size, depending on likely levels of usage and the topography of the area. To ensure proper mobile communications, the cells will have to form an almost unbroken patchwork over the country.

7. The cells will be operated by a Radio Base Station, to which individual handsets will be linked by radio wave transmission. As a customer moves from one cell to another the calls will automatically be transferred or "handed over" to ensure continuous communication. If adjoining cells do not overlap then this process of handing over would fail and a call would be dropped, one of the most frustrating aspects of mobile communications.

8. Having regard to operational matters, there are four main influences on the choice of siting for new Radio Base Stations.

9. First, at a general level, sites should have the following attributes:

- They must be capable of being developed.
- They must have reasonable vehicular access.
- They must be supplied or capable of being supplied with power.
- They must offer or be capable of offering a reasonable degree of security.

10. These factors tend to influence localised siting decisions, but second, all new installations must fit into the national network being planned and established. Thus, Radio Base Stations will usually have to be located towards the middle of the target cell area. As the interval between installations will be small, this constraint will limit flexibility on siting choice.

11. Third, in order to be able to operate effectively the antennae which transmit and receive to and from customers must be clear of trees and high buildings which might have the effect of attenuating or even blocking the signal.

12. Where radio dishes are required, the fourth influence is the need to obtain direct line of sights to corresponding installations on the network. Siting may therefore be guided by the need to avoid an intervening hill or a row of trees which might block the line of sight required, the alternative being an unacceptable tower height to clear such obstacles.

13. It is because of these factors that NPPG 19 and PAN 62 explains the special needs and technical problems of telecommunications development and to avoid the

unnecessary refusal of proposals on the basis of policies framed in terms of conventional buildings and land use.

14. However, as also pointed out in NPPG 19 and PAN 62, there are differences between 2G and 3G networks that have land use planning considerations. To assist we explain these further below.

What are the Key Differences Between 2G and 3G and their Land-Use Implications?

15. From a planning authority's perspective, the key differences and land use implications, between the way in which a 2G and a 3G network operate, can be summarised as follows:

- **The 3G cells will expand and contract, or breathe, with usage. The operational cell coverage area for 3G will therefore be less than for 2G.**

  In simple terms, this means more sites. Just how many is difficult to estimate. At present there are over 22,500 sites with one or more mobile base stations on them.

  The operators estimate that by 2003, this figure will have increased to around 50,000, with possibly up to 9,000 of the addition, being new radio masts. That date however only takes one just beyond projected launch, i.e. when the networks will be very immature.

  Paragraph 34 of NPPG 19 suggests the figure could rise to 80,000 throughout the UK, others have suggested 100,000.

  No one knows for sure what the final figure will be. What is known is that every forecast for 2G has been wholly outstripped by what has happened in practice. For example, when Orange launched its 2G services in 1994, it had less than 1,500. The figure is now climbing towards 10,000.

- **A dense network means not only large numbers of sites, but much more severe siting constraints, as the flexibility to move geographically will be greatly constrained by the close proximity of existing installations.**

  Search areas for alternative sites will therefore be over a very small radius, dropping down to tens of metres as the networks develop.

- **A dense network also means that height will not be such a key requirement.**

  Rooftop installations on high buildings may not therefore be suitable locations. This is because base stations located on them could spill into nearby cells operating at the same frequencies, thereby causing interference.

- **Greater miniaturisation of equipment is possible.**

  This should assist greater assimilation in townscapes and landscapes and maximise sharing opportunities. However, the antennas will still have to "see" over their coverage areas.

- **Access to high capacity optical fibre networks will be critical.**

  This is a new constraint and within the industry the issue is often referred to as "backhaul".

  Local authorities will by now be familiar with the principles of how a base station operates. In simple terms, an array of sector antennas (usually vertical structures) provides coverage over the cell areas to customers.

  To control the base station and to provide links with other telecommunications networks a link is required to a base station control site and a mobile switching centre. This is usually through fibre optic cables (mainly confined to the main conurbations) or transmission dish antennas.

  Where transmission dish antennas are used a link can be provided along a series of installations like a daisy chain. The possible numbers along that relay chain for 2G tended to be restricted through concerns about losing large numbers of calls if a link in the chain failed.

  For 3G this relay chain principle is not possible to the same extent and only one or two links can be achieved. This is because the networks operate at such high capacity, the link to the base station control and switch centre, has to be carried through high capacity optical fibre networks.

  Such access exists or is readily capable of being provided to existing large telecommunications installations and BT Exchanges. **Existing large installations and BT Exchanges, such as the ones owned or controlled by Crown Castle are therefore viewed as critical by Hutchison 3G in rolling out and achieving the early launch of its**

network. In the case of the BT Exchanges these especially have the added benefit of being located within or close by large numbers of potential customers, the very place where base stations need to be located in order to work effectively.

Hutchison 3G

Declaration of Conformity with ICNIRP Public Exposure Guidelines ("ICNIRP Declaration")

09.APR.2002* 6097

Hutchison 3G UK
Star House, 20 Grenfell Island
Maidenhead, SL6 1EH

Certifies that the proposed equipment and installation as detailed in the attached planning / GPDO application at:

Ducks West Farm
Eversley Road
RG2 9PJ

Nominal ID:	**RG4010**
Candidate ID:	**00007534**
Drawing No:	**17446.2.001/6**
Issue No:	**6**

is designed to be in full compliance with the requirements of the radio frequency (RF) public exposure guidelines of the International Commission on Non-Ionising Radiation Protection (ICNIRP), as expressed in EU Council recommendation of 12 July 1999 * "on the limitation of exposure of the general public to electromagnetic fields (0Hz to 300 GHz)".

* Reference: 1999/519/EC

Date: **10-Dec-2001**

Signed By:

Name: TAK CHUNG HOO

Position: RADIO PLANNER.

Hutchison 3G

RG4010

10-Dec-01

Planning Officer
Address
Council Offices
Main Street
City or Town

Dear Sir/Madam,

RE: Declaration of ICNIRP compliance - Ducks West Farm

I refer to the Declaration of Conformity with ICNIRP Public Exposure Guidelines ("ICNIRP declaration") forwarded to you on behalf of Hutchison3G in relation to the proposed telecommunications facility at the above-mentioned address.

Hutchison3G provides the "ICNIRP Declaration" pursuant to Government recommendations (NRPB ref. B2170). Please note that the "ICNIRP Declaration" attests that the site is designed to be in full compliance with the requirements of the radio frequency (RF) guidelines of the International Commission for Non-Ionising Radio Protection (ICNIRP) for public exposure as expressed in EU Council recommendation of July 1999.

The ICNIRP certificate produced by Hutchison3G takes into account the proposed radio frequency exposure for the Hutchison3G telecommunications facility and all existing operators present onsite; BT Cellnet and/or Vodafone and/or One 2 One and/or Orange.

The radio emission compliance calculation is based upon 'worst case' cumulative values as established by the inter-operator methodology outlined in documents FEI/MTAC/RFCG/28/2000 and 49/2001.

If you have any further enquiries concerning the ICNIRP certificate or the certification process please do not hesitate to contact me on 01628-765 000.

Yours sincerely,

Mark J Navolio
Radio Emission Compliance Specialist
Hutchison 3G - National Team
Star House
20 Grenfell Road
Maidenhead SL6 1EH

Emissions Profile

Hutchison 3G

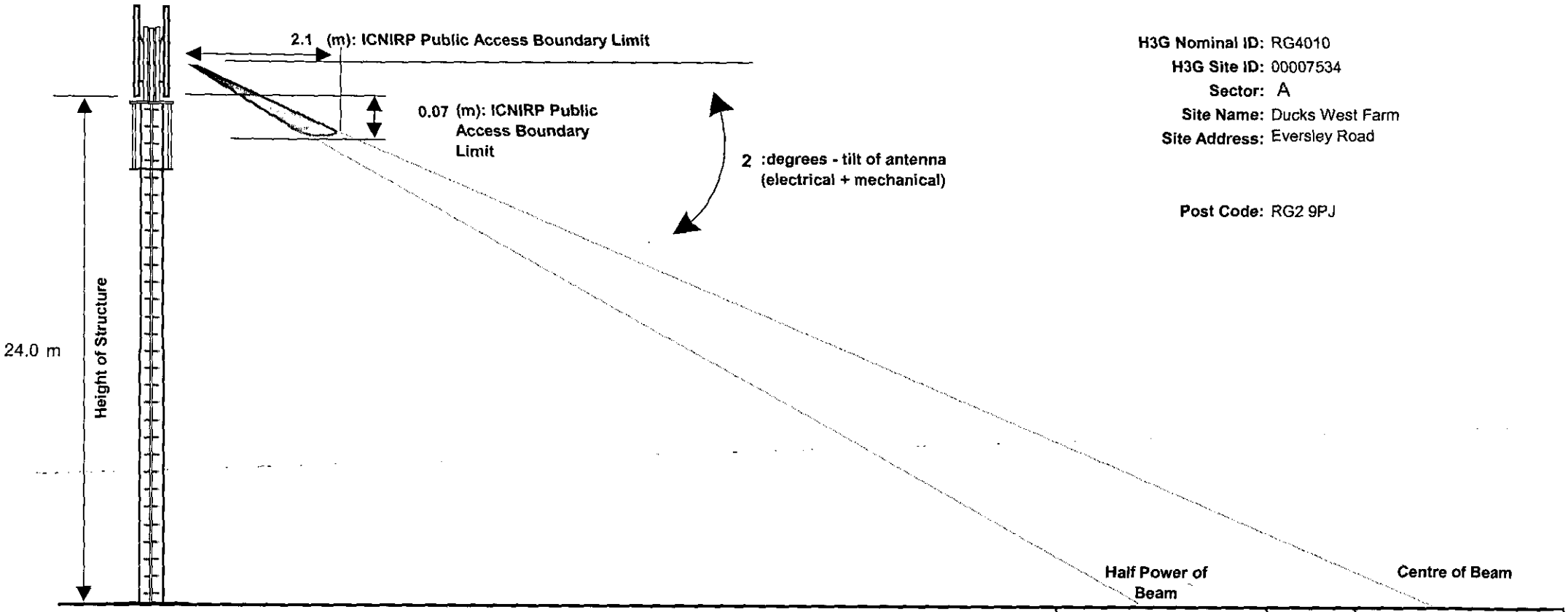

H3G Nominal ID: RG4010
H3G Site ID: 00007534
Sector: A
Site Name: Ducks West Farm
Site Address: Eversley Road

Post Code: RG2 9PJ

0.001238 W/m²
8,078 x less than ICNIRP Standard
0.68 V/m

0.000534 W/m²
18,724 x less than ICNIRP Standard
0.45 V/m

The above structure is solely used for demonstration purposes and is not intended to reflect the actual appearance of the site. The drawing is not to scale.

This theoretical model estimates the worst case emissions based on the proposed configuration. The model assumes optimum propagation and no attenuation due to trees, buildings or other obstructions. Hutchison 3G reserves the right to change this configuration for operational reasons.

The calculations have been completed in accordance with the Stewart Report guidelines [ref. 4.30-4.36].

Emissions Profile

Hutchison 3G

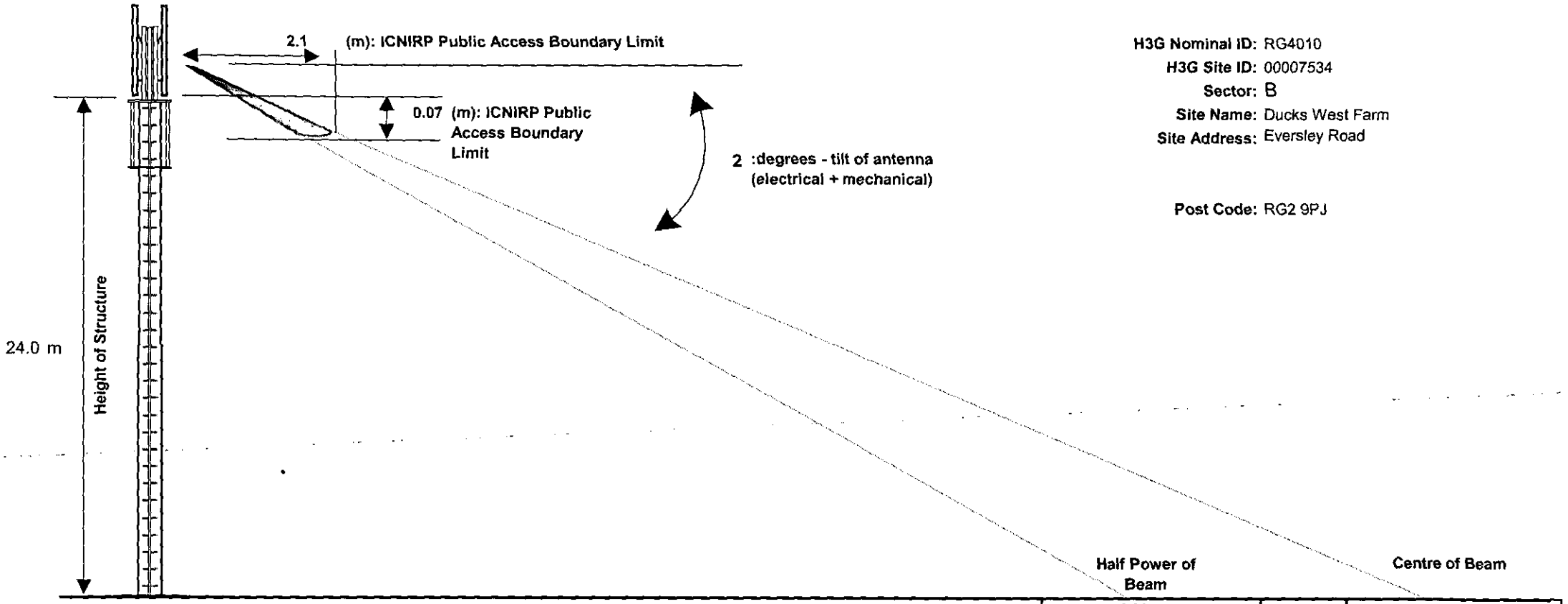

H3G Nominal ID: RG4010
H3G Site ID: 00007534
Sector: B
Site Name: Ducks West Farm
Site Address: Eversley Road

Post Code: RG2 9PJ

0.001238 W/m²
8,078 x less than ICNIRP Standard
0.68 V/m

0.000534 W/m²
18,724 x less than ICNIRP Standard
0.45 V/m

The above structure is solely used for demonstration purposes and is not intended to reflect the actual appearance of the site. The drawing is not to scale.

This theoretical model estimates the worst case emissions based on the proposed configuration. The model assumes optimum propagation and no attenuation due to trees, buildings or other obstructions. Hutchison 3G reserves the right to change this configuration for operational reasons.

The calculations have been completed in accordance with the Stewart Report guidelines [ref. 4.30-4.36].

Emissions Profile

Hutchison 3G

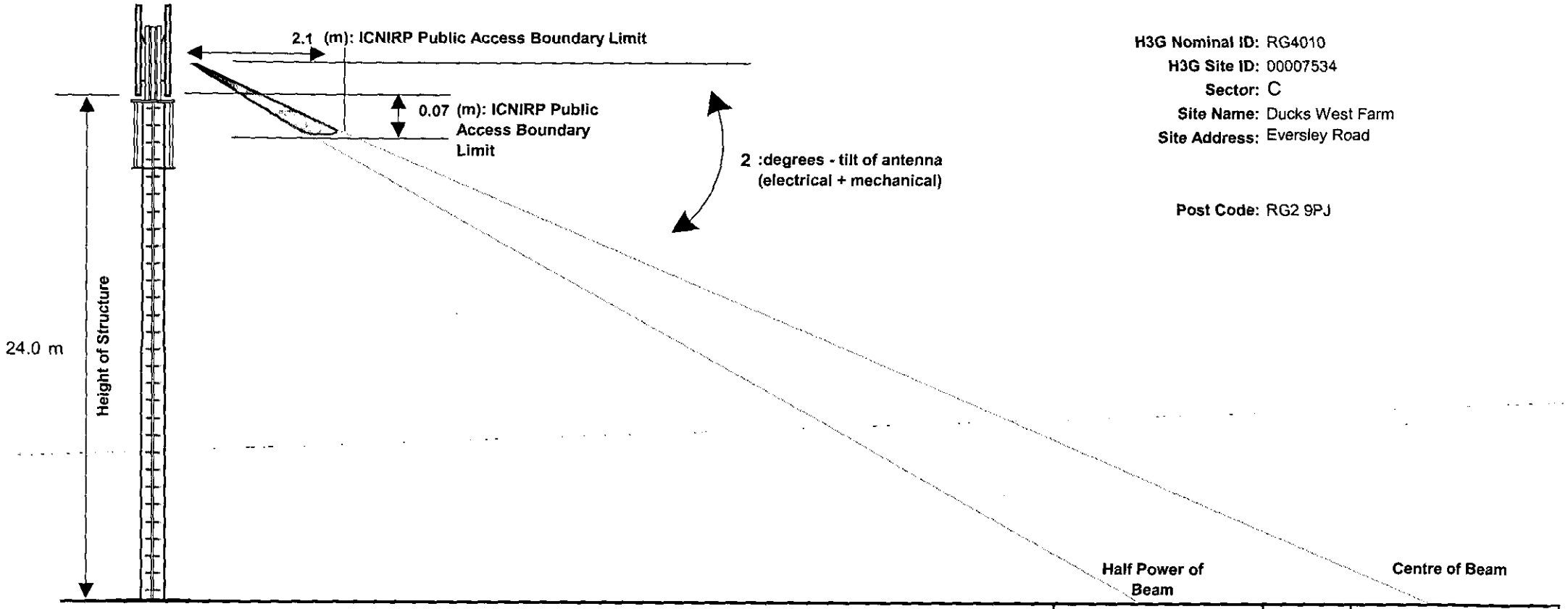

H3G Nominal ID: RG4010
H3G Site ID: 00007534
Sector: C
Site Name: Ducks West Farm
Site Address: Eversley Road

Post Code: RG2 9PJ

0.001238 W/m²
8,078 x less than ICNIRP Standard
0.68 V/m

0.000534 W/m²
18,724 x less than ICNIRP Standard
0.45 V/m

The above structure is solely used for demonstration purposes and is not intended to reflect the actual appearance of the site. The drawing is not to scale.

This theoretical model estimates the worst case emissions based on the proposed configuration. The model assumes optimum propagation and no attenuation due to trees, buildings or other obstructions. Hutchison 3G reserves the right to change this configuration for operational reasons.

The calculations have been completed in accordance with the Stewart Report guidelines [ref. 4.30-4.36].

HEALTH AND SAFETY INFORMATION -ENGLAND

Introduction

1. This document provides information on health and safety, and the related issues of the perception of risk, the precautionary principle as found in the Maastricht Treaty and human rights.

2. This document seeks to place these issues in their appropriate legislative and policy framework, to help the decision maker understand and have the relevant information to be able to approve the application, confident that it fulfills the relevant criteria related to these issues.

Background

3. In view of the high level of public interest on health and safety associated with mobile phones, the Department of Health set up the Independent Expert Group on Mobile Phones (IEGMP) under Sir William Stewart. The IEGMP undertook a full review of all research on the subject relating to both thermal and non-thermal effects and received oral and written evidence from a large number of interested persons. This included evidence from scientists who have been at the forefront of bringing to public attention potential concerns associated with alleged non-thermal effects, such as headaches, sleep disorders, epilepsy and leukemia.

4. The IEGMP's report was made public on 11 May 2000 and the government published its response on the same day.

5. The main finding of the IEGMP was that the balance of evidence to date suggests exposure to radio frequency radiation within current guidelines issued by the National Radiological Protection Board (NRPB) does not cause adverse health effects to the general population; but more research should be undertaken.

6. In the light of this finding, a precautionary approach was recommended, as encapsulated in the recommendations of the IEGMP. In its response, the government has accepted that a precautionary approach should be adopted as recommended by the IEGMP.

7. A key element of the recommended precautionary approach was the adoption of the guidelines issued by the International Commission for Non-Ionizing Radiation Protection (ICNIRP). Accordingly paragraph 98 of the Supplementary Guidance to PPG8 - *Telecommunications* clearly indicates that it should not be necessary for a local planning authority, in processing an application, to consider the health effects further.

8. Indeed, as existing health and safety legislation falls under the responsibility of the Health and Safety Executive (the HSE), and paragraph 94 of the Supplementary Guidance to PPG 8 clearly indicates it is not for local planning authorities to seek to

replicate those controls through the planning system. This applies therefore the usual principle of non-duplication between controls.

9. **PPG8 goes on to clarify in paragraph 101 of the Supplementary Guidance that local authorities should not introduce a ban or moratorium on the construction of mobile phone masts or insist on minimum distances between new telecommunications development and existing development.**

Certification of Compliance with the ICNIRP Guidelines

10. Under the ICNIRP guidelines there is a requirement for a safety exclusion zone (the ICNIRP Exclusion Zone) to prevent unauthorized or inadvertent access into the area where radio frequency emissions might be in excess of the guideline thresholds. This is because it is only **inside** the ICNIRP Exclusion Zone that scientific research (that has taken place over many years into both thermal and non-thermal effects) confirms that exposure (usually long term) could bring about biological effects harmful to health.

11. The ICNIRP Exclusion Zone generally ranges from 2.5 metres to a maximum of 8.5 metres from the face of the antennas, i.e. projecting at the same height of the antennas at their proposed position on the structure. The extent of the ICNIRP Exclusion Zone can vary dependent on the antenna type, frequency, modulation characteristics and power output, which differ between operators and different types of installations.

12. Whatever the extent of the ICNIRP Exclusion Zone for mobile communications equipment installed on a Crown Castle International site, it will not be accessible to any member of the general public. For employees or contractors visiting the site to work on the structure and/or antennas, clearly defined warning signs and physical barriers will exist to prevent inadvertent access to areas that might be within the ICNIRP threshold.

13. In all areas accessible to the public, the equipment on existing Crown Castle installations already complies with the applicable guidelines.

14. **Certification can therefore be given that new equipment on existing installations or additional installations proposed for mobile communications will comply with the guidelines adopted by ICNIRP in all areas accessible by the public. Therefore, the proposed equipment and installation as detailed in the application is designed to be in full compliance with the requirements of the radio frequency public exposure guidelines of ICNIRP, as expressed in EU Council recommendation of 12 July 1998 on the limitation of exposure of the general public to electromagnetic fields (0 Hz to 300 GHz).**

15. To illustrate this, two desk-top radio frequency assessments have been calculated and are illustrated on the attached diagrams. These both portray a ***"worst case"*** scenario carried out at 10 and 15 metre heights, based upon the following assumptions that are so extreme, they would impossible to replicate in practice:

- Six operators transmitting from a single antenna, and therefore also on the same bearing and downtilt.

- Simultaneous and continuous transmission by all six operators at maximum power output.

- The direct transmission signals are focused to give the maximum exposure levels.

- All signal reflections have a maximum value and add to the direct signal.

- The electrical and mechanical downtilts are set to give the maximum readings across the 200 metre range.

16. From these diagrams it is evident that even under these extreme assumptions, the ICNIRP Exclusion Zones, although much greater than in reality, would still not be accessible by the general public.

17. The height differences shown indicate the greater degree of compliance with the ICNIRP guidelines that occurs as equipment is installed at greater height.

18. The radio emissions from the equipment proposed will be considerably less than under these "worst case" scenarios and so demonstrably within the ICNIRP guidelines.

19. This is additionally illustrated by an independent audit carried out by the National Radiological Protection Board (NRPB) on 17 mobile phone base stations and supplied as evidence to the IEGMP (NRPB Ref: NRPB R321). This recognizes that actual readings taken from sites are usually much lower than from desktop assessments, which do not usually adopt such extreme assumptions.

20. Thus, the NRPB found that the highest measured public exposure from radio frequency transmissions was actually 0.2% (one five hundredth) of the ICNIRP guidelines, while typical average exposures were actually 0.002% (one fifty thousandth) of the guidelines. The proposed equipment will have the same or very similar operating characteristics as all mobile phone base stations and this provides further independent evidence that it will operate well within the ICNIRP exposure guidelines.

21. Random auditing of sites, as recommended by the IEGMP, is now carried out by the Radiocommunications Agency. The initial audit findings of actual readings taken from existing installations on or near schools can be examined on the Radiocommunications Agency website. These reveal most recordings to be within the guidelines by a factor of several thousand.

Public Perception of Risk

22. As a matter of law, the public perception of risk, even if based on unsubstantiated concerns, is a material planning consideration. However, as a matter of national policy, it is not generally something to which any significant weight should be attached. This is clear from the long-standing guidance found in Annex 3 of Circular 8/93. In giving guidance on examples of unreasonable refusals of planning permission, Paragraph 15 clearly indicates:

> *"Planning authorities are expected to consider the views of local residents when determining a planning application. Nevertheless, local opposition to a proposal is not, by itself, a reasonable ground for the refusal of a planning application, unless that opposition is founded on valid planning reasons which are supported by substantial evidence. While the planning authority will need to consider the substance of any local opposition to the proposal, their duty is to decide a case on its planning merits."*

23. In terms of deciding a case on its planning merits, great weight should, by comparison, be given to the advice and guidance provided by the HSE and NRPB, the bodies with statutory responsibility. They now require compliance with the ICNIRP guidelines, which as clearly demonstrated will be met.

The Maastricht Treaty

24. The precautionary principle as found in the Maastricht Treaty does not impose any additional action by central or local government over and above the action already taken, which now includes adopting the precautionary approach as recommended by the IEGMP and accepted by government. This is made clear in a Written Answer to a question given in the House of Commons on 28 February 2000 (Hansard Column:8W):

> ***Dr. Stoate**: To ask the Secretary of State for the Environment, Transport and Regions what plans he has to empower local authorities to have recourse to the precautionary principle in Article 174 of the EC treaty when assessing planning applications from telecommunications companies to erect mobile phone masts within highly populated areas.[111425]*
>
> ***Ms Beverley Hughes:** Article 174 of the EC treaty applies only in respect of policy-making at the EU level, and not to policy-making by individual member states.*

Human Rights

25. As separate regulatory system exists to protect public safety, which can become more stringent in the future, requiring compliance regardless of any planning permission, the grant of planning permission cannot take away that protection and so should not affect any human rights in this regard.

Summary

26. In summary, this statement provides all the information required under current legislation and policy on health and safety and related issues. It clearly demonstrates that no reasonable basis for refusing planning permission exist, either directly or indirectly from unsubstantiated concerns that might be raised about health and safety.

TECHNICAL NOTE TO ACCOMPANY DIAGRAMS

- Frequencies 1 x 420 MHz
  2 x 900 MHz
  2 x 1800 MHz
  1 x 2GHz

- Modulation Characteristics Pulsed

- Power Output Maximum Effective Isotropic Radiated Power of 66 dBm

- Reflection coefficient of unity

- Combined electrical and mechanical downtilt angles between 2 degrees and 10/15 degrees for the 10 metre and 15 metre heights respectively.

Maximum Exclusion Zone with 6 operators

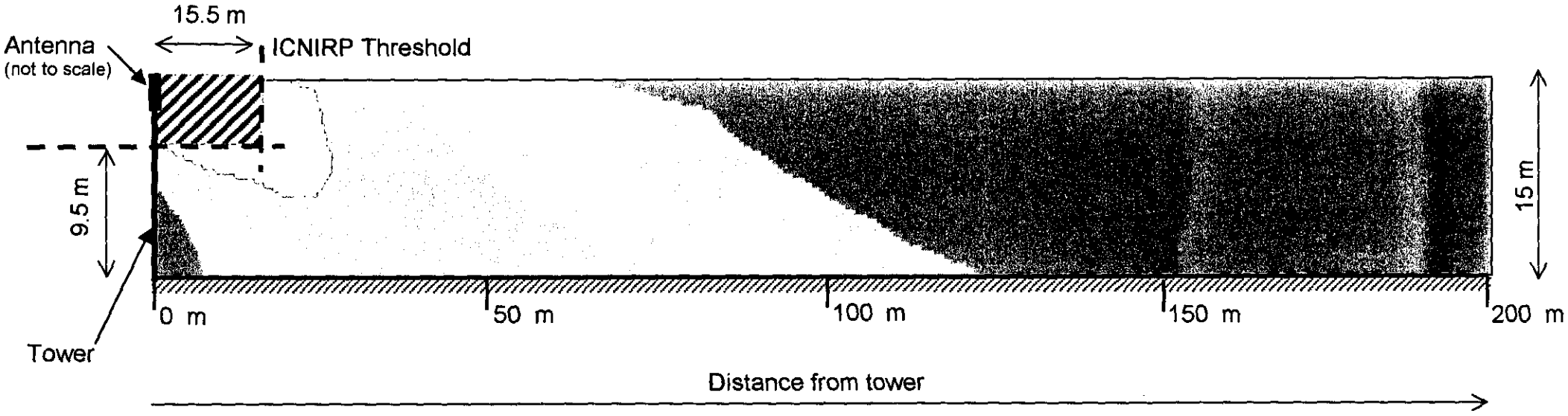

Key

ICNIRP Exclusion Zone

50 – 99% of ICNIRP Guidelines

25 – 49% of ICNIRP Guidelines

10 – 24% of ICNIRP Guidelines

Less than 10% of ICNIRP Guidelines

Maximum Exclusion Zone with 6 operators

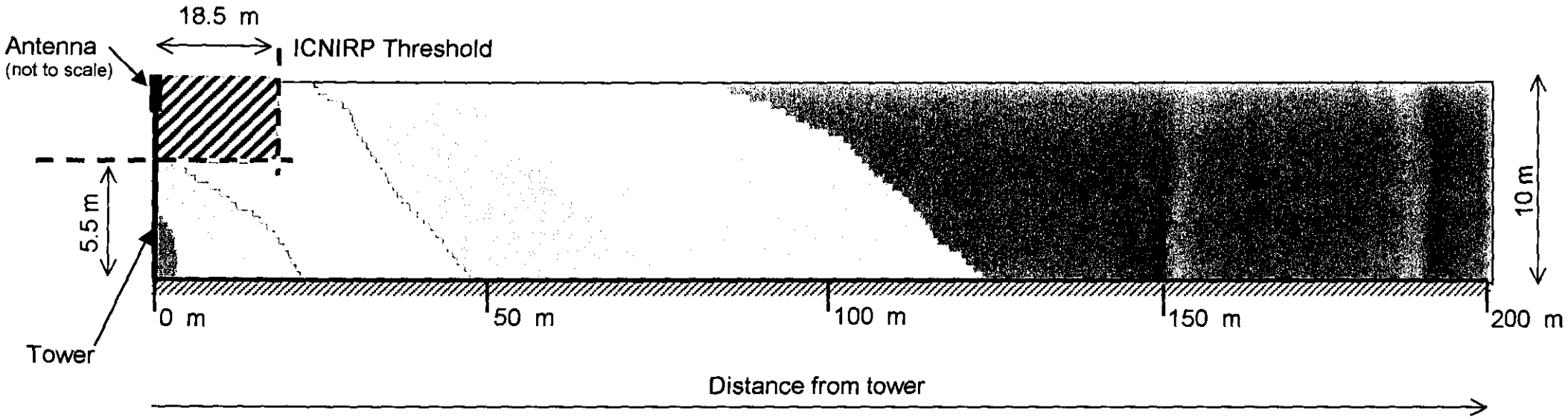

Key

- ICNIRP Exclusion Zone
- 50 – 99% of ICNIRP Guidelines
- 25 – 49% of ICNIRP Guidelines
- 10 – 24% of ICNIRP Guidelines
- Less than 10% of ICNIRP Guidelines

U.S. AIR 2002 * 6097

WORK SHEET FOR : Natalie Brown

Application Number : F/2002/6097

Applicant : Crown Castle International C/O Waldon Telecom Ltd.

Location : Ducks Nest Farm, Eversley Road, Arborfield Cross, Reading.

Proposal : Proposed erection of replacement 27.5m high telecommunications mast. Removal of 24m high mast.

Site Notice Displayed ? :	YES	NO	DATE
	✓		13/5

Date of Neighbour Notifications : .....

Date of Site Visit : ..... 13/5 .....

Date Registered : 09/04/2002

Earliest Date for Decision : 09/05/2002

Latest Consultation Date/Site Notice Expiry Date : 09/05/2002

This application will have expired on: 04/06/2002. You need to make a decision 1 day prior to this date for this application to count as determined in less than 8 weeks.

Consultation Responses :

Landscape : landscaping + planting req'd.

Env. Health : no objections.

Planning Issues : rural, Sep of Sett countryside, greengap & wedges

Application Number: F/2002/6097

Appraisal :

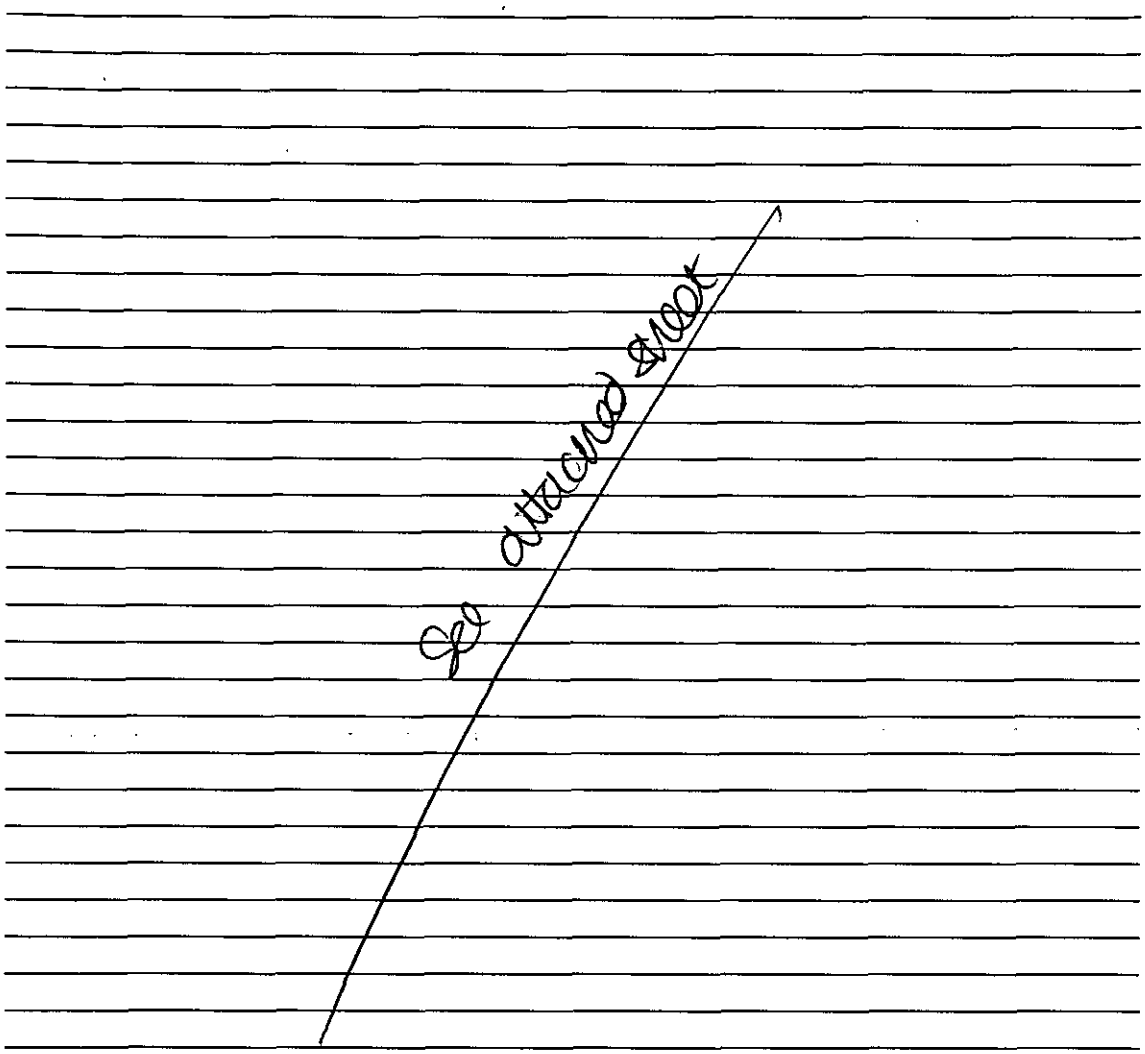

Recomendation : Approval: ☐ **Refusal:** ☐
(tick appropriate box)

Application Number F/2002/6097
Conditions/Reasons for Refusal

No	Std Con	Std Reas	Non Std Conditions / Reasons for Refusal
1.	C001	R001	
2.			Prior to the commencement of the development hereby permitted, the proposed equipment cabins & existing one-to-one cabin shall be painted in a colour to match the existing Vodaphone cabin.
		Reason:	In the interests of visual amenity.
3.			Within one month of the erection + operation of the proposed replacement mast, the existing mast shall be dismantled and removed from the site.
		Reason:	In the interests of visual amenity.

Informative for approvals	
N16	
LODDON AREA LOCAL PLAN POLICIES:	CN2, LC1
SOUTH-EAST AREA LOCAL PLAN POLICIES:	
WOKINGHAM DISTRICT LOCAL PLAN POLICIES:	WOS3, WC1, WC2, WIC4
GREEN BELT LOCAL PLAN POLICIES:	
BERKSHIRE STRUCTURE PLAN POLICIES:	C2, C6, TC1
MINERALS LOCAL PLAN POLICIES:	

RECOMMENDATION AND CONDITIONS/REASONS AGREED: T G Watson
(Development Control Manager)

Date: 31/7/02

RECORD OF SITE VISIT

SITE ADDRESS: Ducks Nest Farm
Eversley Road Arborfield Cross
Reading.

APPLICATION NUMBER: F/2002/6097

OFFICER: Natalie Brown

DATE OF SITE VISIT: 13/5

1 SITE/STATUTORY NOTICE DISPLAYED ? Yes at site (gated) entrance

2. DESCRIPTION OF SURROUNDINGS

rural - e

3. DESCRIPTION OF SITE/BUILDING

existing lattice (but lower height) mast.

4. RELATIONSHIP TO ADJOINING PROPERTIES

5. SITE CONSTRAINTS

TREES

ACCESS/PARKING

LEVELS

BOUNDARY TREATMENT

OTHERS

Application Number: F/2002/6097-Ducks Nest Farm

Appraisal:

Development
Proposed erection of replacement 27.5m high lattice style telecommunications mast with removal of existing 24m high lattice telecommunications mast. The redevelopment of the mast is required to established 'third generation' network of services.
The site is located within a rural area designated as green gap & wedges.

Relevant Policies
BSP: C2, C6, TC1
LALP: LTV2, LC1
WDLP(DD): WOS3, WCC1, WCC2, WIC14

1) Impact upon neighbouring properties
The proposed development seeks a replacement of the existing mast. It would be located 250m from Ducks Nest Farm, 92m from The Bramshill Hunt Public House, 93m from the closest Rickman Close properties and approx. 80m from the boundary with the Baird Road residential development (F/2000/1994).

Due to the distances from the mast and given that it is a replacement of an existing mast, it is considered that there would be no adverse effects upon neighbouring properties.

2) Impact upon the character of the area
There is already an existing mast, and the replacement with a 3.5m higher mast would have no additional major impacts compared to the existing impact. (In any case there are large electric pylons located at the rear of the site, which are viewed against the mast.)

Whilst the site has some screening to the front which helps to minimise the impact of the equipment cabins, there is no screening along the rear of the site (northern boundary). This is currently open along this northern boundary. Landscaping was sought, however, the land outside of the compound is not within the applicants ownership and can therefore not be landscaped. Having discussed this matter with the DCM, it was agreed that as there is currently no landscaping, the application could not be refused on this basis, provided that the cabins are painted a dark green colour.

3) Other Issues
No letters of representation including the Parish Council were received. Environmental Health raised no objections to the proposed replacement of the mast.

Approval: ✓ ~~**Refusal:**~~

waldon telecom

Waldon Design & Construction Ltd
The Bank House
24 High Street
Chipping Sodbury
Bristol
BS37 6AH

Telephone
01454 313123

Fax
01454 314123

E-mail
enq@waldontelecom.com

Website
www.waldontelecom.com

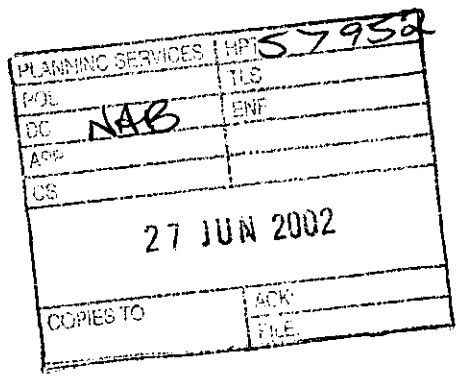

Our ref: PJ/1491241
Your Ref: F/2002/6097

24 June 2002

The Chief Planning Officer
Wokingham District Council
Environmental Services Department
Planning Services
PO Box 157
Shute End
Wokingham
Berks
RG40 1WR

He phoned 8/7 chasing up. Said I would try & look into this week.

→ 01454 313123
→ 07968 900079

For the attention of Natalie Brown

Dear Miss Brown,

Re: Crown Castle International/Hutchison 3G redevelopment of existing mast at Ducks Nest Farm, Everesley Road, Arborfield.

I write following our brief telephone conversation last week in relation to the abovementioned planning application. I have now had the opportunity to visit the site for myself and, following my client's confirmation, additional land outside the existing compound cannot be provided for landscaping purposes.

Please find below a copy of two photos taken on site, they show the existing north elevation of the site from two points along the road side, these being the only publicly obtainable views of the compound equipment apart from the mast itself. As can be seen from the photos the existing Vodafone cabinet is well camouflaged given its suitable green colouring, whilst the existing grey coloured One2One cabin is somewhat more prominent.

If one refers to the proposed site plan of the compound it can be seen that the resultant view will feature the lower section of the new mast being screened from said views by the proposed Hutchison 3G cabin. It is therefore intended to:

1. Colour the proposed H3G cabin to match that of the Vodafone cabin;
2. Colour the existing One2One cabin to match the Vodafone Cabin.

This will effectively camouflage the compound to a much greater extend than currently exists making the revised compound less prominent than the existing (note that the proposed H3G coloured cabin will now screen the lower sections of the new mast also).

Referring back to the photos therefore, the result will be that the finished compound will appear very similar to the right-hand side of the existing compound, as viewed from the road, which in my opinion is effective through the use of colouring and negates any requirements for landscaping.

Registered in UK
No: 3651880
VAT Registration
No: 709 2762 24

Registered Office:
Centennium House
Pyrford Road
West Byfleet
Surrey
KT14 6LD

I would be most grateful to be advised of your views on this alternative provision, which we consider is a reasonable alternative given that no additional land may be obtained and that there is very limited ground available for planting within the resultant compound area.

Yours sincerely,

Mark Tombs BSc DipTP MRTPI
Planning Manager

Waldon Telecom

Mob: 07968 900079

On behalf of: **Crown Castle UK Ltd. and Hutchison 3G.**

PLANNING SERVICES | HPT
TLS
ENF
27 JUN 2002

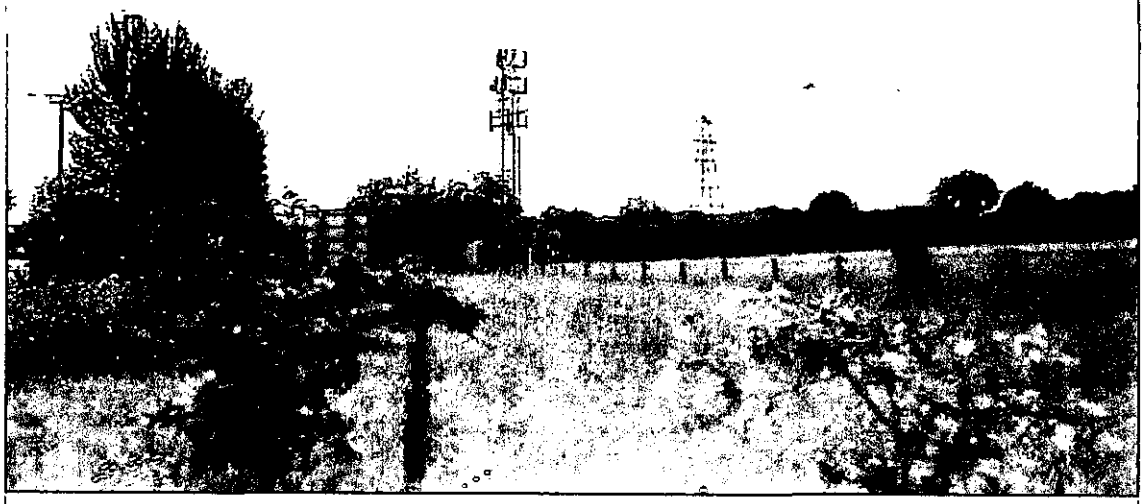

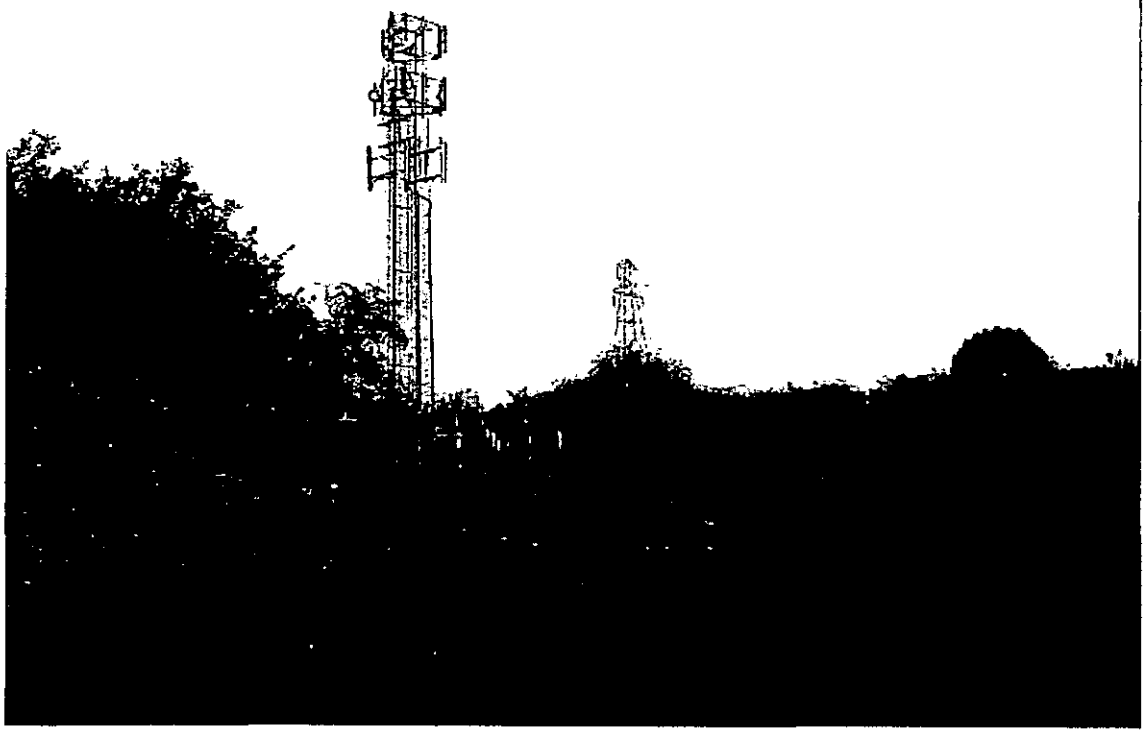

TO: **DEVELOPMENT CONTROL**
Natalie Brown

FROM: Environmental Design

DATE: 29 April 2002

Location:	Ducks Nest Farm, Eversley Road, Arborfield.
Proposal:	Proposed erection of replacement 27.5m high telecommunications mast. Removal of 24m high mast.
Application Number:	F/2002/6097

In response to your consultation dated 16 April 2002 for the above application, the landscape comments are as follows:

The site is located within the countryside (at present designated as Green Gap) and is contained in part by existing vegetation on the south eastern and south western boundaries of the site. The northern boundary is completely open to the countryside and therefore views will be gained of the larger mast and additional cabin when travelling south along Eversley Road.

To help soften the impact of the cabins within the compound, additional planting such as a native hedgerow with hedgerow trees is required on the northern side of the existing chainlink fencing. Details of plant species, size of plant at time of planting and planting densities will need to be submitted by the applicant.

Catherine Brimble

Catherine Brimble
Landscape Architect

Natalie Brown

From: John Mullaney
Sent: 25 April 2002 11:28
To: Natalie Brown
Subject: Ducks Nest Farm F/2002/6097-erection of telecommunications mast

I have no objections to this proposed development.

John Mullaney
Senior Environmental Health Officer
Environmental Protection and Housing
Wokingham District Council
Tel. 0118 974 6766
Fax. 0118 974 6401
john.mullaney@wokingham.gov.uk
www.wokingham.gov.uk

(*) PRE-APPS (*) ATTACHED

Application Number : F/2002/6097	**Map No :** 81,89
Case Officer : NAB.	**Site Area :** 0 01
Valid Date : 03 APR 2002	**Received Date: 11/03/2002**

Level : Delegated Application

Description : Proposed erection of replacement 27.5m high telecommunications mast. Removal of 24m high mast.

Location : Ducks Nest Farm, Eversley Road, Arborfield Cross, Reading.

Parish : AB **Ward : ARB** 16.4.02 B

Applicant : Crown Castle International C/O Waldon Telecom Ltd.

Fee Required: £190 **Fee Received: £190** (3)

Additional: ..... or Refund: .....

Enforcement Section to be notified ☐ (tick if required)

Additional information required for validation;

REASON	NOTES	DATE REQ	DATE RECD
LOCATION PLANS	Access to highway?	phoned 26/3	✓
BLOCK PLANS		to follow	03 APR 2002
FORMS UNSIGNED			
S.66 MISSING/INCORRECT/ UNSIGNED			
ELEVATION PLANS			
FLOOR PLANS			
NO SCALE OR SCALE IS IMPERIAL			
ENCROACHMENT LETTER REQUIRED			
OTHER			

Is the site in a Conservation Area: ☐ Yes ☐ No If "Yes" which one _____

Is the site a Listed Building: ☐ Yes ☐ No

Is a Statutory Advertisement required: ☐ Yes ☐ No

INTERNAL CONSULTATIONS 16.4.02 B

Building Control

Heritage (Harold Sanders)

Landscape Catherine Brimble ✓

Trees

Environmental Health ✓

Housing

Leisure & Cultural Services

Public Rights of Way Officer

Property

Policy & Plans

Joint Strategic Planning Unit

Archaeological Officer (BABTIE)

Education

Social Services

Highways

EXTERNAL CONSULTATIONS

Adjacent DPA : _____

Adjacent Parish : Barkham. ✓

SEB

British Gas

Oil pipeline

Transco

Environment Agency

Railtrack

Police Arch Officer

HERITAGE BODIES

Victorian Society
The Georgian Group
Ancient Monuments Society
Council for British Arch
RCHME
NRPB (Telecommunications)
Sport England
Society for Proct' of Ancient Bldgs
English Heritage

OTHERS

Green Gap & Wedges
Rural Area
Countryside

NEIGHBOURS

S/N+ see map

Pls include Mrs Seal,
Ducks Nest Farm
Eversley Rd, Arborfield
RG2 9PJ

2 x pre-apps attached.

Organisation_Name	Building_Name	address1	Postcode
		74VALON ROADREADING	RG2 9QQ
		77VALON ROADREADING	RG2 9QQ
		80VALON ROADREADING	RG2 9QQ
		83VALON ROADREADING	RG2 9QQ
		85VALON ROADREADING	RG2 9QQ
		86VALON ROADREADING	RG2 9QQ
		88VALON ROADREADING	RG2 9QQ
		1VALON ROADREADING	RG2 9LT
		2VALON ROADREADING	RG2 9LT
		3VALON ROADREADING	RG2 9LT
		4VALON ROADREADING	RG2 9LT
	11A	11ARICKMAN CLOSEREADING	RG2 9PS
THE YARD			RG2 9PT
		25BRAMSHILL CLOSEREADING	RG2 9PL
		26BRAMSHILL CLOSEREADING	RG2 9PL
		10BRAMSHILL CLOSEREADING	RG2 9PT
		11BRAMSHILL CLOSEREADING	RG2 9PT
		12BRAMSHILL CLOSEREADING	RG2 9PT
		14BRAMSHILL CLOSEREADING	RG2 9PT
F/2002/6097		15BRAMSHILL CLOSEREADING	RG2 9PT
		16BRAMSHILL CLOSEREADING	RG2 9PT
		17BRAMSHILL CLOSEREADING	RG2 9PT
		18BRAMSHILL CLOSEREADING	RG2 9PT
		19BRAMSHILL CLOSEREADING	RG2 9PT
		20BRAMSHILL CLOSEREADING	RG2 9PT
		21BRAMSHILL CLOSEREADING	RG2 9PT
		22BRAMSHILL CLOSEREADING	RG2 9PT
		23BRAMSHILL CLOSEREADING	RG2 9PT
		5BRAMSHILL CLOSEREADING	RG2 9PT
		6BRAMSHILL CLOSEREADING	RG2 9PT
		7BRAMSHILL CLOSEREADING	RG2 9PT
		8BRAMSHILL CLOSEREADING	RG2 9PT
		9BRAMSHILL CLOSEREADING	RG2 9PT
		107VALON ROADREADING	RG2 9QJ
		108VALON ROADREADING	RG2 9QJ
		109VALON ROADREADING	RG2 9QJ
		110VALON ROADREADING	RG2 9QJ
		115VALON ROADREADING	RG2 9QJ
		116VALON ROADREADING	RG2 9QJ
		117VALON ROADREADING	RG2 9QJ
		118VALON ROADREADING	RG2 9QJ
		119VALON ROADREADING	RG2 9QJ
		120VALON ROADREADING	RG2 9QJ
		121VALON ROADREADING	RG2 9QJ
		122VALON ROADREADING	RG2 9QJ
		123VALON ROADREADING	RG2 9QJ
		124VALON ROADREADING	RG2 9QJ
		73VALON ROADREADING	RG2 9QQ
		75VALON ROADREADING	RG2 9QQ
		76VALON ROADREADING	RG2 9QQ
		78VALON ROADREADING	RG2 9QQ
		79VALON ROADREADING	RG2 9QQ
		81VALON ROADREADING	RG2 9QQ
		82VALON ROADREADING	RG2 9QQ
		84VALON ROADREADING	RG2 9QQ
		87VALON ROADREADING	RG2 9QQ
	1 WHITEHALL MEWS	1 WHITEHALL MEWSBRAMSHILL CLOSEREADING	RG2 9QL
	2 WHITEHALL MEWS	2 WHITEHALL MEWSBRAMSHILL CLOSEREADING	RG2 9QL
	3 WHITEHALL MEWS	3 WHITEHALL MEWSBRAMSHILL CLOSEREADING	RG2 9QL
	4 WHITEHALL MEWS	4 WHITEHALL MEWSBRAMSHILL CLOSEREADING	RG2 9QL
	5 WHITEHALL MEWS	5 WHITEHALL MEWSBRAMSHILL CLOSEREADING	RG2 9QL

Organisation_Name	Building_Name	address1	Postcode
ARMY WELFARE SERVICE COMMUNIT			RG2 9PT
THE BRAMSHILL HUNT		27BRAMSHILL CLOSEREADING	RG2 9PL
CARTER MOTORCYCLES	BOUND OAK	BOUND OAKEVERSLEY ROADREADING	RG2 9PN
		1RICKMAN CLOSEREADING	RG2 9PS
		10RICKMAN CLOSEREADING	RG2 9PS
		11RICKMAN CLOSEREADING	RG2 9PS
		12RICKMAN CLOSEREADING	RG2 9PS
		2RICKMAN CLOSEREADING	RG2 9PS
		3RICKMAN CLOSEREADING	RG2 9PS
		4RICKMAN CLOSEREADING	RG2 9PS
		5RICKMAN CLOSEREADING	RG2 9PS
		6RICKMAN CLOSEREADING	RG2 9PS
		7RICKMAN CLOSEREADING	RG2 9PS
		8RICKMAN CLOSEREADING	RG2 9PS
		9RICKMAN CLOSEREADING	RG2 9PS
		1BRAMSHILL CLOSEREADING	RG2 9PT
		2BRAMSHILL CLOSEREADING	RG2 9PT
		3BRAMSHILL CLOSEREADING	RG2 9PT
		4BRAMSHILL CLOSEREADING	RG2 9PT
DUCKS NEST FARM			RG2 9PJ
	THE COPSE	THE COPSEEVERSLEY ROADREADING	RG2 9PN
ARCHWAY SERVICES LTD	BOUND OAK	BOUND OAKEVERSLEY ROADREADING	RG2 9PN
ARC TEC WELDING & FABRICATION	BOUND OAK	BOUND OAKEVERSLEY ROADREADING	RG2 9PN
	DUCKS NEST FARM CARA	DUCKS NEST FARM CARAVANEVERSLEY ROADREA	RG2 9PJ

**********FILE COPY**********

Tel: (0118) 974 6492

Date: 16 April 2002

My ref: F/2002/6097

WOKINGHAM UNITARY
Aiming for Excellence

Councillor G Cowan
Birch House
Eversley Road
Arborfield Cross
Reading
RG2 9PG

Environmental Services Department
Planning Services
P.O. Box 157
Shute End, Wokingham
Berkshire RG40 1WR
Tel: (0118) 974 6000
Fax: (0118) 974 6484
Minicom No: (0118) 974 6991
DX: 33506 – Wokingham

Dear Councillor

Application Number: F/2002/6097
Ducks Nest Farm, Eversley Road, Arborfield Cross, Reading.
Proposed erection of replacement 27.5m high telecommunications mast. Removal of 24m high mast.

I write to let you know that the above mentioned application has been received.

At this stage a recommendation has not yet been made. This form should only be returned if it is likely that you might wish for the application to be listed for consideration by the Development Control Committee. This form must be received no later than 28 days from the date of this letter.

If you have concerns about the proposals it may be possible for these to be addressed during the consideration of the application. In these circumstances it would be helpful if you could discuss these with the case officer **Natalie Brown** on **(0118) 974 6492** in the first instance.

Yours sincerely
Trevor Watson
Development Control Manager

LISTING FORM

Case officer: **Natalie Brown** Application Number: **F/2002/6097**
Ducks Nest Farm, Eversley Road, Arborfield Cross, Reading.
Proposed erection of replacement 27.5m high telecommunications mast. Removal of 24m high mast.
I wish this application to be listed should the officers recommendation be for: GRANT/REFUSAL and my reasons are:

_____

_____

Should the officers recommendation be in accordance with my views I am happy for the application to be determined under delegated powers. YES/NO

Signed: _____ Date: _____

Councillor G Cowan

**********FILE COPY**********

Received by Wokingham District Council

Application No: F/2002/6097

Proposal:
Proposed erection of replacement 27.5m high telecommunications mast. Removal of 24m high mast.

Location:
Ducks Nest Farm, Eversley Road, Arborfield Cross, Reading.

The application is available for inspection at Wokingham District Council's offices during the following times:

PLANNING DEPARTMENT, SHUTE END, WOKINGHAM TEL (0118) 974 6428
8.30 - 5.00 Monday - Thursday & 8.30 - 4.00 Friday

WOODLEY LIBRARY HEADLEY ROAD WOODLEY 9.30am - 7.00pm Mon, Thurs & Fri. 9.30am - 5.00pm Tues, 9.30am - 1.00pm Saturday and 1.00pm - 4.00pm Sunday. Library closed all day Wednesday. If you intend to view this application at Woodley Library please allow 4 days from the date of this letter for delivery of plans and remember to quote application number F/2002/6097 to enable the library staff to locate the correct information.

Comments should be sent in writing QUOTING THE APPLICATION NUMBER to the Case Officer Natalie Brown P.O. Box 157 Council Offices, Shute End, Wokingham Berkshire, RG40 1WR to arrive on or before 09/05/2002. Written comments submitted will become available for public inspection.

In view of the very large number of planning applications and letters of comment received, it will not be possible for an individual reply to be issued to observations made. However any comments will be taken into account when the application is determined and you will be notified of the decision.

Trevor Watson
Development Control Manager

16 April 2002

09 APR 2002 * 6097

PLANNING SERVICES	HPT 35686
POL	TLS
DC CAH	ENF
APP	
CS	
09 APR 2002	
COPIES TO	ACK.
	FILE.

waldon telecom

Waldon Telecom Ltd
Centennium House
Pyrford Road
West Byfleet
Surrey
KT14 6LD

Telephone
01932 411011

Fax
01932 411012

E-mail
enq@waldontelecom.com

Website
www.waldontelecom.com

Our ref: PJ/1491241

8th April 2002

The Chief Planning Officer
Wokingham District Council
PO Box 157
Shute End
Wokingham
Berkshire
RG40 1WR

For the attention of Mrs Hurst

Dear Sir

CROWN CASTLE INTERNATIONAL / HUTCHISON3G
REDEVELOPMENT OF EXISTING MAST AT DUCKS NEST FARM, EVERSLEY ROAD, ARBORFIELD.
SUBMISSION OF PLANNING APPLICATION – ADDITIONAL INFO.

Further to the planning application at the above site which was submitted on the 1st March, and my subsequent telephone conversation with Mrs Hurst on the 8th April, please find enclosed two sets of drawings. Drawing Number 17446.2.04/2A is to replace Drawing Number 17446.2.04/2 which was submitted with the original application. Drawing Number PJ/17746.2.04/3 has been submitted as an additional drawing to help identify the access route from the main road (A327) to the application site.

I trust the attached information is sufficient to allow you to register this application, if not then please let me know as soon as possible. Should you require any further information, do not hesitate to contact me.

Yours faithfully

Philip James

07970100758

On behalf of
CROWN CASTLE UK LTD

Enc

Registered in UK
No: 3651880
VAT Registration
No: 709 2762 24

Registered Office:
Centennium House
Pyrford Road
West Byfleet
Surrey
KT14 6LD

INVESTOR IN PEOPLE

QMS ISO 9002 REGISTERED FIRM

1769a

WOKINGHAM DISTRICT COUNCIL
PLANNING APPLICATION

PART 1

APPLICATION FOR PERMISSION TO CARRY OUT DEVELOPMENT - TOWN AND COUNTRY PLANNING ACTS

Please answer ALL QUESTIONS in BLOCK LETTERS. If a question is not applicable, answer N/A in space. Please submit SIX copies of this form and plans to:-

THE DISTRICT PLANNING OFFICER
WOKINGHAM DISTRICT COUNCIL
PLANNING DEPARTMENT
P O Box No. 157
COUNCIL OFFICES
SHUTE END
WOKINGHAM
BERKSHIRE, RG40 1WR

FOR OFFICE USE ONLY

09 APR 2532* 6697

1.	APPLICANT'S NAME	Crown Castle International
	ADDRESS	PO Box 98, Warwick
	POST CODE	CV34 6TN PHONE 01926 416000
2. If the applicant has an agent, all correspondence will be sent to the agent	AGENT'S NAME	Waldon Telecom Ltd
	ADDRESS	Centennium House, Pyrford Road, West Byfleet, Surrey.
	POST CODE	KT14 6LD PHONE 01932 411011
3. On the plans show the SITE outlined in RED Show also OTHER land in the applicant's ownership or control in BLUE.	SITE LOCATION	Mast at Ducks Nest Farm, Eversley Road, Arborfield.
4. WHAT IS THE APPLICATION FOR ? Give brief details and state for what purpose this site and any buildings will be used.		The replacement of an existing 24m high mast with a 27.5m high mast to accommodate Hutchison3G equipment.
5. Give the area in hectares or part of a hectare	AREA OF SITE	0.02 hectares
6. State the applicant's interest in the land e.g. owner, prospective purchaser, lessee	OWNERSHIP	Owner
7. List all the plans and drawings submitted with the application	PLANS/DRAWINGS	17446.2.04/2; 17446_07_100_M03_03; 17446_07_150_M03_03

8. DOES THE APPLICATION INVOLVE ANY OF THE FOLLOWING ?

Tick the boxes(x)

CHANGE OF USE			REDEVELOPMENT	X
ERECTION OF NEW BUILDING			ALTERATION or EXTENSION	

9. WHAT TYPE OF APPLICATION IS THIS ? Tick one box only

OUTLINE PERMISSION		See question 10
FULL PERMISSION	X	
APPROVAL OF DETAILS/RESERVED MATTERS		State relevant outline permission number. Also complete Question 10
TEMPORARY PERMISSION		State period required
RELAXATION OF CONDITIONS		State relevant application number Conditions to be relaxed

10. IF THIS IS AN OUTLINE APPLICATION OR AN APPROVAL OF RESERVED MATTERS, which details, if any, do you wish to be considered as part of this application ?

		SITING	
EXTERNAL APPEARANCE		DESIGN	
MEANS OF ACCESS		LANDSCAPING	

11. WHAT IS THE EXISTING USE OF THE LAND AND/OR BUILDING(S) e.g. residential, industrial, etc. If the site is vacant say so, and also state its previous use and when that ceased.

Telecommunications mast

12. DOES A PUBLIC RIGHT OF WAY CROSS OR ABUT THE SITE OR THE PROPOSED ACCESS? YES/NO

If yes, show existing route(s) and any proposed alternatives on the plans

13. ARE THERE ANY TREES ON THE SITE? IF YES, ARE ANY TO BE FELLED? YES/NO

No

If yes, please show their positions, spread and species on the plans and which, if any, are to be felled.

14. STATE EXTERNAL MATERIALS TO BE USED.

Mast will be made from galvanised steel. The Hutchison3G equipment cabinet will be plastic coated steel.

15. HOW WILL THE SITE BE ENCLOSED? Say whether walls, fences or hedges, and give height, colour and materials. If the site is divided into plots, say how each is to be enclosed.

By existing 1.8m high chainlink fence and hedgerow.

16. HOW WILL SURFACE WATER BE DISPOSED OF?

Via existing soakaways.

17. HOW WILL FOUL SEWAGE BE DISPOSED OF? N/A

To existing system YES/NO

If no, please give details: Not applicable

18. WHAT ARE THE ACCESS ARRANGEMENTS?
AS EXISTING
AS PROPOSED
Give details of pedestrian and vehicular access

Via existing access gate, no alterations required.

19. HAS PROVISION BEEN MADE FOR THE DISABLED? See notes for applicants

N/A

20. IF THIS PROPOSAL INVOLVES RESIDENTIAL DEVELOPMENT OR THE LOSS OF RESIDENTIAL UNITS, COMPLETE THE FOLLOWING TABLE

	No. OF DWELLINGS/HABITABLE ROOMS PROPOSED	TO BE RETAINED	TO BE LOST
HOUSE	/ *	/ *	/ *
BUNGALOW	/ *	/ *	/ *
FLAT/MAISONETTE	/ *	/ *	/ *
OTHER	/ *	/ *	/ *

* STATE No. OF HABITABLE ROOMS

21. DOES THE PROPOSAL INVOLVE ANY NON-RESIDENTIAL BUILDING OR USE? YES/NO

If YES, complete Part 2 of the form

22. DOES THE PROPOSAL INVOLVE THE WINNING, WORKING OR PROCESSING OF MINERALS: THE DISPOSAL OF MINERAL WASTE, OR THE DEPOSIT OR PROCESSING OF REFUSE AND WASTE MATERIALS? YES/NO

If YES, please ask for and complete Part 3 of the form

23. STATE THE FEE ENCLOSED WITH THIS APPLICATION
The current scale of fees is enclosed. If you believe a reduced fee or no fee is payable, say why.

£190.00

I hereby apply for permission in respect of the particulars described above and in the attached plans and drawings. If planning permission is granted, the development must be carried out strictly in accordance with the approved plans. Failure to do so could result in enforcement action being taken. Permission under the Town & Country Planning Acts does not obviate the possible need to apply for Building Regulations approval.

SIGNED [signature] ON BEHALF OF Crown Castle Int DATE 01/03/2002

Before submitting the application check that it is complete, that all questions have been answered and that the site boundary and the new work are clearly edged in red on the plans. Every application must be accompanied by the appropriate certificate and fee. See "NOTES TO HELP APPLICANTS".

1769c

PLANNING APPLICATION

PART 2

This part of the form need only be completed if the application involves non-residential development. Please answer all questions in print or block letters. If the answer is not applicable, write N/A in the space. You may wish to amplify your answers in a covering letter.

24. STATE THE GROSS FLOOR SPACE (by external measurement) OF ALL BUILDINGS TO WHICH THIS APPLICATION REFERS. Please give all floor areas in SQUARE METRES.

	USE CLASS	Existing floor space		Proposed additional floorspace created by	
		Retained in existing use	Lost by change of use or demolition	New building	Change of use
A1	SHOPS				
A2	FINANCIAL AND PROFESSIONAL SERVICES				
A3	FOOD AND DRINK				
B1(a)	OFFICE (other than A2)				
B1 (b)	RESEARCH AND DEVELOPMENT				
B1 (c)	LIGHT INDUSTRIAL				
B2	GENERAL INDUSTRIAL				
B3-7	SPECIAL INDUSTRIAL				
B8	STORAGE OR DISTRIBUTION				
C1	HOTELS AND HOSTELS				
C2	RESIDENTIAL INSTITUTIONS				
D1	NON-RESIDENTIAL INSTITUTIONS				
D2	ASSEMBLY AND LEISURE				
OTHER	Please Specify				
OTHER	Please Specify Telecoms	200 m2	0 m2	0m2	0m2
	TOTAL	200 m2			

25. IF C1 OR C2 USE IS PROPOSED, PLEASE STATE NUMBER OF BED SPACES

26. WHAT PROVISION IS BEING MADE FOR PARKING?

	Cars	Lorries
Existing	N/A	N/A
Proposed	N/A	N/A

27. DESCRIBE THE ACTIVITY OR PROCESSES TO BE CARRIED ON
Please provide details of any equipment, plant or machinery to be installed and any end products. You may wish to amplify your answers in a covering letter.

Telecommunications base station
Redevelopment of mast required to accommodate Hutchison3G antennas.
Hutchison3G equipment cabinet at ground level.

28. WHO WILL OCCUPY THE PREMISES?
a) Give the name and current operating address of the proposed occupier
b) Will these premises be vacated? No

Hutchison3G, Star House, 20 Grenfell Road, Maidenhead, Berks.

29. IF KNOWN, HOW MANY PEOPLE ARE LIKELY TO BE EMPLOYED ON SITE AFTER COMPLETION OF THE DEVELOPMENT?

Existing Staff	Transferred Staff	New Staff	Total
0	0	0	0

30. DOES THE PROPOSAL INVOLVE THE USE OR STORAGE OF ANY OF THE HAZARDOUS SUBSTANCES LISTED IN THE NOTES?
If so, state this material, the quantity and method of storage.

No

Before submitting the application check that it is complete, that all questions have been answered and that the site boundary and the new work are clearly edged in red on the plans. Every application must be accompanied by the appropriate certificate and fee. See "NOTES TO HELP APPLICANTS".

1769d

YOUR PLANNING APPLICATION

WHY DO YOU NEED TO MAKE A PLANNING APPLICATION ?

New buildings, major alterations and enlargement of existing buildings, and many changes in the use of buildings and land need planning permission.
The Town and Country Planning Acts impose a duty on Local Authorities to control these changes, and this means that a balance has to be found between the need and pressure for change, and the desire to protect the character of settlements and the countryside.
The merits of each application are, therefore, carefully examined.

WHAT ELSE MAY YOU HAVE TO DO ?

Listed Building Consent:	for works to a Listed Building; or for demolition works on land within the curtilage of a Listed Building or within a Conservation Area.
Advertisement Consent:	for the display of advertisements or signs
Building Regulation Approval:	for most new building or construction work.

Special forms are available for these types of applications.

You should also check whether there are any other regulations with which you may need to comply.

WHAT HAPPENS TO THE APPLICATION ?

It will first be checked to see if it is complete and if it is, it will be registered.

Consultations will be carried out with public and other bodies, such as the Highway Authority, or Local Parish Councils.

Publicity may be given to allow local people the opportunity to comment on your proposals.

The application will be considered in relation to the Council's planning policies and guidelines, the past history of decisions on that site or in the locality, other standards (such as parking, or visibility at road junctions), and any other material considerations.

The site will be visited by a Planning Officer You may be asked to submit more information, or to amend your application.

The application will then be considered either by a Planning Committee or Sub Committee (made up of Councillors) or by the Chief Officer responsible for planning matters. Objections to an application will be taken into consideration by the Committee or the Chief Officer.

Shortly after the application has been determined, you will receive a Decision Notice.

HOW LONG WILL IT TAKE ?

An application will generally be determined within eight weeks although a longer period may sometimes be required for a complicated application.

WHAT SORT OF DECISION CAN BE MADE ?

Your application may be approved.

Your application may be approved subject to certain conditions. These could impose restictions on the use of land or buildings, or require further details to be approved at a later stage, (e.g. materials or landscaping).
You may appeal against the conditions, but this opens the entire permission to review by the Secretary of State.

Your application may be refused. The reason will be listed on the Decision Notice.

WHAT HAPPENS IF THE APPLICATION IS REFUSED ?

You have the right to appeal against the refusal to the Secretary of State, but you have to do that within six months. Appeals can be dealt with by written representations by both sides, or by a Public Inquiry.
You may ask the Planning Officer whether an amended application would be more likely to receive planning permission.

DATA PROTECTION ACT 1984

'Information contained in this form is likely to be personal data within the terms of the Data Protection Act 1984, and as such will be held by the Council on computer (such as the PLANAPS applications processing system) and may be used by the Council only for purposes registered under the terms of the Data Protection Act.'

1933

3 DUCKS NEST FARM

ADDRESS EVERSLEY ROAD. **PARISH** ARBORFIELD.

PLOT No. **ORD. SHEET No.**

BUILDER

Plan No.	Applicant	Description of Development	Date of Decision	Decision
C/68611/08	R. Seal.	Comply with cond. 08 of consent 98/68511/F for app. landscape plan.	5/8/99	App
TL/2000/2621				

MINISTRY DECISION

SPECIAL ORDERS PD Exq - Telecomms. Apparatus - MacDonald - 13/12/99

~~Land Adj~~ DUCKS NEST FARM

ADDRESS

PARISH ARBOR E

PLOT No. EVERSLEY RD

ORD. SHEET No.

BUILDER SEE WOKINGHAM LANE FOR PARTIE FARMHOUSE (LISTED)

Plan No.	Applicant	Description of Development	Date of Decision	Decision
950/73	Mr H G Coleman	Outline - Dwelling garage GYPSY SITE LAND ADJ.	5-7-73	N/A Repor
32841/2LBC	MR. J BARFOOT	BARN TO RES	13.5.89	Ref
LBC 35506/7	"	" /GARAGE	10.5.90	Ref
36316 W/DR.				
~~40380~~				
40378	MERCURY PERSONAL COMMS.	NEW ACCESS FROM EVERSLEY ROAD TO RADIO STATION	18.1.93	C/A
41263 LBC	MR & MRS R. SEAL	REPL. CONSERVATORY	24.7.93	C/A
43856	"	BARN FOR STORAGE OF HAY	17.3.95	C/A
96/64729/LA	"	PORCH	11.03.97	C/A
97/66843/F	MERCURY	TOWER ETC	3.2.98	C/A

DATE OF COMPLETION

MINISTRY DECISION

SPECIAL ORDERS

98/67826/F	R. SEAL	IMPROVEMENTS TO FARM ACCESS	18-8-98	C/A

1933

2 DUCKS NEST FARM

ADDRESS EVERSLEY ROAD

PARISH ARBORFIELD

PLOT No.

ORD. SHEET No.

BUILDER

Plan No.	Applicant	Description of Development	Date of Decision	Decision
98/68611/F	R. SEAL	BARN TO B2/B8 (STORAGE	21.12.98	C/A
99/69024/V		& MAINTENANCE OF MACHINERY)		
C/68611/08/2	R. SEAL	DETAILS TO COMPLY COND. 08		
		OF CONS. 98/68611/F REVISING		
		LANDSCAPING PLANS	17.03.99	C/A
C/68611/17	R. SEAL	DETAILS TO COMPLY COND 17		
		OF CONS. 98/68611/F - WASH-		
		DOWN AREA PLAN.	17.03.99	C/A
99/69024/V	"	VAR TO COND 6 ON APPR	4.5.99	C/A
		98/67826/F TO ALLOW CONT. USE OF ACCESS FOR RES.		
FP99/8328	T.H. White Ltd.	Alts. to Ag. barn to stores	5.2.99	APP
		workshops + offices		
C/69024/02	R. Seal.	Comply with cond 02 of	30/7/99	Grant

99/69024/V for app. access arrangements.

MINISTRY DECISION

SPECIAL ORDERS

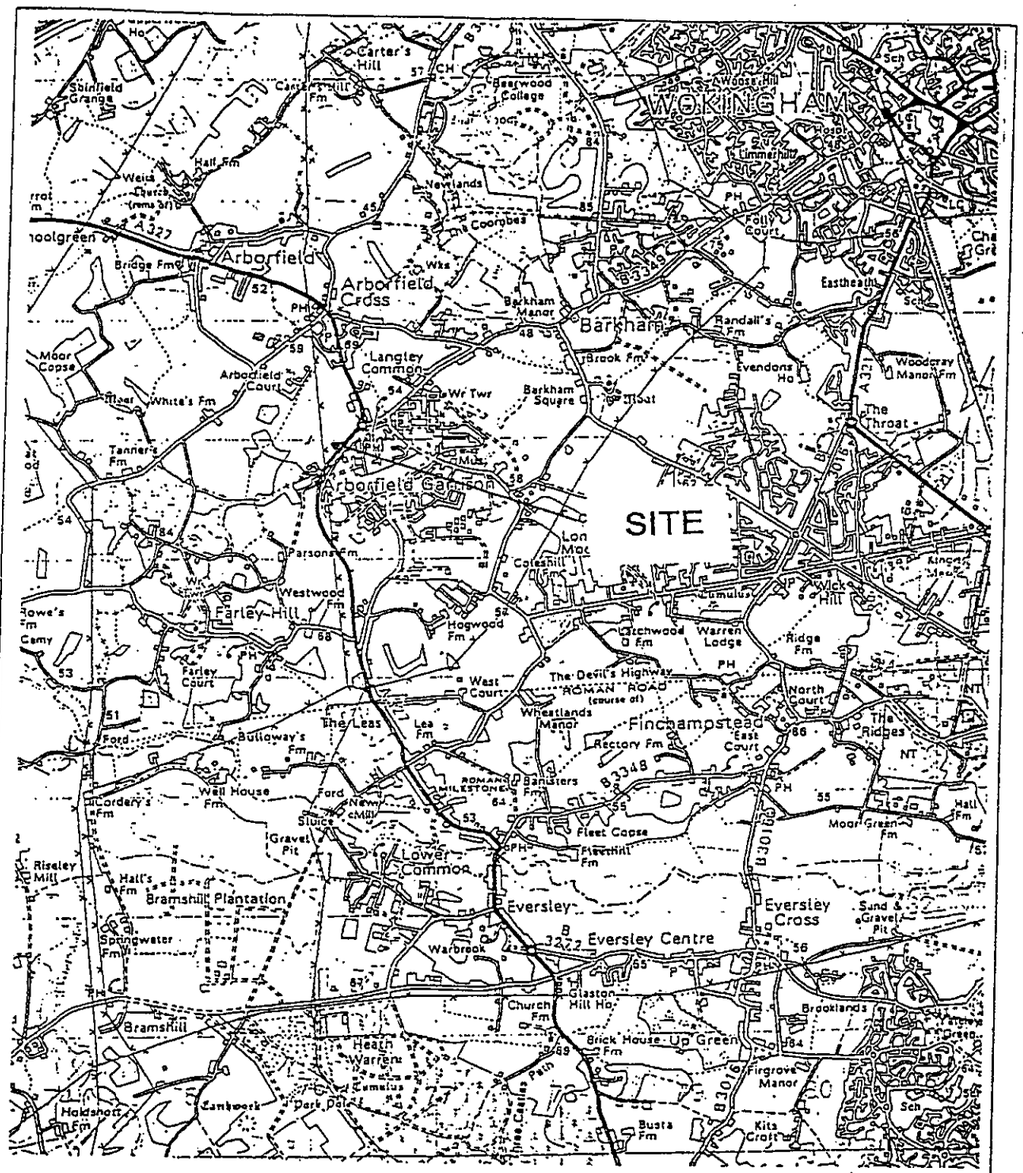

SCALE 1:50,000

AREA MAP

REPRODUCED FROM OS SHEET NO.151 1984 1:50,000
WITH THE PERMISSION OF THE CONTROLLER, H.M.S.O. © CROWN COPYRIGHT.
CROWN CASTLE UK LIMITED LICENCE NO. AL 52065A0001.

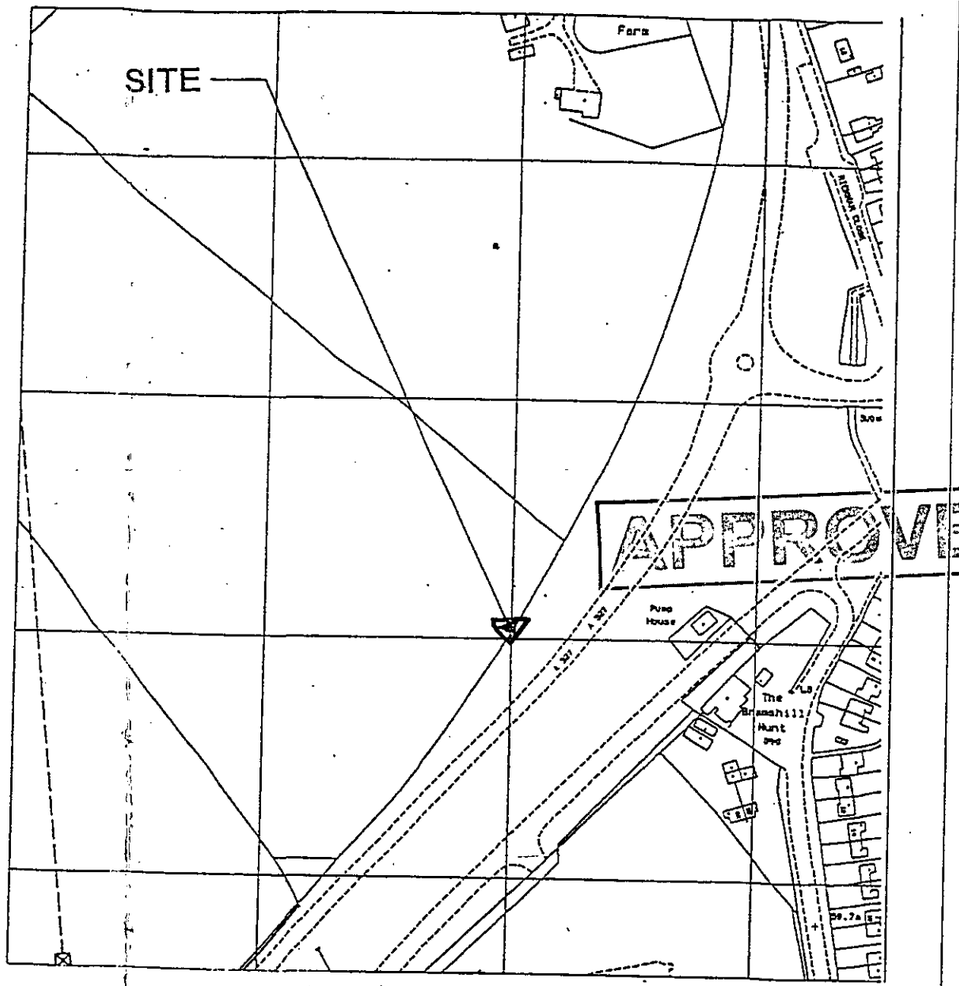

SCALE 1:2500

SITE MAP

REPRODUCED FROM OS SHEET NO.06963.1999. 1:2500
WITH THE PERMISSION OF THE CONTROLLER, H.M.S.O. CROWN COPYRIGHT.
CROWN CASTLE UK LIMITED LICENCE NO. AL 52065A0001.

CROWN CASTLE INTERNATIONAL

NOTES

1) DO NOT SCALE DIMENSIONS

2) ALL DIMENSIONS IN MILLIMETRES UNLESS OTHERWISE STATED

09.APR.2002 6037

SITE ADDRESS:
DUCKS NEST FARM
READING ROAD
ARBORFIELD
BERKSHIRE
RG2 9PJ

ONE2ONE REF:	91241
ORANGE REF:	BRK119

No	Revision	Date	Drn	App
2	Orange upgrade	08.09.00	LJ	
1	1st issue	03.11.99		

© This drawing is the property of CROWN CASTLE UK LIMITED and may not be reproduced or disclosed to a third party in any form without written permission

A·P·T

DUCKS NEST FARM

AREA & SITE LOCATION MAPS

NGR: 476220/165900

Scale: AS SHOWN Date: 03.10.99
Drn: DCY App:

Drg No 17446.2.04/2

A3

09.APR.2002 6097

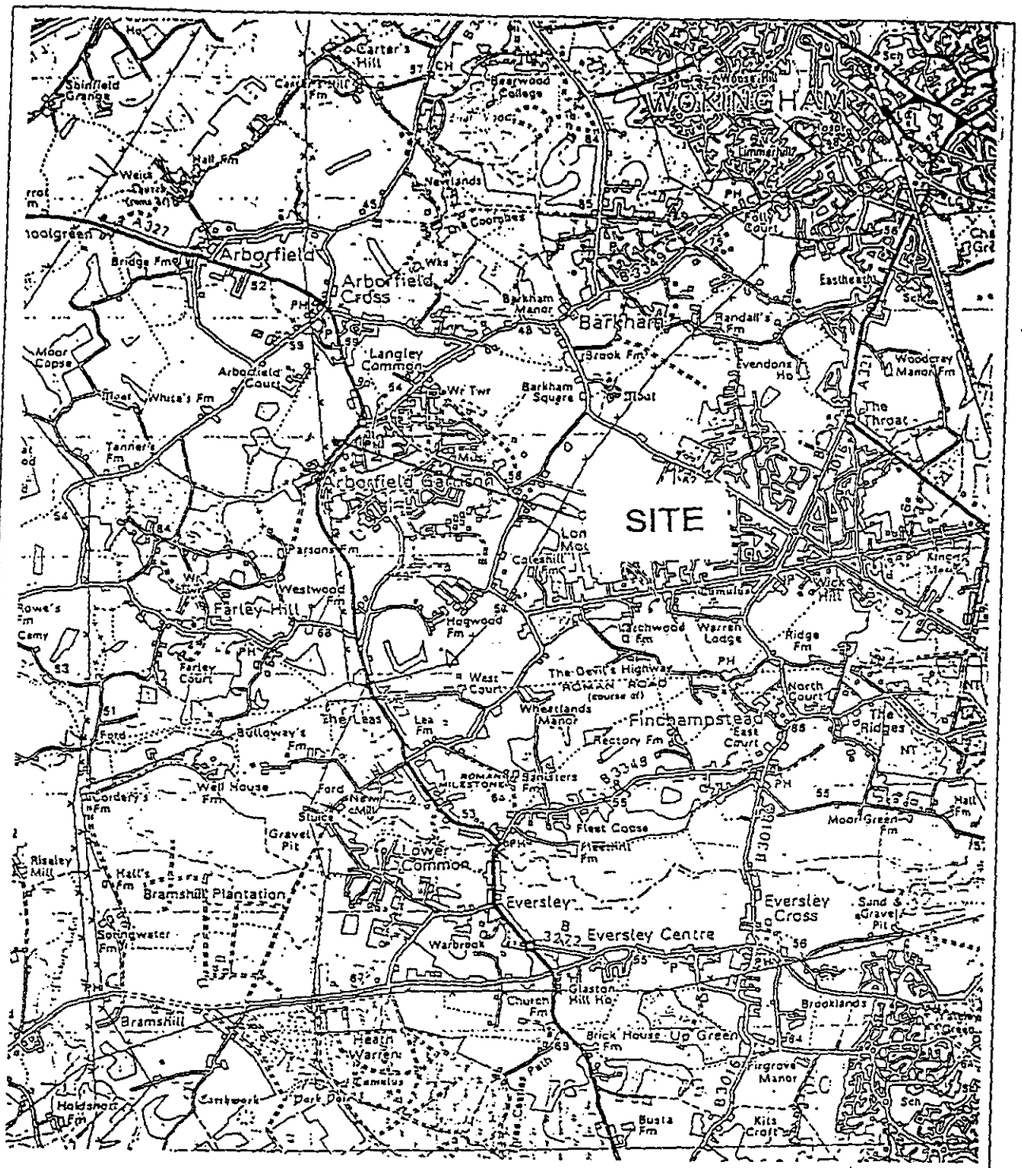

SCALE 1:50,000

AREA MAP

REPRODUCED FROM OS SHEET NO.151 1984 1:50,000
WITH THE PERMISSION OF THE CONTROLLER, H.M.S.O. © CROWN COPYRIGHT.
CROWN CASTLE UK LIMITED LICENCE NO. AL 52065A0001.

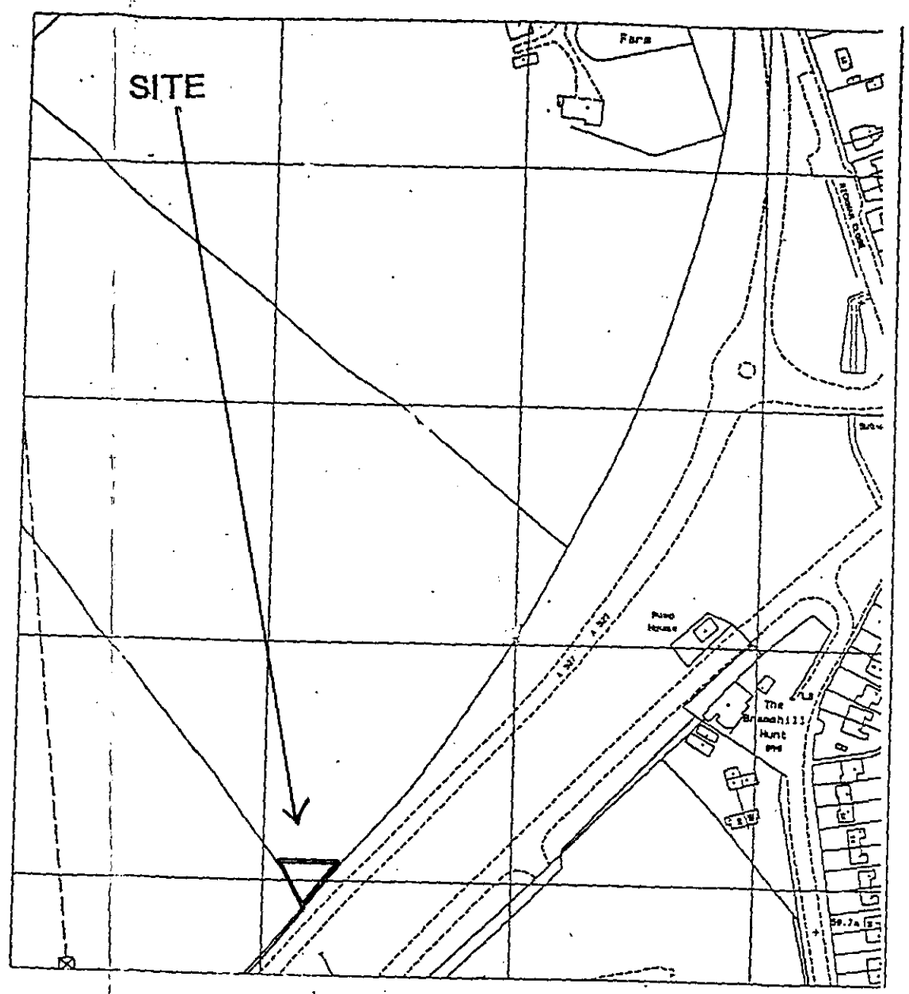

SITE MAP

REPRODUCED FROM OS SHEET NO.06963.1999. 1:2500
WITH THE PERMISSION OF THE CONTROLLER, H.M.S.O. CROWN COPYRIGHT.
CROWN CASTLE UK LIMITED LICENCE NO. AL 52065A0001.

PLANNING SERVICES	HPT
RDL	TLS
DC	ENF

SCALE 1:2500

09 APR 2002

COPIES TO	ACK:
	FILE:

CROWN CASTLE INTERNATIONAL

NOTES

1) DO NOT SCALE DIMENSIONS

2) ALL DIMENSIONS IN MILLIMETRES UNLESS OTHERWISE STATED

SITE ADDRESS:
DUCKS NEST FARM
READING ROAD
ARBORFIELD
BERKSHIRE
RG2 9PJ

ONE2ONE REF:	91241
CRANGE REF:	BRK119

2	Orange upgrade	08.09.00	LJM	
1	1st issue	06.11.99		
Iss	Revision	Date	Drn	App

© This drawing is the property of CROWN CASTLE UK LIMITED and may not be reproduced or disclosed to a third party in any form without written permission

A·P·T

DUCKS NEST FARM

AREA & SITE LOCATION MAPS

NGR: 476220/165900

Scale: AS SHOWN Date: 03.10.99
Drn: DCY App:

Drg No 17446.2.04/2 A

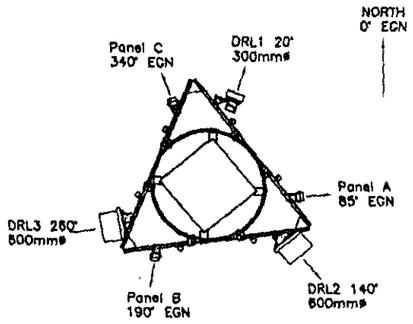

Hutchison Antenna/Dish mounting concept
@ 24.0m (Mean) Height
(Scale 1:125)

NORTH ELEVATION
(Scale 1:125)

boxed text indicates proposed work

HUTCHISON 3G

CUSTOMER REFERENCE No.: RG4010
CUSTOMER FINANCE No.: 00007534

ANTENNAE DETAILS:

ITEM	TYPE	HEIGHT MEAN	HEIGHT BASE	BRG
A1	UHF Panel 2212	24m	23m	190°
B1	UHF Panel 2212	24m	23m	85°
C1	UHF Panel 2212	24m	23m	340°

DRL DETAILS:

ITEM	SIZE	HEIGHT MEAN	HEIGHT BASE	BRG
DRL1	0.6m	24.3	X	260°
DRL2	0.6m	24.3	X	140°
DRL3	0.3m	24.2	X	20°

ALL BEARINGS MEASURED EAST OF GRID NORTH

C:\CCI_logo\ccic.jpg

NOTES
1) DO NOT SCALE DIMENSIONS EXCEPT FOR PLANNING PURPOSES
2) ALL DIMENSIONS IN MILLIMETRES UNLESS STATED OTHERWISE
3) ALL LEVELS ARE IN METRES AND RELATED TO A LOCAL DATUM

RECEIVED 6 MAR 2002* 6097

C:\cci_logo\rcl all details.jpg

C:\cci_logo\Gallifords.jpg

	Project No.			
	Project No.			
03	Project No. 27827 Amend - CCI Comments	12.12.01	DT	PL
02	Project No. 27827 ADDITIONAL ELEV'S ADDED	10.12.01	DT	PL
01	Project No. 27827 FIRST ISSUE	04.11.01	DT	PL
Iss	Revision	Date	Drn	App

This drawing is the property of CROWN CASTLE UK LIMITED and may not be reproduced or disclosed to a third party in any form without written permission

Crown Castle International.
PO Box 98. Warwick. CV34 6TN.
TEL: 01926 416000
FAX: 01926 416600

BT skyline number
N/A

00007534

HUTCHISON 3G

PROPOSED
INSTALLATION
NORTH ELEVATION

Scale. 1:125

CCI site no. 1491241

site name: DUCKS NEST FARM

EVERSLEY ROAD
ABORFIELD
BERKSHIRE
RG2 9PJ

Eastings and Northings
47630 / 16606

NGR: SU 7630 6606

Date: 04.11.01 Drn: DT

	directory	client_type	No_rev	App
P	17446_07_100_M03_03			PL

A3

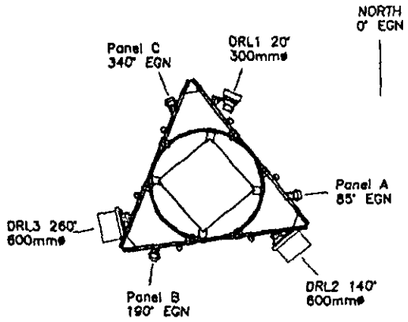

Hutchison Antenna/Dish mounting concept
@ 24.0m (Mean) Height
(Scale 1:125)

Please Note:
Trees Ommitted For Clarity

HUTCHISON 3G				
CUSTOMER REFERENCE No.: RG4010				
CUSTOMER FINANCE No.: 00007534				
ANTENNAE DETAILS:				
ITEM	TYPE	HEIGHT MEAN	HEIGHT BASE	BRG
A1	UHF Panel 2212	24m	23m	190°
B1	UHF Panel 2212	24m	23m	85°
C1	UHF Panel 2212	24m	23m	340°
DRL DETAILS:				
ITEM	SIZE	HEIGHT MEAN	HEIGHT BASE	BRG
DRL1	0.6m	24.3	X	260°
DRL2	0.6m	24.3	X	140°
DRL3	0.3m	24.2	X	20°
ALL BEARINGS MEASURED EAST OF GRID NORTH				

WEST ELEVATION
(Scale 1:125)

boxed text indicates proposed work

C:\CCI_logo\ccic.jpg

NOTES
1) DO NOT SCALE DIMENSIONS EXCEPT FOR PLANNING PURPOSES
2) ALL DIMENSIONS IN MILLIMETRES UNLESS STATED OTHERWISE
3) ALL LEVELS ARE IN METRES AND RELATED TO A LOCAL DATUM

FR.2302* 6097

C:\cci_logo\rcl all details.jpg

C:\cci_logo\Gallifords.jpg

Iss	Revision	Date	Drn	App
	Project No.			
	Project No.			
03	Project No. 27827 Amend - CCI Comments	12.12.01	DT	PL
02	Project No. 27827 ADDITIONAL ELEVS ADDED	10.12.01	DT	PL
01	Project No. 27827 FIRST ISSUE	04.11.01	DT	PL

This drawing is the property of CROWN CASTLE UK LIMITED and may not be reproduced or disclosed to a third party in any form without written permission

Crown Castle International.
PO Box 98. Warwick. CV34 6TN.
TEL: 01926 416000
FAX: 01926 416600

BT skyline number
N/A

00007534

HUTCHISON 3G

PROPOSED INSTALLATION
WEST ELEVATION

Scale. 1:125

CCI site no. 1491241

site name: DUCKS NEST FARM

EVERSLEY ROAD
ABORFIELD
BERKSHIRE
RG2 9PJ

Eastings and Northings
47630 / 16606

NGR: SU 7630 6606

Date: 04.11.01 Drn: DT

	directory	client_type	No_rev	App
P	17446_07_100_M03_03			PL

A3

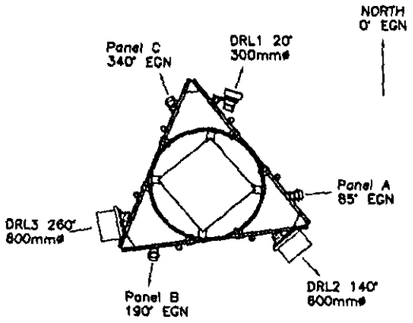

Hutchison Antenna/Dish mounting concept
@ 24.0m (Mean) Height
(Scale 1:125)

Please Note:
Trees Ommitted For Clarity

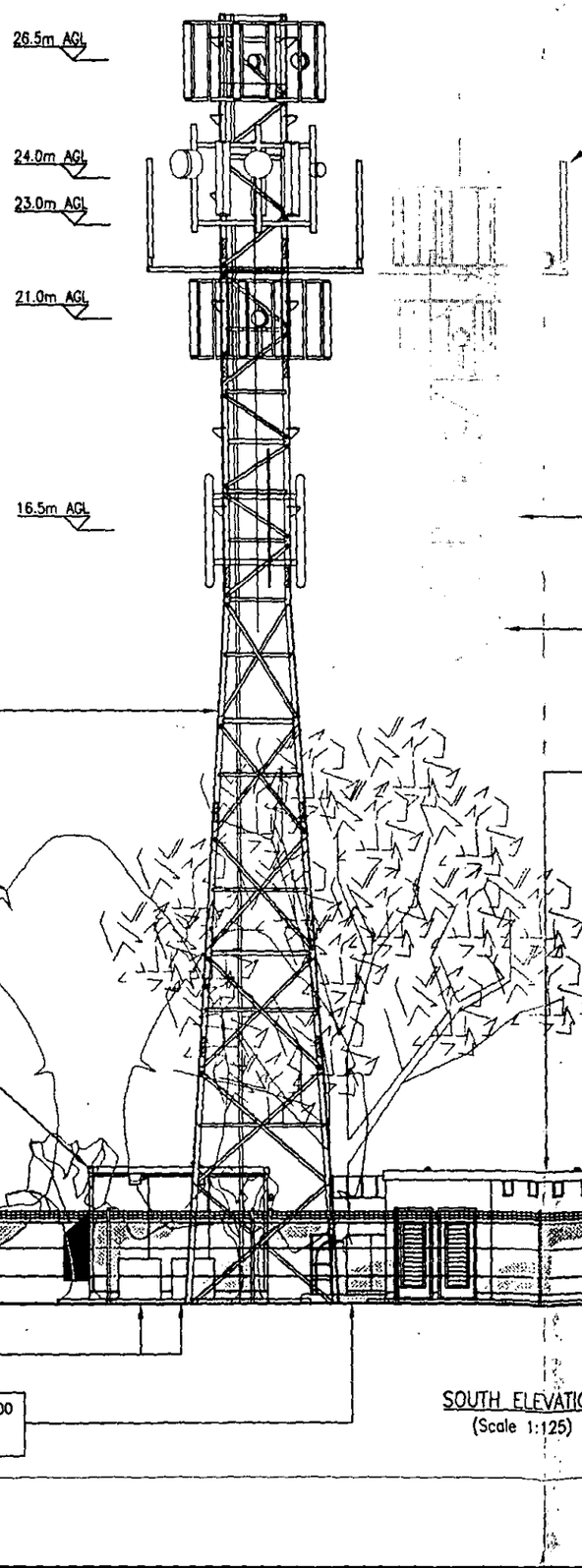

SOUTH ELEVATION
(Scale 1:125)

boxed text indicates proposed work

HUTCHISON 3G

CUSTOMER REFERENCE No.: RG4010
CUSTOMER FINANCE No.: 00007534

ANTENNAE DETAILS:

ITEM	TYPE	HEIGHT MEAN	HEIGHT BASE	BRG
A1	UHF Panel 2212	24m	23m	190°
B1	UHF Panel 2212	24m	23m	85°
C1	UHF Panel 2212	24m	23m	340°

ORL DETAILS:

ITEM	SIZE	HEIGHT MEAN	HEIGHT BASE	BRG
DRL1	0.6m	24.3	X	260°
DRL2	0.6m	24.3	X	140°
DRL3	0.3m	24.2	X	20°

ALL BEARINGS MEASURED EAST OF GRID NORTH

C:\CCI_logo\ccic.jpg

NOTES
1) DO NOT SCALE DIMENSIONS EXCEPT FOR PLANNING PURPOSES
2) ALL DIMENSIONS IN MILLIMETRES UNLESS STATED OTHERWISE
3) ALL LEVELS ARE IN METRES AND RELATED TO A LOCAL DATUM

02 APR 2002* 6097

C:\cci_logo\rci all details.jpg

C:\cci_logo\Gallifords.jpg

	Project No.			
	Project No.			
03	Project No. 27827 Amend - CCI Comments	12.12.01	DT	PL
02	Project No. 27827 ADDITIONAL ELEVS ADDED	10.12.01	DT	PL
01	Project No. 27827 FIRST ISSUE	04.11.01	DT	PL
Iss	Revision	Date	Drn	App

This drawing is the property of CROWN CASTLE UK LIMITED and may not be reproduced or disclosed to a third party in any form without written permission ©

Crown Castle International.
PO Box 98. Warwick. CV34 6TN.
TEL: 01926 416000
FAX: 01926 416600

BT skyline number
N/A

00007534

HUTCHISON 3G

PROPOSED
INSTALLATION
SOUTH ELEVATION

Scale. 1:125

CCI site no. 1491241

site name: DUCKS NEST FARM

EVERSLEY ROAD
ABORFIELD
BERKSHIRE
RG2 9PJ

Eastings and Northings
47630 / 16606

NGR: SU 7630 6606

Date: 04.11.01 Drn: DT

	directory	client_type	No_rev	App
P	17446_07_100_M03_03			PL

A3

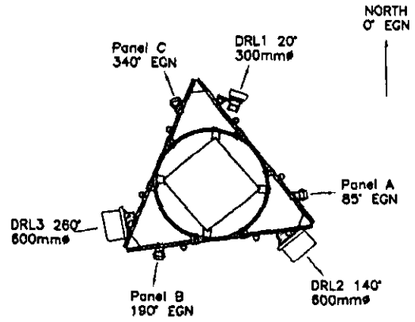

Hutchison Antenna/Dish mounting concept
@ 24.0m (Mean) Height
(Scale 1:125)

EAST ELEVATION
(Scale 1:125)

boxed text indicates proposed work

HUTCHISON 3G				
CUSTOMER REFERENCE No.: RG4010				
CUSTOMER FINANCE No.: 00007534				
ANTENNAE DETAILS:				
ITEM	TYPE	HEIGHT MEAN	HEIGHT BASE	BRG
A1	UHF Panel 2212	24m	23m	190°
B1	UHF Panel 2212	24m	23m	85°
C1	UHF Panel 2212	24m	23m	340°
DRL DETAILS:				
ITEM	SIZE	HEIGHT MEAN	HEIGHT BASE	BRG
DRL1	0.6m	24.3	X	260°
DRL2	0.6m	24.3	X	140°
DRL3	0.3m	24.2	X	20°
ALL BEARINGS MEASURED EAST OF GRID NORTH				

C:\CCI_logo\ccic.jpg

NOTES
1) DO NOT SCALE DIMENSIONS EXCEPT FOR PLANNING PURPOSES
2) ALL DIMENSIONS IN MILLIMETRES UNLESS STATED OTHERWISE
3) ALL LEVELS ARE IN METRES AND RELATED TO A LOCAL DATUM

03 APR 2002 6097

C:\cci_logo\rcl all details.jpg

C:\cci_logo\Gallifords.jpg

	Project No.			
	Project No.			
03	Project No. 27827 Amend – CCI Comments	12.12.01	DT	PL
02	Project No. 27827 ADDITIONAL ELEVS ADDED	10.12.01	DT	PL
01	Project No. 27827 FIRST ISSUE	04.11.01	DT	PL
Iss	Revision	Date	Drn	App

This drawing is the property of CROWN CASTLE UK LIMITED and may not be reproduced or disclosed to a third party in any form without written permission ©

Crown Castle International.
PO Box 98. Warwick. CV34 6TN.
TEL: 01926 416000
FAX: 01926 416600

BT skyline number
N/A

00007534

HUTCHISON 3G

PROPOSED
INSTALLATION
EAST ELEVATION

Scale. 1:125

CCI site no. 1491241

site name DUCKS NEST FARM

EVERSLEY ROAD
ABORFIELD
BERKSHIRE
RG2 9PJ

Eastings and Northings
47630 / 16606

NGR: SU 7630 6606

Date: 04.11.01 Drn: DT

P	directory	client_type	No_rev	App
	17446	_07_100_	M03_03	PL

A3

N
W E
S
INDICATIVE ONLY

Hutchison 3G equipment cabinets. 1No. 1300 x1200 x790mm High and 1No. 1300 x770 x790mm High.

Existing Vodafone Equipment cabin.

Existing Vodafone meter cabinet.

Existing One 2 One 22.5m high mast to be removed once proposed 27.5m high mast has been erected.

One 2 One Equipment Cabin.

Existing 1.8m high chainlink fence. To be made good

Meter cabinets

Existing Vodafone Cable ladder post to remain

450mm Deep Cable tray.

O/H cable gantry.

Existing One2one Cable ladder post to remain

Hutchison Meter cabinet

Hutchison 3g 450mm deep cable gantry.

BT

BT

BT Inspection Pit Covers

27.5m High Lattice SSTM Tower. Base to be 5m sq. CCI to confirm use of non-standard base

Existing Earthing Pits

Existing 3m wide access gate to site. Fitted with multi lock.

Orange 2H Installation to be relocated as shown on new foundation

Meter cabinets

Limit of Tree Overhang

Existing hedgerow to remain.

boxed text indicates proposed work

C:\CCI_logo\ccic.jpg

NOTES
1) DO NOT SCALE DIMENSIONS EXCEPT FOR PLANNING PURPOSES
2) ALL DIMENSIONS IN MILLIMETRES UNLESS STATED OTHERWISE
3) ALL LEVELS ARE IN METRES AND RELATED TO A LOCAL DATUM

09.APR.2002* 6097

C:\cci_logo\rcl all details.jpg

C:\cci_logo\Gallifords.jpg

	Project No.			
	Project No.			
03	Project No. 27827 Ammend-CCI Comments	12.12.01	DT	PL
02	Project No. 27827 ADDITIONAL ELEV'S ADDED	10.12.01	DT	PL
01	Project No. 27827 FIRST ISSUE	04.11.01	DT	PL
Iss	Revision	Date	Drn	App

This drawing is the property of CROWN CASTLE UK LIMITED and may not be reproduced or disclosed to a third party in any form without written permission ©

Crown Castle International.
PO Box 98. Warwick. CV34 6TN.
TEL: 01926 416000
FAX: 01926 416600

BT skyline number
N/A

00007534

HUTCHISON 3G

SITE PLAN
PROPOSED

Scale. 1:100

CCI site_no. 1491241

site name DUCKS NEST FARM

EVERSLEY ROAD
ABORFIELD
BERKSHIRE
RG2 9PJ

Eastings and Northings
47630 / 16606

NGR: SU 7630 6606

Date: 04.11.01 Drn: DT

directory	client_type	No_rev	App
17446_07_150_M03_03			PL

A3

09.APR.2002* 6097

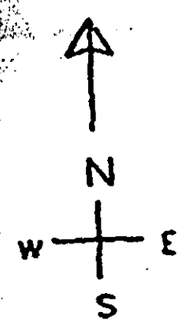

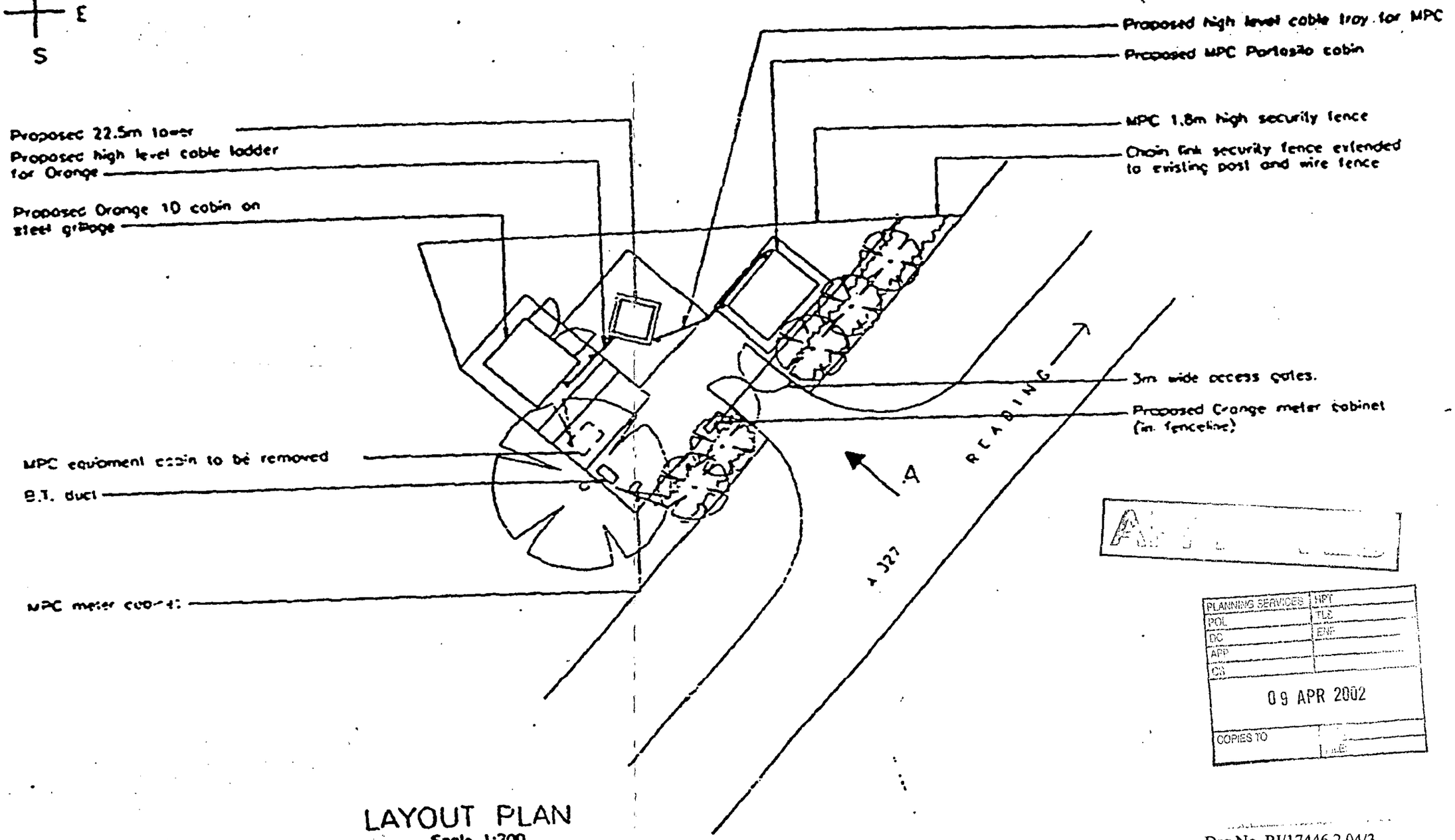

LAYOUT PLAN
Scale 1:200

Site location showing existing access route onto the A327

PLANNING SERVICES	HPT
POL	TLS
DC	ENF
APP	
CS	
09 APR 2002	
COPIES TO	

Drg No PJ/17446.2.04/3

08 MAR 2002 6697



This map is based upon Ordnance Survey material with the permission of Ordnance Survey on behalf of the Controller of HMSO. © Crown Copyright.
Unauthorised reproduction infringes Crown Copyright and may lead to prosecution or civil proceedings.Wokingham District Council Licence LA086134

Development Control Section, Environmental Services, Wokingham District Council.
18 March 2002

Scale: 1 : 2500

N
W E
S

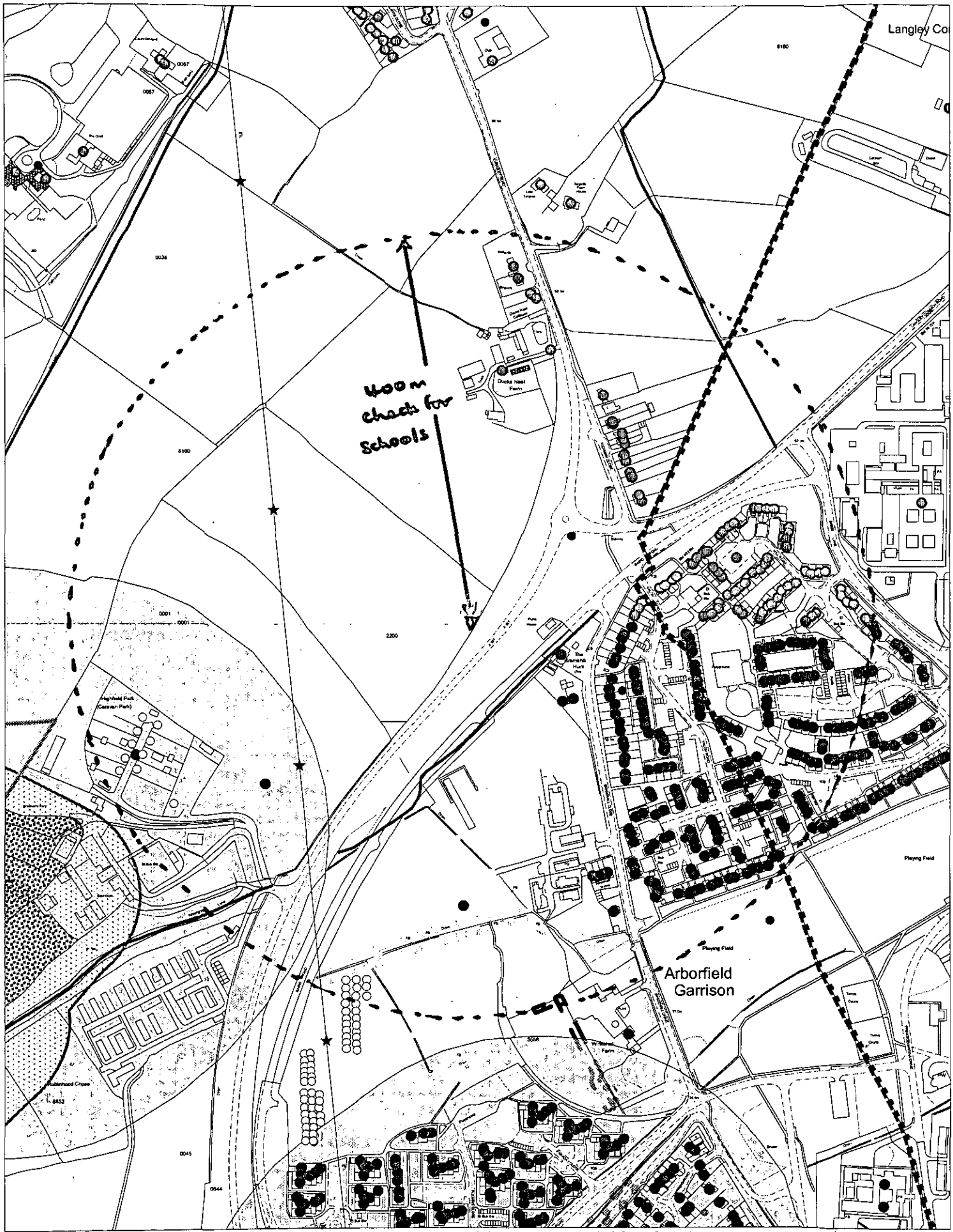

This map is based upon Ordnance Survey material with the permission of Ordnance Survey on behalf of the Controller of HMSO. © Crown Copyright.
Unauthorised reproduction infringes Crown Copyright and may lead to prosecution or civil proceedings.Wokingham District Council Licence LA086134

Development Control Section, Environmental Services, Wokingham District Council.
18 March 2002

Scale: 1 : 5000

N
W E
S