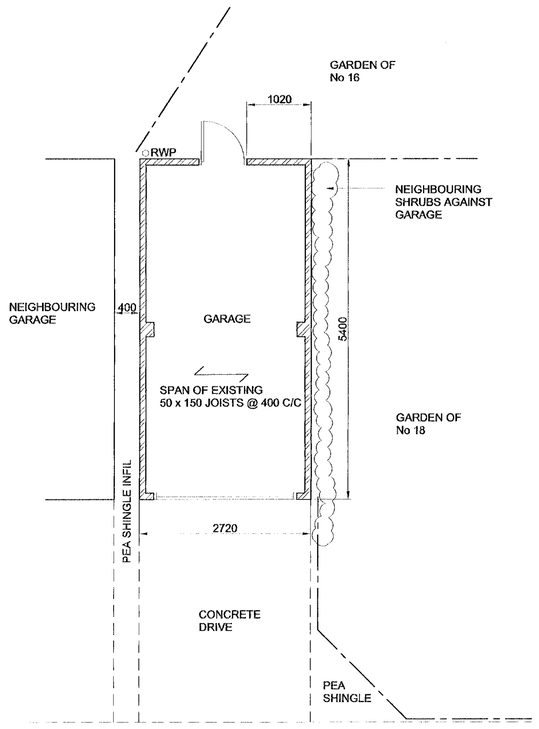

RECONSTRUCTION PLAN
SCALE 1:50

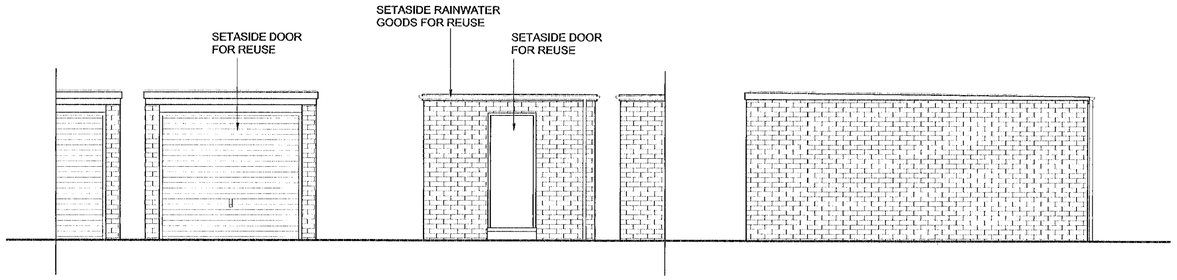

ELEVATIONS
SCALE 1:50

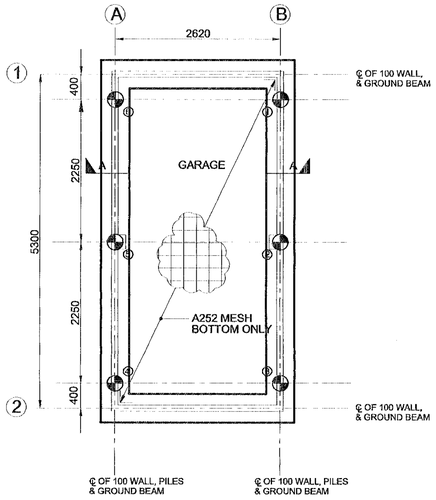

BEAM & PILE LAYOUT
SCALE 1:50

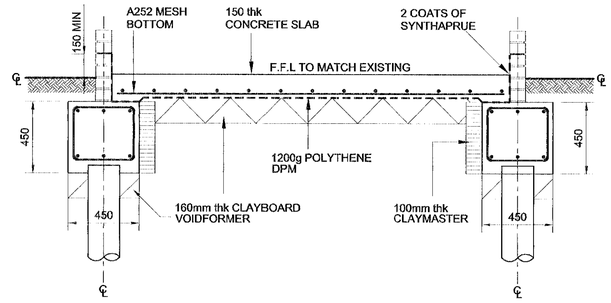

SITE PLAN
SCALE 1:50

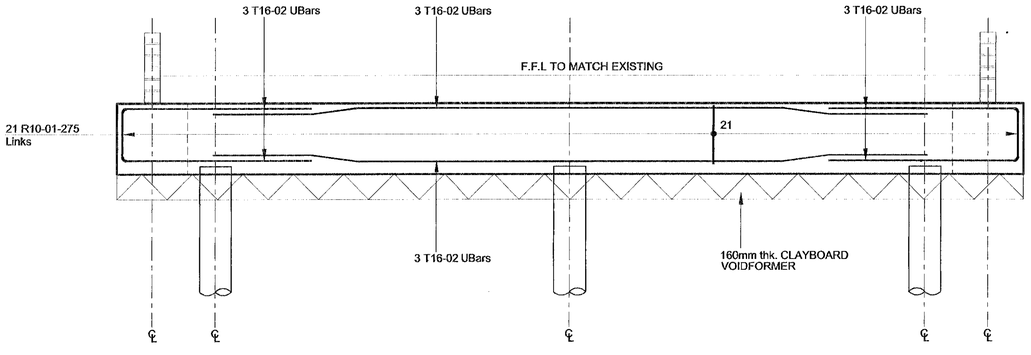

BEAM ON GRIDS A & B 1-2
SCALE 1:20

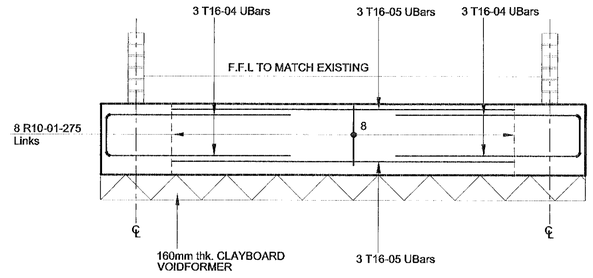

BEAM ON GRIDS 1 & 2 A-B
SCALE 1:20

GENERAL

DO NOT SCALE OFF THIS DRAWING.
ALL DIMENSIONS ARE TO BE CHECKED ON SITE. ANY DISCREPANCIES ARE TO BE NOTIFIED TO THE CONTRACT ADMINISTRATOR.
THIS DRAWING IS TO BE READ IN CONJUNCTION WITH ELLIS & BUCKLE STANDARD CONTRACT DOCUMENTATION REF : EB2 8 / 96 & ALL OTHER RELEVANT CONTRACT DOCUMENTATION AS LISTED IN THE CONTRACT SPECIFICS.
LAYOUT IS TO REMAIN UNALTERED UNLESS OTHERWISE AGREED WITH CONTRACT ADMINISTRATOR.

CONCRETE

ALL WORK TO BE IN ACCORDANCE WITHBS 8110.
ALL CONCRETE TO BE GRADE C35, AND TO HAVE CLASS 2 SULPHATE RESISTING CEMENT , AS DEFINED IN BS 8110 Pt 1 & BS 4027 .
WATER : CEMENT RATIO TO BE 0.60. (RATIO MAY CHANGE DEPENDING ON THE REQUIREMENTS OF BS 8110 Pt 1.)
MINIMUM CEMENT CONTENT TO BE 330 Kg / cu.m .
ALL CONCRETE TO BE VIBRATED.

PILES

PILE LOCATION AS PER PLAN.
PILES ARE TO BE DESIGNED BY OTHERS. CONTRACTOR TO PROVIDE SATISFACTORY CALC'S PRIOR TO THE COMMENCEMENT OF THE WORKS.
ALL PILING WORK IS TO BE DESIGNED AND INSTALLED IN ACCORDANCE WITH BS 8004 : 1986 SECTION 7 AND I.C.E 'SPECIFICATION FOR PILING AND EMBEDDED RETAINING WALLS'.
PILE REINFORCEMENT TO BE CUT AND BENT A MINIMUM OF 1000mm INTO SLAB OR BEAMS.
ALL PILES ARE TO HAVE A 50mm EMBEDMENT IN TO THE REINFORCED SLAB.
LAYOUT IS TO REMAIN UNALTERED UNLESS OTHERWISE AGREED BY THE CONTRACT ADMINISTRATOR.

REINFORCEMENT

COVER TO OUTERMOST REINFORCEMENT TO BE
35mm TOP OF BOTH & 35mm SIDE OF BOTH
35mm BOTTOM

ALL REINFORCEMENT DENOTED 'T' TO BE HIGH YIELD GRADE 460 COMPLYING WITH BS 4461.
ALL REINFORCEMENT DENOTED 'R' TO BE MILD

T10 LAPS TO BE 400mm MINIMUM.
T16 LAPS TO BE 625mm MINIMUM.

SAFE WORKING LOAD

SWL = 75kN

REV	DRAWN	DATE	DESCRIPTION

CLIENT
TOMLIN

21 JAN 2000 0410

SITE ADDRESS
16 JUPITER WAY
WOOSEHILL
WOKINGHAM
RG41 3GE

DRAWING TITLE
DEMOLISH &
RECONSTRUCT
GARAGE

Cunningham Ellis & Buckle
1st Fl. Design Office, Solent House
Solent Business Park, Whiteley
FAREHAM, Hants , PO15 7AF
Tel: 01489 567 760
Fax: 01489 565 817

SCALE
AS SHOWN

DRAWN BY
D.A.K

DATE
AUGUST 99

REFERENCE
041/757073

DRAWING No.
D1

REV.