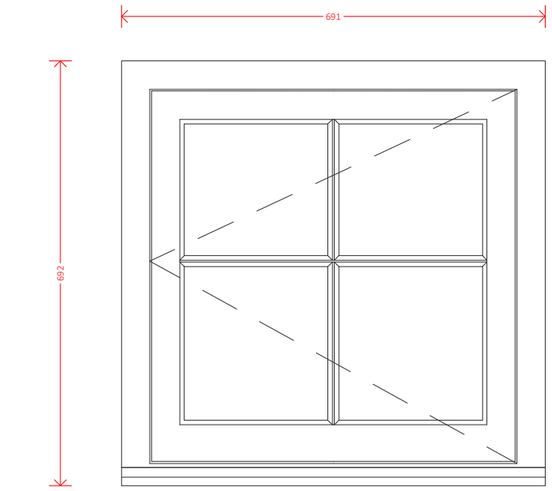

3 Window Elevation 1:10

Proposed Rear Elevation scale1:100

Two new windows are proposed within the property. The proposal is for heritage style timber windows with glazing bars with bead. Windows will be finished in a painted RAL colour.

SPECIFICATIONS:

Whole window U-value (Uw): 1.06 W/m²K
LCAA1–A3 Cradle to Gate: 75.05 kg CO_2 eq.
LCAA1–D Cradle to Grave:-11,066.19 kg CO_2 eq.
Security Testing: NPD
Acoustic Performance: NPD
Wind EN12210: NPD
Air Loss EN12207: NPD
Air Permeability EN14350.1: NPD
Water EN12208: NPD
Warranty: 10 Year – No Maintenance

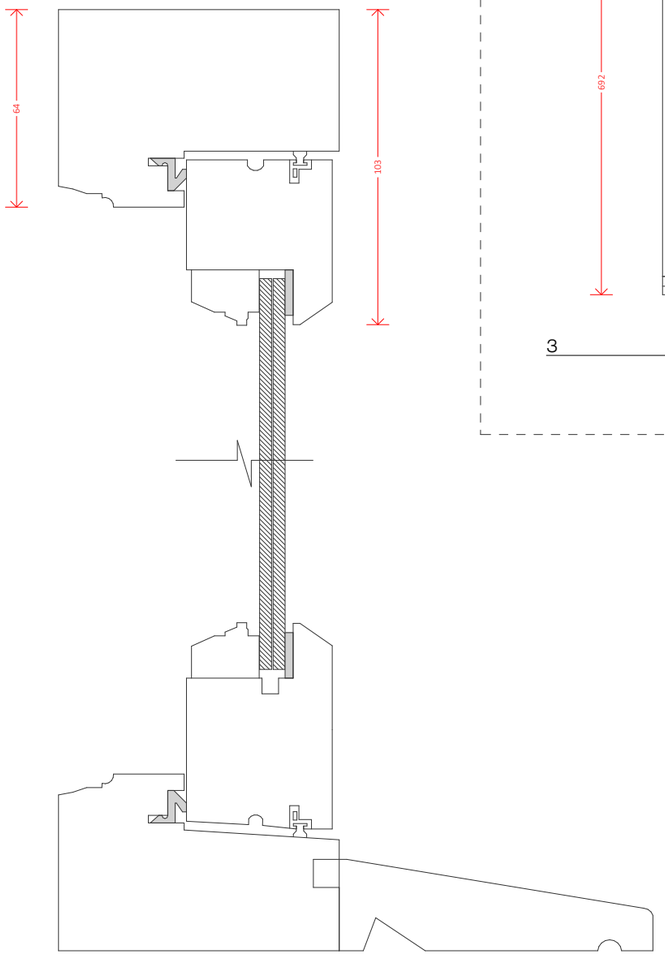

SECTION (ELEVATION)

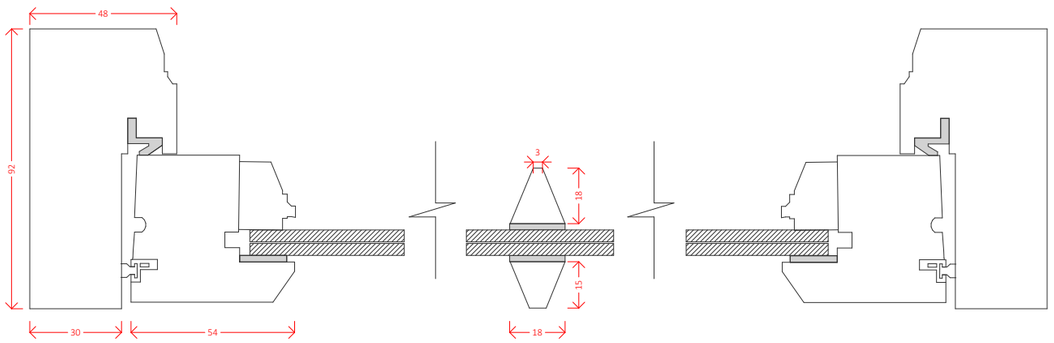

SECTION (TOP)

2 Window Profile Details 1:2

Issue date: 16 January 2026
Scale (1:100, 1:2, 1:10 @ A3)

Window Details- River Cottage
140 PC 01 revision 01- WIP

SIMON MACK ARCHITECTURE

© copyright Simon Mack Architecture Ltd 2026