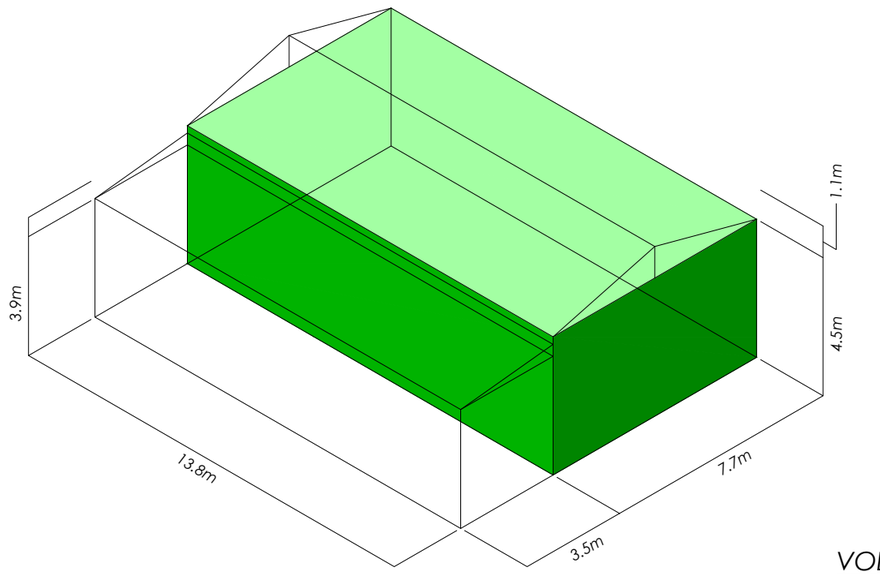

VOLUME 1

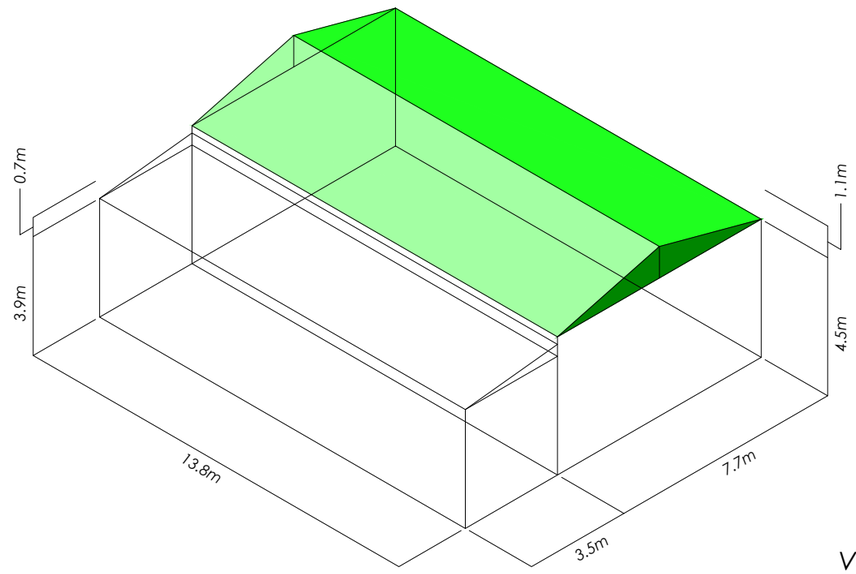

VOLUME 2

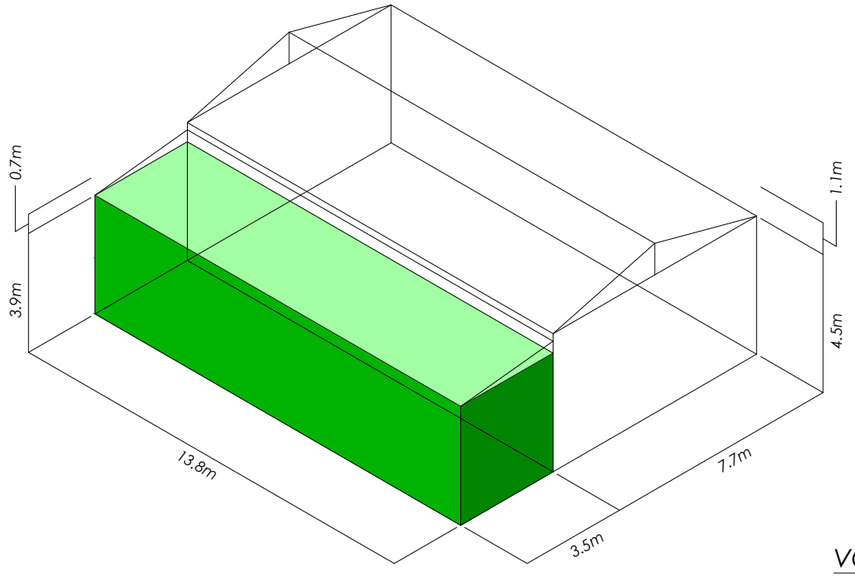

VOLUME 3

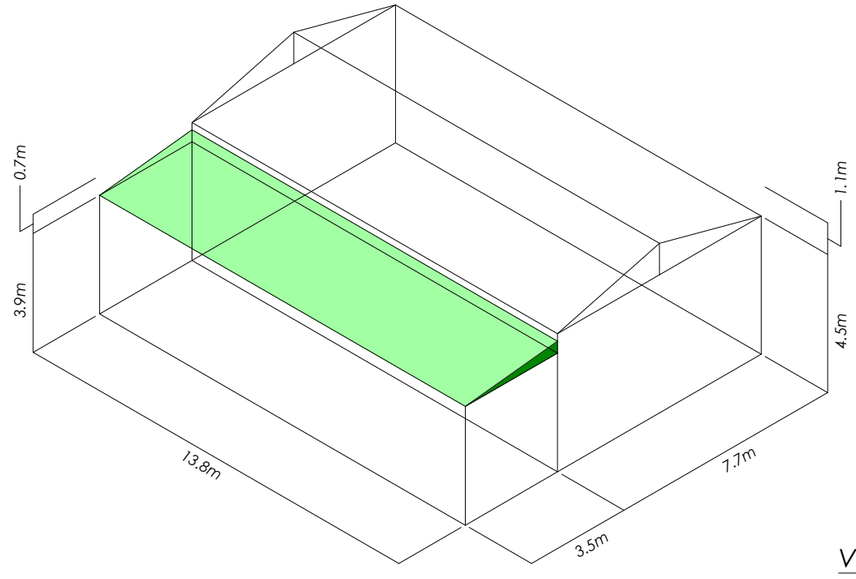

VOLUME 4

EXISTING BUILDING VOLUME

VOLUME 1 = 478m³
1 = 13.8 x 7.7 x 4.5

VOLUME 2 = 58m³
2 = 13.8 x 7.7 x 1.1 / 2

VOLUME 3 = 188m³
3 = 13.8 x 3.5 x 3.9

VOLUME 4 = 17m³
4 = 13.8 x 3.5 x 0.7 / 2

TOTAL VOLUME = 741m³

0 2 4 10

Scale (m)

Revisions

Client
Private Client

Project
Workshop Extension
Springfield
Trowe's Lane
Swallowfield
RG7 1RN

Title
Existing Building Volume Calculation

Status
Planning

Date
2026.09.01

Scale
1:200

Size
A3

Number
25.12-119

Revision
-

Spires Architects
9 Monks Way | Reading | RG30 3DP
Tel 07495 529905

This drawing is copyright and may not be reproduced in whole or part without written authority.