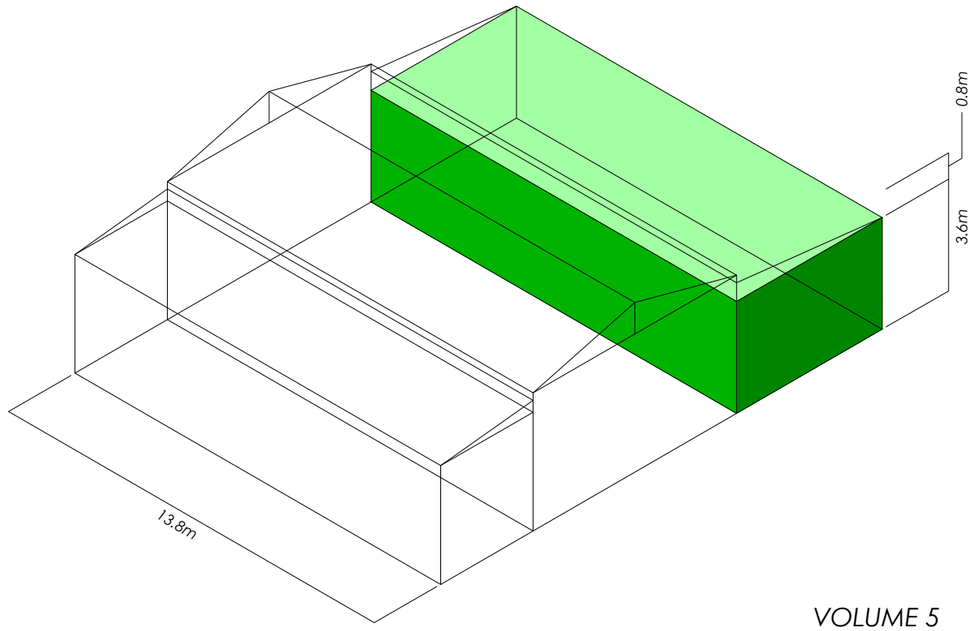

VOLUME 5

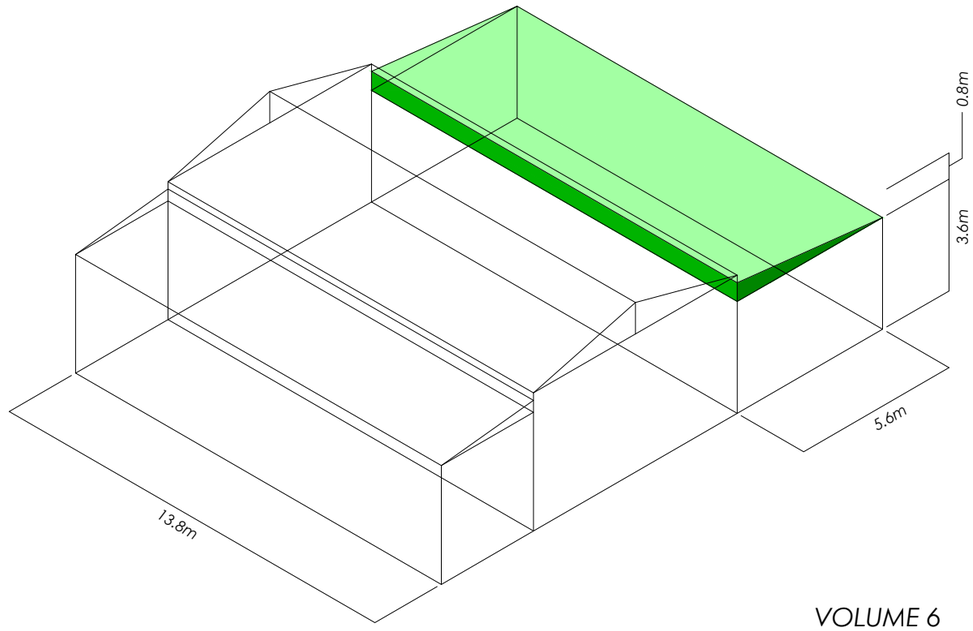

VOLUME 6

PROPOSED BUILDING VOLUME

EXISTING VOLUME = 741m³

VOLUME 5 = 328m³
5 = 13.8 x 6.6 x 3.6

VOLUME 6 = 36m³
6 = 13.8 x 6.6 x 0.8 / 2

TOTAL VOLUME = 1105m³

0 2 4 10
Scale (m)

Revisions

Client: Private Client

Project: Workshop Extension
Springfield
Trowe's Lane
Swallowfield
RG7 1RN

Title: Proposed Building Volume Calculation

Status: Planning

Date: 2026.09.01

Scale: 1:200

Size: A3

Number: 25.12-120

Revision: -

Spires Architects
9 Monks Way | Reading | RG30 3DP
Tel 07495 529905

This drawing is copyright and may not be reproduced in whole or part without written authority.