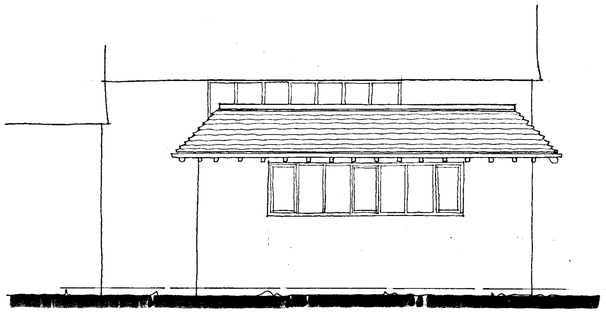

ELEVATION ONTO CARPARK.

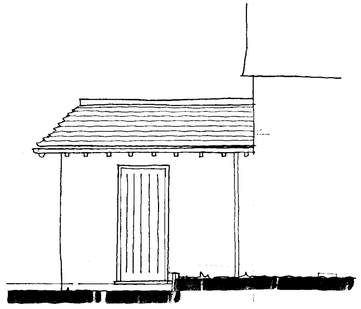

SIDE

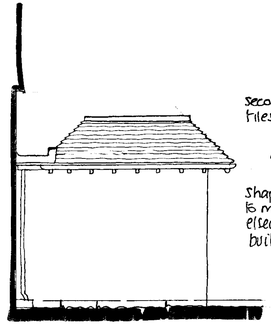

SIDE.

secondhand plain clay tiles and ridges

C.I. rain water goods.

Shaped rafter foot detail to match existing detail elsewhere on main building.

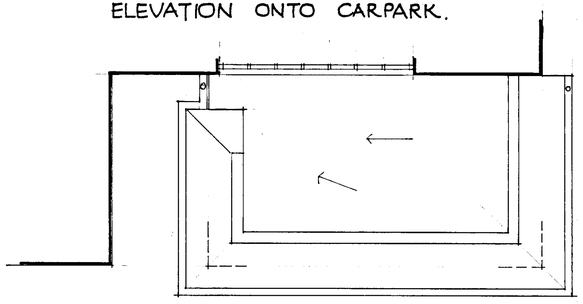

ROOF PLAN.

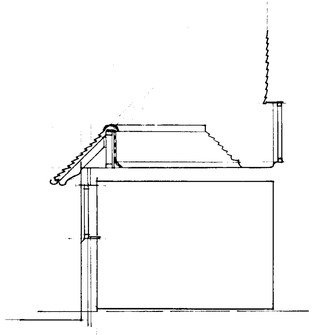

SECTION.

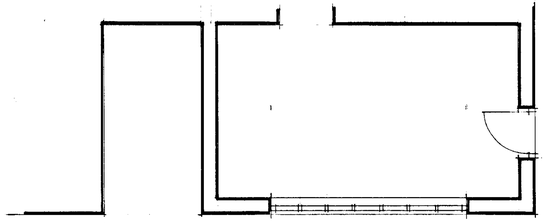

FLOOR PLAN.

APPROVED

20.JUN.2001 4006



rev A. 29.05.01 Minor amendments.

R.G. BUTLER & ASSOCIATES.
11 STRATHMORE DRIVE. CHARVIL. READING.
RG10 9QT. Tel/fax 0118 934 3040

PROPOSED PITCHED ROOF TO EXISTING THRIFT SHOP AT HOLME GRANGE SCHOOL HEATHLANDS ROAD. WOKINGHAM.

Scale 1:50	drg no 517/1 A
date May 2001	