MARK WELBY
CONSULTING ARBORISTS

Arboricultural Impact Assessment

58 Finchampstead Road, Wokingham, RG40 2NS

Reference: MW.20.0919.AIA
Client: Blueking Holdings Ltd
Date: 19 March 2024

Mark Welby DipArb(RFS), TechCert(ArborA), FArborA
01730 239 492 | mark@mwelby.com | www.mwelby.com
M Welby Ltd, trading as Mark Welby Consulting Arborists
Hampshire, UK

AA Registered CONSULTANT trees.org.uk

Arboricultural ASSOCIATION Fellow Member

Executive Summary

Trees are a consideration in this planning application for four dwellings. Therefore, this report has been drafted to provide the information required to enable the local planning authority to meet the duty placed upon them by section 197 of the Town and Country Planning Act (as amended, 2021).

Included are a BS5837:2012 compliant tree survey, arboricultural impact assessment, and tree protection strategy that includes a method statement and tree protection plan.

One tree and two groups are to be removed to facilitate the proposals. All are of low quality and value.

The new dwellings are situated outside the root protection areas of retained trees.

Provided the protection strategy is implemented as outlined, I believe this application is of low arboricultural impact, and thus acceptable.

Table of Contents

1. Instructions and Terms of Reference 2
Documents Supplied 2
Statutory Legislation 2
2. Tree Survey Scope & Methodology 3
3. Arboricultural Impact Assessment 4
Proposal 4
Tree Removals 4
Tree Surgery 4
Construction Impact 4
Supervision & Monitoring 4
Barrier Type 4
Service & Utility Provisions 4
Future Pressure 5
Summary 5
4. Arboricultural Method Statement 6
Phasing 6
Pre-start Audit/Meeting 7
Construction Exclusion Zone (CEZ) 7
Protection Barriers 8
Ground Protection 8
Site Induction 9
Tree Surgery 10
Installation of Underground Services 10
Fencepost/Hoarding Installation in RPA 11
5. Limitations of Use and Copyright. 12
Appendices 13
i. Tree Protection Barriers 14
ii. Tree Categories Explained 16
iii. Protection Plan 17

1. Instructions and Terms of Reference

1.1. In March 2024, I was instructed by Blueking Holdings Ltd to undertake a tree survey and to produce this report to accompany a planning application for four dwellings at 58 Finchampstead Road, Wokingham, RG40 2NS.

1.2. Following the recommendations of the British Standard[1], this report includes the necessary information to enable the local planning authority to meet the duty placed upon them by section 197 of the Town and Country Planning Act (as amended, 2021).

1.3. It demonstrates that the impact, both direct and indirect, of the proposal, has been assessed and where appropriate, mitigation, compensation and tree protection proposed.

1.4. Correct implementation of the tree protection specified within this report is critical for ensuring the retained trees are successfully protected throughout the construction process.

1.5. The assessment considers the impact of the proposal on the constraint presented by trees retained within the site, and those on adjacent land. Such impact can be caused directly through construction damage and indirectly from post-development resentment and pressure to detrimentally prune or remove the trees. The latter is often due to a poor juxtaposition between the proposal and the trees.

1.6. The root protection area (RPA) for each tree represents a minimum area in m^2 that shall be left undisturbed around each retained tree. This is initially represented by a circle but is fundamentally an area of rooting volume. This is often adjusted to account for constraints to root growth within the site (primarily highways and buildings). Recommendations are provided in the British Standard as to the protection of existing trees during the construction process. This is achieved by ensuring a tree protection strategy is implemented before any demolition or construction on site.

Documents Supplied

- Proposed: GA -2560- rev B.dwg
- Site survey: 27123cv-01.dwg

Statutory Legislation

1.7. According to Wokingham Borough Council's online service[2], there are no tree preservation orders on the site (checked at the time of writing), nor is the site within a conservation area.

[1] BS5837:2012 Trees in relation to design, demolition and construction

[2] https://experience.arcgis.com/

2. Tree Survey Scope & Methodology

2.1. Tree survey data can be found on the appended plan.

2.2. The tree survey has been carried out following the recommendations of The British Standard and the trees are assessed objectively and without reference to any site layout proposals. Categories are based on each tree's health and condition, together with an assessment of its life expectancy if its surroundings were to be unchanged.

2.3. The reference numbers of surveyed trees and groups of trees are shown on the tree reference plan, which is appended to this report and based on the supplied survey drawing. Stem locations within groups may be estimated, and indicative of canopy only.

2.4. The tree survey was carried out from ground level only, with the aid of binoculars as necessary, following the Visual Tree Assessment[3] (VTA) method.

2.5. Where trees are located on neighbouring land, an estimated appraisal of their quality and dimensions has been made.

2.6. Where stems or branches are obscured by ivy or other materials a full assessment of those parts will not be possible.

2.7. Tree heights were measured with a clinometer or estimated in relation to those measured.

2.8. Trunk diameters are measured at 1.5m above ground level, where this is not possible, then Figure C.1 of the British Standard is followed.

2.9. Tree canopies were markedly asymmetrical, and were measured (or estimated by pacing) in four directions using a laser measure. Symmetrical canopies are measured in one direction only, with dimensions in the remaining directions assumed to be similar. For the canopies of groups of trees, the maximum radius for each compass point is measured (more complicated groups will have further notes taken and an accurate representation will be shown on the plan).

2.10. All estimated dimensions are noted in the data.

[3] Mattheck, C. & Breloer, H., 1998. The Body Language of Trees: A Handbook for Failure Analysis. London:H.M.S.O.

3. Arboricultural Impact Assessment

Proposal

3.1. The plan is to replace the existing dwelling with four detached houses. The layout and location of which can be seen on the appended plan.

Tree Removals

3.2. One small cherry tree is to be removed (#61).

3.3. Two groups of shrubby plants are to be removed (#48 & 60)

3.4. They are listed on the appended plan and are all of low quality (category C). any loss that may be felt as a result of their removal could be mitigated through new planting within the site

Tree Surgery

3.5. There are no plans for any tree surgery work at this stage.

Construction Impact

3.6. All proposed construction work occurs outside the RPAs of retained trees.

Supervision & Monitoring

3.7. Some sites require more arboricultural involvement during the construction process than others. This is typically commensurate with the pressure on retained trees and the complexity of the tree protection strategy.

3.8. For this project, a pre-start meeting/tree protection audit before demolition starts is proposed.

3.9. It is my opinion that regular monitoring visits would not be necessary for this project.

Barrier Type

3.10. As the proposed construction work is comparatively 'low impact', the default British Standard tree protection specification seems somewhat onerous. Therefore, it is my opinion that an adequate level of protection can be provided with a lesser specification.

3.11. Alternative specifications can be found in Appendix i. TPF 2 or TPF 3 are proposed.

Service & Utility Provisions

3.12. There is adequate space to service the site whilst avoiding all RPAs.

Future Pressure

3.13. It can be seen from the appended plan that there is sufficient offset from the trees to provide some open space around the dwelling and allow construction without impact.

3.14. I have worked with the design team to achieve the subject layout and am confident that the proposed dwelling locations maximise the available space whilst not resulting in situations where excessive shade might bring forth requests to heavily prune or remove the retained trees.

Summary

3.15. Provided the tree protection strategy is implemented as outlined in the following method statement, it is my opinion that this application is of **low** arboricultural impact, and thus acceptable.

3.16. Should the council wish to see more onerous tree protection methods, this can be ensured via an appropriately worded planning condition and should not be the basis for a reason for refusal.

4. Arboricultural Method Statement

4.1. The tree protection on this site is subject to implementation as detailed in the following sections.

4.2. The recommendations of the British Standard have been applied where viable. Where deviations from the preferred approach are required, the impact on any retained trees is minimised through a combination of supervision from an arboriculturist and adherence to the associated method statement.

4.3. The strategy must be followed to avoid not only impact upon the trees but to adhere to any planning conditions, once permission is granted.

4.4. The information within this section must be passed to the site foreman and cascaded to all relevant personnel involved in the project.

4.5. Any questions about the content or its implementation shall be directed to **Mark Welby Consulting Arborists at 01730 239492** before action is taken.

4.6. A tree protection plan showing the types of tree protection and their locations is appended. It includes the tree survey data, existing site features and the approved construction. The plan must be read in conjunction with this method statement.

Phasing

4.7. It is essential that the following phasing is followed if trees are to be effectively protected throughout construction.

1	Tree removals
2	Installation of protection barriers (Appendix i: TPF 2 or 3)
3	Pre-start tree protection audit/meeting
4	Demolition & site clearance phase
5	Construction phase
6	Removal of tree protection barriers upon completion of work

Table 1: Timing of operations in relation to trees

4.9. The above has been drafted at the planning stage. Shall any of the protection measures prove incompatible with elements of the build program, contact the project arboriculturist to discuss options.

Pre-start Audit/Meeting

4.10. The most important step in the tree protection process: a meeting with the project arboriculturist and the site manager shall be undertaken to review the measures before any main construction work starts on site. Usually included as a specific item in any planning conditions.

4.11. It is an opportunity to discuss any conflicts with the approved AMS and to seek changes if necessary.

4.12. An auditable record is to be kept on file and forwarded to the LPA if required.

Construction Exclusion Zone (CEZ)

4.13. The CEZ is a root-sensitive area where construction activities are to be excluded. The default method of doing so is through the installation of tree protection barriers. If construction access is required in the CEZ then ground protection can be used to facilitate this.

4.14. It is the responsibility of everyone engaged in the construction process to respect the tree protection measures and observe the necessary precautions within and adjacent to them.

4.15. Inside the exclusion zone, the following shall apply:

- No mechanical excavation whatsoever;
- No excavation by any other means without arboricultural site supervision;
- No hand digging without a written method statement having first been approved by the project arboriculturist;
- No lowering of levels for any purpose (except removal of grass sward using hand tools);
- No storage of plant or materials;
- No storage or handling of any chemical including cement washings;
- No vehicular access (unless ground protection is installed);
- No fire lighting.

4.16. In addition to the above, further precautions are necessary adjacent to trees:

- No substances injurious to tree health, including fuels, oil, bitumen, cement (including cement washings), builder's sand, concrete mixing and other chemicals shall be stored or used within or directly adjacent to the protection area of retained trees;
- No fire shall be lit such that flames come within 5m of tree foliage.

4.17. Variations from the above may be specified in the following sections of this method statement. This is only acceptable where detailed and will typically be subject to supervision by the arboriculturist.

Protection Barriers

4.18. Barriers must be fit to exclude construction activity and appropriate to the degree and proximity of work around the retained tree(s). Barriers shall be maintained to ensure that they remain rigid and complete.

4.19. See Appendix *i* for barrier specifications.

4.20. On this project, types TPF 2 or TPF 3 are to be used.

Ground Protection

4.21. If required to facilitate access within the CEZ (or as shown on the appended tree protection plan), ground protection is to be installed. If not already included on the tree protection plan, it must be approved in writing by the local planning authority before implementation. The ground protection must be capable of supporting the expected loads and avoiding rutting, compaction and damage to the soil: as advised in section 6.2.3 of the British Standard.

GP1: Tree protection barriers and scaffold ground protection

GP2: Tree protection barriers & trackmat ground protection

4.22. Stages of ground protection installation:

1. If required, dismantle barriers and re-erect them to protect any newly exposed CEZ not to be covered by ground protection;
2. Any shrubs, saplings or trees to be removed, are to be cut or ground out to just below ground level rather than grubbed or winched out, which can damage the roots of retained trees;
3. Lay woven geotextile over the existing ground surface by hand;
4. Cover the area with a compressible layer (200mm of woodchip, for example), using hand tools only;

5. Cover compressible layer with side butting scaffold boards, plywood boards of proprietary trackway/trackmats;
6. Confirm surface is acceptable for use with the project arboriculturist;
7. Area ready for construction access;
8. Any scaffolding required within the area will be erected with the uprights placed on spreader boards;
9. The boarding will be left in place until the construction works are finished.

4.23. A single thickness of boarding laid on the soil surface will provide sufficient protection for pedestrian loads. However, for wheeled or tracked construction traffic movements within the RPA, ground protection will involve the use of temporary geocell/cellular confinement systems, reinforced concrete slabs or track-board systems details of which are to be specified by the project engineer and approved for use by the project arboriculturist and local authority before construction commences.

4.24. Track-boards can be sourced from Trakmats Europe Ltd, 0845 6435388, www.trakmatseurope.com, or groundguards.com

4.25. There is to be no excavation within the ground protection area whatsoever. This includes the installation of services and associated utilities, without prior approval.

Site Induction

4.26. All site staff are to be briefed on the tree protection strategy for the site as part of the general site induction procedure. This can be carried out by the site manager once he has been briefed by the project arboriculturist.

4.27. In general, this will include the following:

1. Explanation of the purpose of the tree protection barriers and any ground protection
2. Explanation of the demolition procedures near trees
3. Explanation of the sensitive/supervised excavation areas
4. What to do if access is needed within a protected area for any reason
5. What to do if damage occurs to any tree protection barriers and how to contact the project arboriculturist if necessary.

Tree Surgery

4.28. Should any pruning work be required, the following must be adhered to once any requisite permissions are obtained.

4.29. All work will be carried out under BS3998[4] industry best practice and in line with any works already agreed upon with the council.

4.30. The statutory protection[5] [6] will be adhered to. If further advice is required, particularly if bats are discovered during tree work, it will be obtained from Natural England or other competent persons and recommendations adhered to.

4.31. The stumps of any trees removed from within the Construction Exclusion Zone or the RPAs of retained trees will be either cut flush to ground level and left in situ or ground out using a stump grinder. They will not be winched out.

4.32. All operations shall be carefully carried out to avoid damage to the trees being treated or neighbouring trees. No trees to be retained shall be used for anchorage or winching purposes.

Installation of Underground Services

4.33. Mechanical trenching for the installation of underground apparatus and drainage severs any roots present and can change the local soil hydrology in a way that adversely affects the health of the tree. For this reason, particular care must be taken in the routeing and methods of installation of all underground apparatus. Wherever possible, apparatus must be routed outside RPAs. Where this is not possible, it is preferable to keep the apparatus together in common ducts. Inspection chambers shall be sited outside the RPA.

4.34. Where underground apparatus is to pass within the RPA, detailed plans showing the proposed routeing must be drawn up in conjunction with the project arboriculturist. In such cases, trenchless insertion methods shall be used: Microtunnelling, Surface-launched directional drilling, Pipe ramming or Impact moling (see BS5837:2012 Table 3), with entry and retrieval pits being sited outside the RPA. Provided that roots can be retained and protected, excavation using hand-held tools might be acceptable for shallow service runs. If this is the case, the following methodology must be followed:

[4] *BS3998:2010- Recommendations for Tree Work.* London: British Standards Institute

[5] *Wildlife and Countryside Act.* (1981) London: HMSO.

[6] *Conservation of Habitats and Species Regulations (2017)* London: HMSO.

4.35. Stages for installing services:

1. Contact project arboriculturist to hold pre-start site meeting and 'toolbox' talk before starting work.
2. Remove just enough tree protection fencing to allow access to the area and facilitate trenching.
3. Remove any surface vegetation or existing hard surfaces using hand tools.
4. Using an air-pick excavate the trench, keeping to the minimum dimensions required.
5. Roots occurring in clumps of 25 mm diameter and over are encountered they will be retained and kept damp by covering with hessian (re-wetted as required). If required, these shall be severed only following consultation with an arboriculturist; as such roots might be essential to the tree's health and stability.
6. Feed in services.
7. Backfill the trench with 200-300mm depth of excavated soil, or a mixture of excavated and imported topsoil to BS3882: 2015, firming down with heels.
8. Repeat step 7 until the trench is filled.
9. Re-erect tree protection fencing as per the approved plan.

4.36. The method of excavation above, for trenching within RPAs, is using air excavation. This tool utilises compressed air to remove soil from around tree roots causing minimal damage and can be run off a typical site compressor. I can provide details of contractors supplying air excavation services if required.

4.37. Alternatively, trenchless technology, such as thrust boring can be used in some instances and is particularly effective as it can pass directly under the tree, at a depth which is likely to avoid almost all impact on the roots of the subject tree. As no access/thrust pits will be located within the RPAs of the subject trees, the need for arboricultural supervision is limited.

4.38. Reference can be made to NJUG Vol 4[7] for guidance, but any approach must be approved by the project arboriculturist and brought to the attention of the local authority tree officer.

Fencepost/Hoarding Installation in RPA

4.39. Stages for installing wooden posts:

No plant machinery is to be used in the area for whatever reason

1. Remove TPF to allow access to the area. If working inside the tree's RPA, ground protection boarding must be used to avoid compaction and contamination of the root zone.

7 National Joint Utilities Group. (2010). Volume 4: NJUG Guidelines For The Planning, Installation And Maintenance Of Utility Apparatus In Proximity To Trees (Issue 2) – Operatives Handbook. NJUG.

2. Dig postholes using hand tools, avoiding damage to the protective bark covering larger roots. Roots smaller than 25mm in diameter may be pruned back using either secateurs or a hand saw, leaving a clean cut.
3. Damage or severance of roots above 25mm diameter must be avoided. If roots of this size are discovered, the hole shall be relocated. If there are a large number of such roots it may be necessary to relocate the hole by half a fence panels length and adjust the fence panels accordingly.
4. Line holes with non-porous lining, for example, a durable polyethene bag.
5. Insert post and fill post-hole with concrete to just below ground level.
6. Trim polyethene to ground level and fill with clean topsoil.
7. Reinstall TPF as approved.

5. Limitations of Use and Copyright.

Copyright M Welby Ltd trading as Mark Welby Consulting Arborists. All rights reserved.

No part of this report may be copied or reproduced by any means without prior written permission from M Welby Ltd. If you have received this report in error, please destroy all copies in your possession or control and notify M Welby Ltd. This report has been prepared for the exclusive use of the commissioning party and unless otherwise agreed in writing by M Welby Ltd, no other party may use, make use of or rely on the contents of the report. No liability is accepted by M Welby Ltd for any use of this report, other than for the purposes for which it was originally prepared and provided. Opinions and information provided in the report are based on M Welby Ltd using due skill, care and diligence in the preparation of the same and no explicit warranty is provided as to their accuracy. It shall be noted, and it is expressly stated that no independent verification of any of the documents or information supplied to M Welby Ltd. has been made.

Appendices

Intentionally blank

i. Tree Protection Barriers

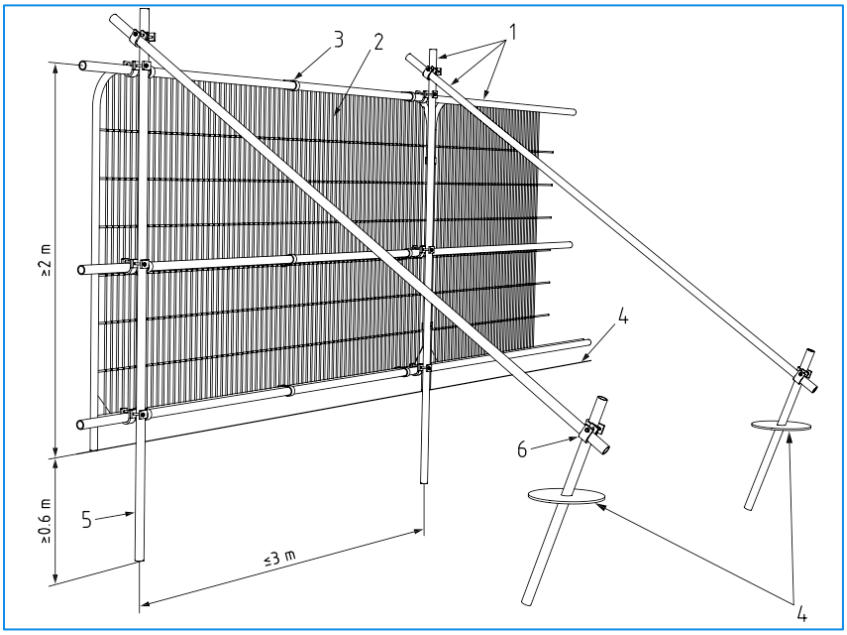

1 Standard scaffold poles
2 Heavy gauge 2 m tall galvanised tube and welded mesh infill panels
3 panels secured to up rights and cross members with wire-ties
4 ground level
5 uprights driven into the ground until secure (minimum depth 0.6 m)
6 Standard scaffold clamps

TPF1: Default specification for protective barrier (Fig 2 from BS5837:2012)

TPF 2: Alternative fencing option: scaffold uprights with backstay

TPF 3:Alternative fencing option: on boots with backstay

TPF 4: Plastic barrier for low intensity areas of construction

TPF 5: Chain-link for low intensity areas on large projects

ii. Tree Categories Explained

BS5837:2012 Table 1 -**Cascade chart for tree quality assessment**			
Category and definition	**Criteria (including subcategories where appropriate)**		
Trees unsuitable for retention (see Note)			
Category U Those in such a condition that they cannot realistically be retained as living trees in the context of the current land use for longer than 10 years	*Trees that have a serious, irremediable, structural defect, such that their early loss is expected due to collapse, including those that will become unviable after removal of other category U trees (e.g. where, for whatever reason, the loss of companion shelter cannot be mitigated by pruning) *Trees that are dead or are showing signs of significant, immediate, and irreversible overall decline *Trees infected with pathogens of significance to the health and/or safety of other trees nearby, or very low quality trees suppressing adjacent trees of better quality *NOTE Category U trees can have existing or potential conservation value which it might be desirable to preserve; see **4.5.7.***		
	1 Mainly arboricultural qualities	**2 Mainly landscape qualities**	**3 Mainly cultural values, including conservation**
Trees to be considered for retention			
Category A **Trees of high quality** with an estimated remaining life expectancy of at least 40 years	Trees that are particularly good examples of their species, especially if rare or unusual; or those that are essential components of groups or formal or semi-formal arboricultural features (e.g. the dominant and/or principal trees within an avenue)	Trees, groups or woodlands of particular visual importance as arboricultural and/or landscape features	Trees, groups or woodlands of significant conservation, historical, commemorative or other value (e.g. veteran trees or wood-pasture)
Category B **Trees of moderate quality** with an estimated remaining life expectancy of at least 20 years	Trees that might be included in category A, but are downgraded because of impaired condition (e.g. presence of significant though remediable defects, including unsympathetic past management and storm damage), such that they are unlikely to be suitable for retention for beyond 40 years; or trees lacking the special quality necessary to merit the category A designation	Trees present in numbers, usually growing as groups or woodlands, such that they attract a higher collective rating than they might as individuals; or trees occurring as collectives but situated so as to make little visual contribution to the wider locality	Trees with material conservation or other cultural value
Category C **Trees of low quality** with an estimated remaining life expectancy of at least 10 years, or young trees with a stem diameter below 150mm	Unremarkable trees of very limited merit or such impaired condition that they do not qualify in higher categories	Trees present in groups or woodlands, but without this conferring on them significantly greater collective landscape value; and/or trees offering low or only temporary/transient landscape benefits	Trees with no material conservation or other cultural value

iii. Protection Plan

Plan on following page

BS5837 Tree Survey: Trees & Groups to be Retained

Retained Trees / Groups

Ref	Species	Common Name	Height	Stem Diameter	Canopy NESW	Crown Clearance	Age Class	Observations	Tree Surgery	Est. Remaining Contribution	Date Surveyed	No.	BS Cat
02	Taxus baccata	English yew	9m	300mm; 300mm	4 N 2 E 4 S 4 W	1m	Early-Mature	Fair overall Physiological and Structural condition.		10 Years	22/9/2020	1	C1
07	Fagus sylvatica	Common beech	15m	260mm; 260mm; 260mm	1 N 3 E 4 S 3 W	1m	Early-Mature	Multi-stemmed ivy clad		10 Years	22/9/2020	1	C1
08	Pyrus sp.	Pear	10m	340mm	2 N 3 E 4 S 4 W	3m	Mature	Fair overall Physiological and Structural condition. Low landscape value.		10 Years	22/9/2020	1	C2
10	Acer pseudoplatanus	Sycamore	12m	300mm; 300mm	2.5 N 3 E 4 S 4 W	4m	Early-Mature	Ivy clad. Poor form.		10 Years	22/9/2020	1	C1
12	Ilex aquifolium	Common holly	12m	300mm; 250mm	3.5 N 3.5 E 3.5 S 3.5 W	3m	Early-Mature	Limited wider landscape value.		10 Years	22/9/2020	1	C1
13	Ilex aquifolium	Common holly	4m	120#mm			Early-Mature	Driveside hedge. Includes laurel		10 Years	22/9/2020	1	
19	Salix caprea	Goat willow	11m	200mm; 200mm; 200mm	7 N 7 E 7 S 7 W	4m	Early-Mature	Group of off-site stems	Cut back to boundary	10 Years	22/9/2020	1	C1
20	Quercus robur	Pedunculate oak	19m	580mm	8.5 N 8.5 E 8.5 S 8.5 W	6m	Mature	Good overall Physiological and Structural condition.		40 Years	22/9/2020	1	A2
21	Quercus robur	Pedunculate oak	19m	540#mm	8.5 N 5 E 8.5 S 5 W	6m	Mature	Good overall Physiological and Structural condition.		40 Years	22/9/2020	1	A2
22	Quercus robur	Pedunculate oak	17m	540#mm	8 N 6 E 8 S 3 W	3m	Mature	Fair overall Physiological and Structural condition. Weaker than adjacent trees. Broken branch hung up in crown	Remove broken branch. Sever ivy at base	20 Years	22/9/2020	1	B2
23	Nothofagus sp.	Southern beech	13m	500mm; 500mm	5 N 7 E 7 S 2 W	3m	Mature	Two distinct stems. Each splits at <1m. Decay and dysfunction to Eastern stem at base.	Remove tree prior to development.	0 Years	22/9/2020	1	U
24	Quercus robur	Pedunculate oak	18m	670#mm	11 N 8 E 11 S 8 W	2.5m	Mature	Good overall Physiological and Structural condition.		40 Years	22/9/2020	1	A1
26	Salix fragilis	Crack willow	13m	500mm	7 N 5 E 5 S 5 W	4m	Mature	Decayed at base and collapsed/leaning into adjacent hornbeam.	Remove willow and hornbeam	0 Years	22/9/2020	1	U
28	Carpinus betulus	Hornbeam	9m	300#mm	7 N 7 E 7 S 7 W	1m	Mature	Old hedge remnant. Now becoming established as trees.		10 Years	22/9/2020	1	C2
33	Salix caprea	Goat willow	12m	370#mm	6 N 6 E 6 S 6 W	2m	Mature	Fair overall Physiological and Structural condition. Off-site and inaccessible- dimensions estimated.		20 Years	22/9/2020	1	B2
34	Fraxinus excelsior	Common ash	17m	580mm	7 N 7 E 7 S 7 W	2.5m	Mature	Fair overall Physiological and Structural condition.		20 Years	22/9/2020	1	B1
35	Quercus robur	Pedunculate oak	16m	650#mm	6 N 8 E 9 S 7 W	6m	Mature	Good overall Physiological and Structural condition. Diameter estimated as stem inaccessible. Off-site and inaccessible- dimensions estimated.		40 Years	22/9/2020	1	A1
36	Quercus robur	Pedunculate oak	15m	400#mm	4 N 4 E 4 S 4 W	4m	Early-Mature	Fair overall Physiological and Structural condition. Off-site and inaccessible- dimensions estimated.		20 Years	22/9/2020	1	B2
37	Quercus robur	Pedunculate oak	15m	400#mm	4 N 4 E 4 S 4 W	4m	Early-Mature	Fair overall Physiological and Structural condition. Off-site and inaccessible- dimensions estimated.		20 Years	22/9/2020	1	B2
38	Quercus robur	Pedunculate oak	17m	550#mm	6 N 6 E 6 S 6 W	4m	Early-Mature	Good overall Physiological and Structural condition. Off-site and inaccessible- dimensions estimated.		40 Years	22/9/2020	1	A2
47	Betula pendula	Silver birch	15m	410mm	6 N 6 E 3 S 6 W	4m	Mature	Fair overall Physiological and Structural condition.		20 Years	22/9/2020	1	B2
50	Fagus sylvatica	Common beech	17m	690mm	7 N 7 E 7 S 7 W	3m	Mature	Good overall Physiological and Structural condition.		40 Years	22/9/2020	1	B1
51	Larix decidua	European larch	18m	450mm	4 N 4 E 4 S 4 W	4m	Mature	Fair overall Physiological and Structural condition.		20 Years	22/9/2020	1	B2
52	Fraxinus excelsior	Common ash	15m	490mm	6 N 3 E 6 S 6 W	5m	Mature	Competing with larch. Deadwood throughout.		10 Years	22/9/2020	1	C1
53	Acer pseudoplatanus	Sycamore	14m	350mm	4 N 5 E 4 S 4 W	3m	Early-Mature	Fair overall Physiological and Structural condition.		20 Years	22/9/2020	1	C2
54	Carpinus betulus	Hornbeam	8m	240#mm	4 N 4 E 8 S 4 W	2m	Early-Mature	Small with limited wider landscape value.		10 Years	22/9/2020	1	C1
55	Carpinus betulus	Hornbeam	12m	450mm; 250mm	6 N 6 E 8 S 6 W	3m	Mature	Defoliation. Bark wounds and necrosis at base		10 Years	22/9/2020	1	C1
56	Crataegus monogyna	Common hawthorn	8m	200mm; 200mm; 200mm	2.5 N 2.5 E 2.5 S 2.5 W	3m	Mature	Poor form. Heavily ivy clad		10 Years	22/9/2020	1	C1
59	X Cupressocyaris leylandii	Leyland cypress	8m	380mm	3 N 3 E 3 S 3 W	1m	Early-Mature	Ivy becoming dominant. Small with limited wider landscape value.		10 Years	22/9/2020	1	C1
62	Quercus robur	Pedunculate oak	15m	500#mm	2 N 4 E 4 S 4 W	4m	Early-Mature	Fair overall Physiological and Structural condition. Off-site and inaccessible- dimensions estimated. Location estimated		20 Years	13/3/2024	1	B2
63	Taxus baccata	English yew	14m	410mm	5 N 5 E 4 S 4 W	1m	Mature	Fair overall Physiological and Structural condition. Not plotted on survey base plan- location estimated.		40 Years	13/3/2024	1	B1
64	Ilex aquifolium	Common holly	9m	500#mm	3.5 N 3.5 E 3.5 S 3.5 W		Mature	Fair overall Physiological and Structural condition.		40 Years	13/3/2024	1	C1
												Total :32	

Survey by Mark Welby DipArb(RFS), TechCert(ArboA), FArboA
Arboricultural Association Registered Consultant
www.mwelby.com

# denotes estimated dimension. Typically due to the tree being inaccessible.
Where dimensions are not listed please refer to the plan graphics for an indicative representation (typically for groups).

Trees & Groups for Removal

Removed Trees / Groups

Ref	Species	Common Name	Height	Stem Diameter	Canopy NESW	Crown Clearance	Age Class	Observations	Est. Remaining Contribution	Date Surveyed	No.	BS Cat
48	Mixed species	Mixed species	9m	350#mm			Mature	Mixed boundary screen. Comprising yew, rhododendron, hazel.	10 Years	22/9/2020	1	C2
60	Mixed species	Mixed species	5m	200#mm			Mature	Shrubby understorey comprising hazel, holly, laurel, rhododendron, hawthorn	10 Years	22/9/2020	1	C2
61	Prunus sp.	Prunus	3m	310mm	2 N 2 E 3 S 2 W	1m	Mature	Small with limited wider landscape value.	10 Years	22/9/2020	1	C1
											Total :3	

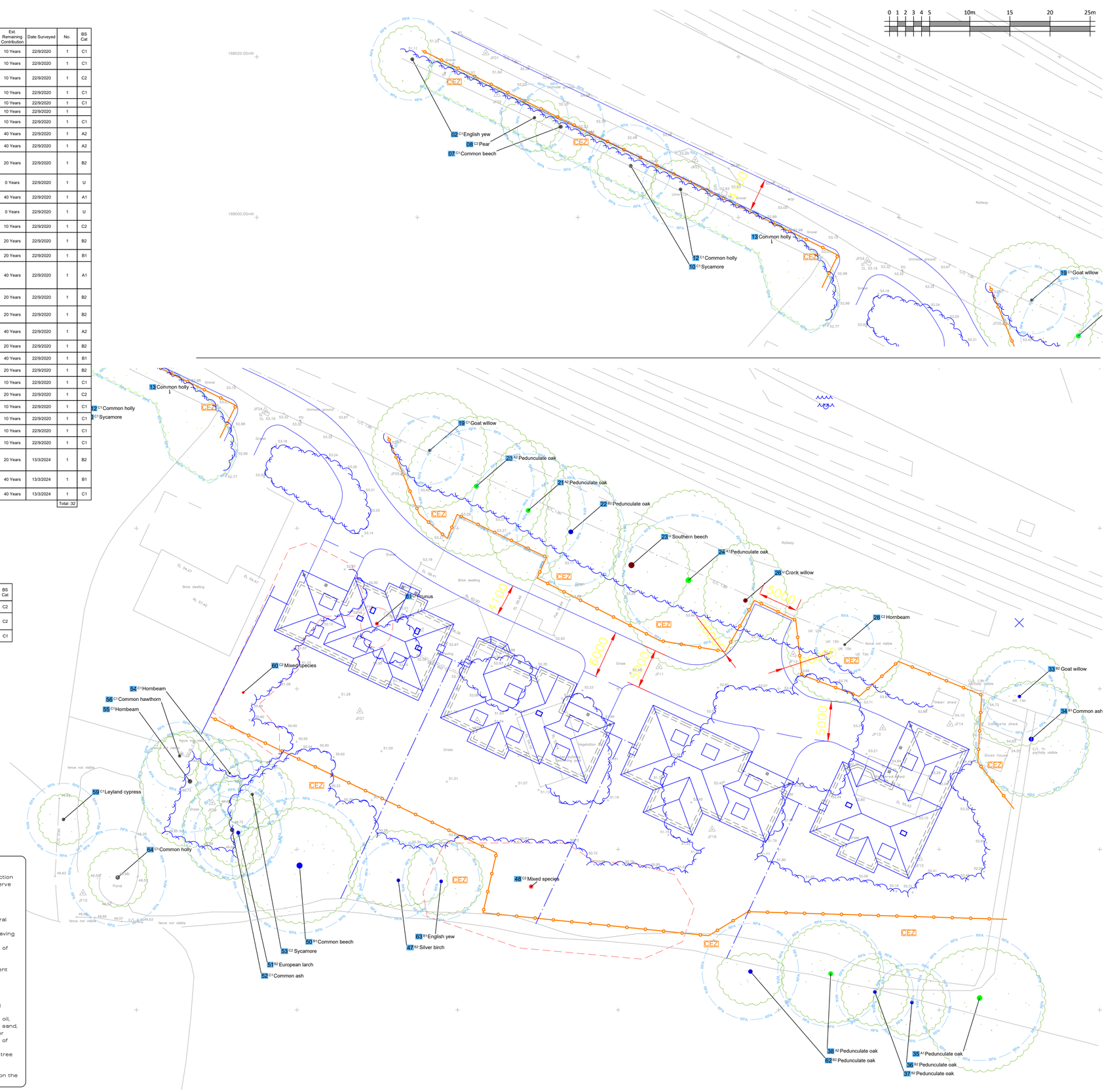

Key

Number/category/species
Crown spread
02 Fraxinus excelsior
TPO ref
Stem location & Category colour
Root protection area (RPA)

BS 5837:2012 Tree Quality Categories - Table 1

- Category A - High quality
- Category B - Moderate quality
- Category C - Low quality
- Category U - Unsuitable for retention

CEZ — Construction Exclusion Zone (CEZ)

CEZ extent. To be protected with temporary protective barriers or ground protection to allow construction access. See insets and method statement for details.

Tree to be removed

NOTES

This Tree Survey has been undertaken within the recommendations of British Standards 5837:2012 and current arboricultural best practice.

- The reference numbers of surveyed trees and groups of trees are shown. Stem locations within groups may be estimated, and indicative of canopy only
- The tree survey was carried out from ground level only, with the aid of binoculars as necessary, following the Visual Tree Assessment (VTA) method.
- Where trees are located on neighbouring land an estimated appraisal has been made of their quality and dimensions.
- Where stems or branches are obscured by ivy or other materials a full assessment of those parts will not be possible.
- Height dimensions are estimated and are given in metres.
- Trunk/stem diameters are measured in mm at 1.5 metres above ground level, unless otherwise stated. Where this is not possible, then Figure C.1 of the British Standard is followed.
- Tree canopies, where markedly asymmetrical, were measured (or estimated by pacing) in four directions using a laser measure. Symmetrical canopies are measured in one direction only, with dimensions in the remaining directions assumed to be similar. For the canopies of groups of trees, the maximum radius for each compass point is measured (more complicated groups will have further notes taken and an accurate representation will be shown on the plan).

Base plan/site survey reference:
GA -2560-A1- Site Plan.pdf

Statutory Tree Protection
Tree Protection Orders: none found with online LPA search

Conservation Area: N0

Felling licence: Garden areas are exempt.

This plan has been drafted in colour. A monochrome version must not be relied upon

Date	Notes	Rev

Default specification for protective barrier

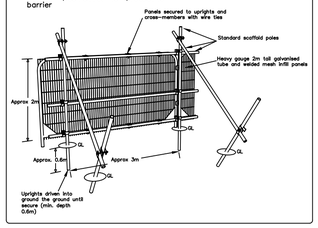

Ground Protection

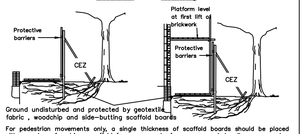

For pedestrian movements only, a single thickness of scaffold boards should be placed either on top of a driven scaffold frame, so as to form a suspended walkway, or on top of a compression-resistant layer (e.g. 100 mm depth of woodchip), laid onto a geotextile.

For pedestrian operated plant up to a gross weight of 2 t, proprietary, inter-linked ground protection boards should be placed on top of a compression-resistant layer (e.g. 150 mm depth of woodchip), laid onto a geotextile.

For wheeled or tracked construction traffic exceeding 2 t gross weight, an alternative system (e.g. pre-cast reinforced concrete slabs) should be employed to an engineering specification designed in conjunction with arboricultural advice to accommodate the likely loading to which it will be subjected.

Construction Exclusion Zone

It is the responsibility of everyone engaged in the construction process to respect the tree protection measures and observe the necessary precautions within and adjacent to them.

Inside the exclusion zone, the following shall apply:

- No mechanical excavation whatsoever;
- No excavation by any other means without arboricultural site supervision;
- No hand digging without a written method statement having first been approved by the project arboriculturist;
- No lowering of levels for any purpose (except removal of grass sward using hand tools);
- No storage of plant or materials;
- No storage or handling of any chemical including cement washings;
- No vehicular access;
- No fire lighting.

In addition to the above, further precautions are necessary adjacent to trees:

- No substances injurious to tree health, including fuels, oil, bitumen, cement (including cement washings), builder's sand, concrete mixing and other chemicals shall be stored or used within or directly adjacent to the protection area of retained trees;
- No fire shall be lit such that flames come within 5m of tree foliage.

All weather signs shall be erected at reasonable intervals on the barriers. See example inset

Tree Protection

58 Finchampstead Road,
Wokingham, RG40 2NS

Date:	Scale:
19/03/2024	1:250 @A1

DWG Ref: MW.20.0919.TPP

MARK WELBY
CONSULTING ARBORISTS
Mark Welby
DipArb(RFS), TechCert(ArboA), FArboA
Arboricultural Association Registered Consultant
01730 239 492 | mark@mwelby.com
www.mwelby.com
M Welby Ltd. | Hampshire | UK