08.FEB.2000* 0510

FRONT ELEVATION

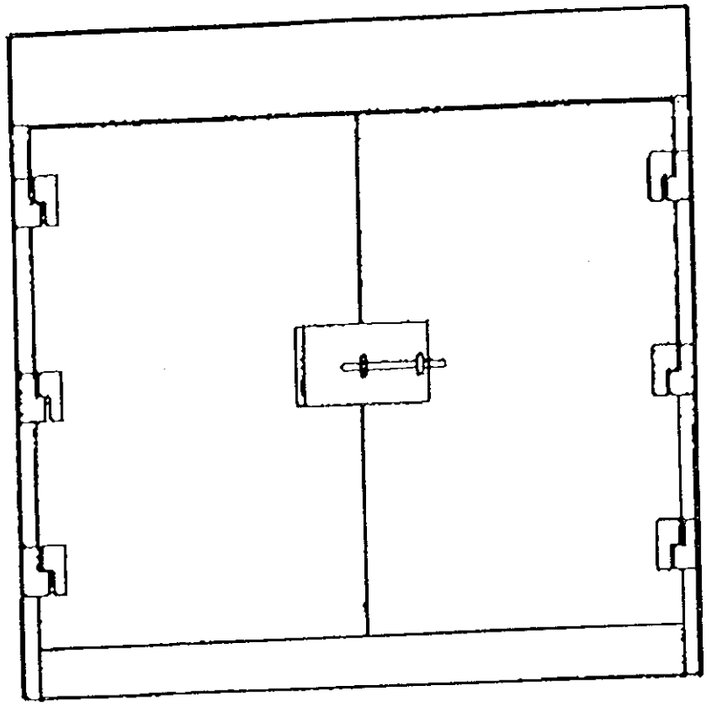

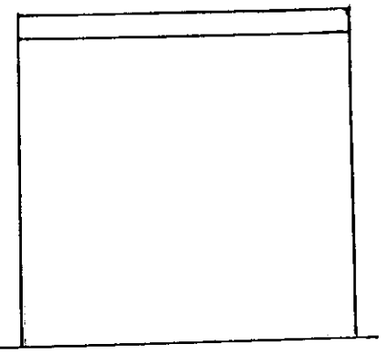

REAR ELEVATION
1:20

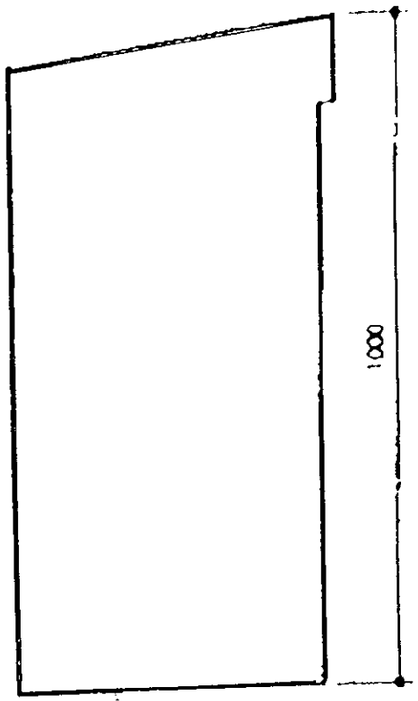

SIDE ELEVATIONS

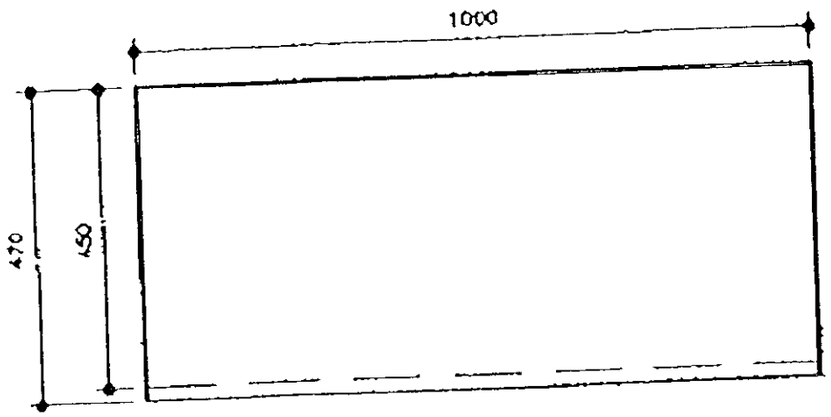

PLAN

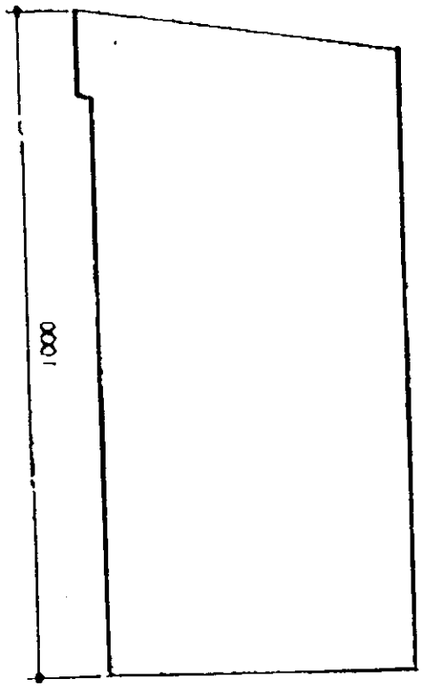

GENERAL NOTES

This drawing is the Copyright of Colnet and must not be reproduced, loaned or copied without written consent.
Use written dimensions only. Do not scale
Use the current version of all referenced information
Refer to Standard Drawing Notes

PALISADE FENCED SITES
Where compound fenced with palisade meter cabinet to be sited within compound. Omit timber post and flank in concrete base.

FOR CABINET FOUNDATIONS + DUCTING SEE P/FOU/101
FOR BACKBOARD DETAILS
3 PHASE 63 AMP SEE P/ELE/006
SINGLE PHASE 100 AMP SEE P/ELE/005
SINGLE PHASE 32 AMP SEE P/ELE/007

Meter Cabin Colour-Light Grey
Padlock Kabo 2001 (small)

CABINET COLOUR-
BS381C-627 LIGHT AIRCRAFT GREY

APPROVED

C	11.08.97	Colour spec added (Fig. 1A Drawing)	DMC	11.08.97
B	23.10.96	Cable access(3) box removed	DMC	23.10.96
A	23.7.96	Connection Removed	DMC	23.7.96
Issue	Date	Description	Drwn	Chkd

Colnet
NETWORK CONSTRUCTION

STANDARD DETAILS

Drawing Title
Meicas Electrical Meter Cabinet

Scale: 1:10	Drawn: SMG
Date: 14.01.97	Approved: M.E

Drawing Number
P/EQU/600/C

Drg no. MPC/IDS/14002308

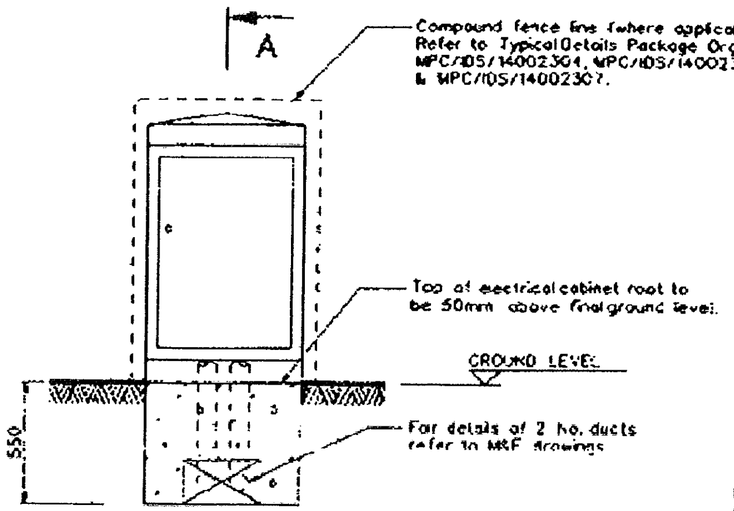

FRONT ELEVATION

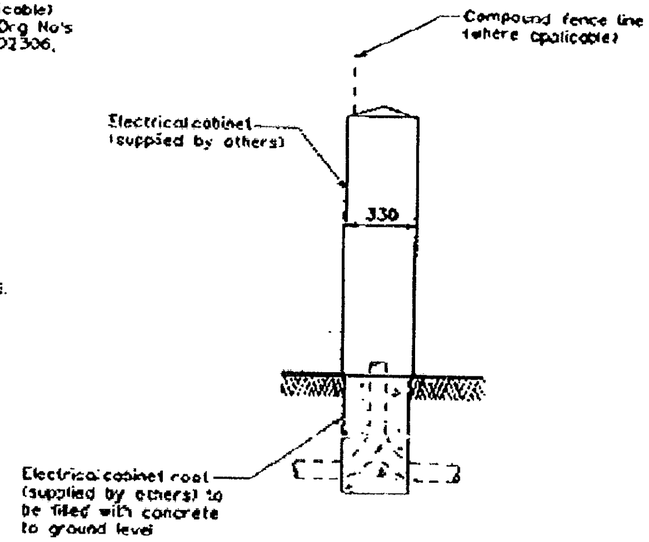

SIDE ELEVATION

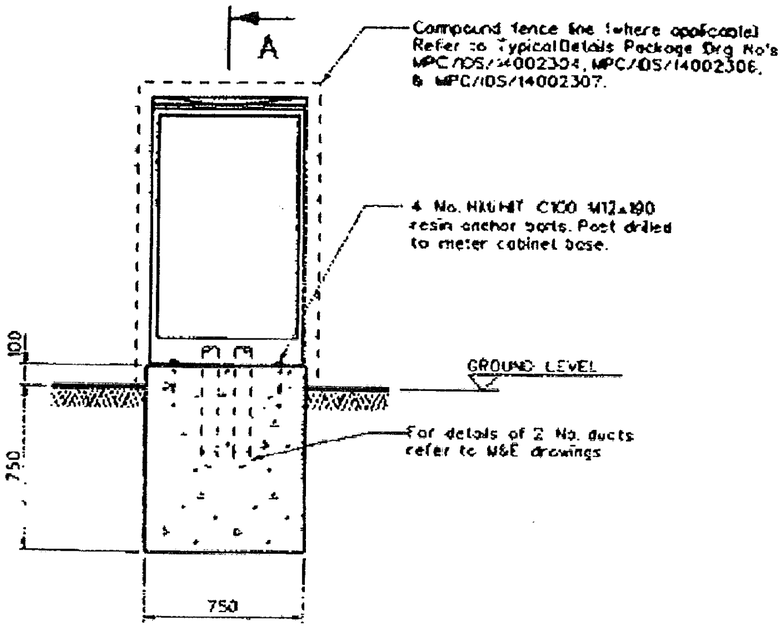

REAR ELEVATION

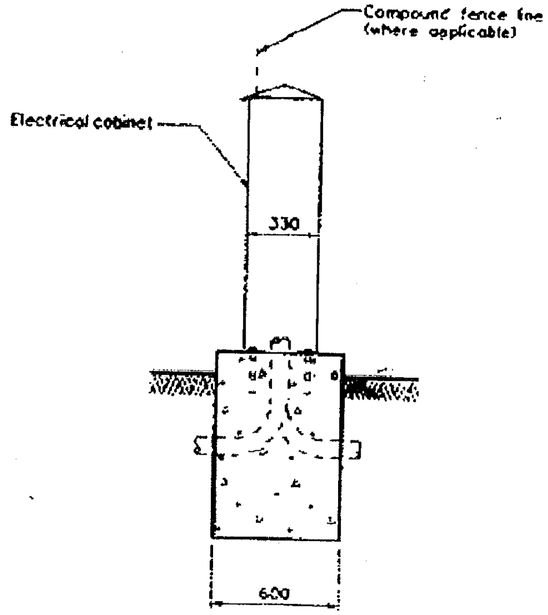

SIDE ELEVATION

NOTES

DO NOT SCALE

For main notes, refer to specific project drawings.

1. All dimensions are in mm unless otherwise specified.
2. Structural concrete to be grade FND3
3. Nominal cover to reinforcement to be 10mm
4. Resin anchors to be galvanised.
5. Worked finish to be steel float finish.
6. This drawing shows a Climet meter cabinet root for Portasilo meter cabinet with root. See installation instructions supplied with cabinet.

ORIGINAL DRAWING A2 SIZE

D	Date 26-5-99	Details amended.
Mn 22870	Approv. [signature]	
C	Date 28/5/96	Details amended.
Mn 19099	Approv. LPG	
B	Date 22/08/96	Fence line added for compound sites. Building line deleted. Drg No. MPC/IDS/14002301 incorporated.
Mn 12117	Approv. AH	
A	Date 16/02/96	First issue.
Mn 11897	Approv. GG	

Mercury Personal Communications

A Cable & Wireless/US WEST partnership

Mercury Personal Communications is a partnership between Mercury Personal Communications Limited, USM PCN Inc and MPC 10 Limited

Imperial Place, Harwell Road, Borehamwood, Herts. WD6 1EA

Telephone 0181-214 2121 Facsimile 0181-905 1601

08.FEB.2000* 0510

APPROVED

Site name & Address:

TECHNICAL SERVICES

23 JUN 1999

Title:

ELECTRICAL METER CABINETS : FOOTING CONSTRUCTION DETAILS

Purpose of issue:

Drawing no:

MPC/IDS/14002308

Ceiling

Site no:

Issue	Scale:	Chkd:	Date:
D	1:20	[signature]	27/5/99
	Drn: GJM	Date: 06/02/96	Approv. [signature] Date: 26.5.99

Mercury Personal Communications 1999 This drawing and any information or descriptive matter set out herein are the confidential and copyright property of Mercury Personal Communications and must be held in the strictest confidence by the recipient. Strictest confidence by the recipient and must not be loaned or disclosed to any third party or copied or used for manufacturing tendering or any other purpose without Mercury Personal Communications prior written consent.

When quoting the drawing number please state the latest letter of issue.

Site 421594 mm x 430 mm

One2One Plot Ref: 4651

91520 Coverage from planned and existing sites including ORANGE HEADLEY PARK ESTATE

Produced on 13 January 2000

PLOT 2

08.FEB.2000* 0510

REMOVED

Reproduced from the 1997 Ordanance Survey 1:50 000 Scale Landranger map with the permission of The Controller of Her Majesty's Stationary Office, Crown copyright Mercury Personal Communications, Borehamwood, Herts, Licence No. AL 51286A0001

One2One Plot Ref: 4652

91520 Coverage from ORANGE
HEADLEY PARK ESTATE

Produced on 13 January 2000

PLOT 3 (ALONE)

APPROVED

Reproduced from the 1997 Ordanance Survey 1:50 000 Scale Landranger map with the permission of The Controller of Her Majesty's Stationary Office, Crown copyright Mercury Personal Communications, Borehamwood, Herts, Licence No. AL 51286A0001

One2One Plot Ref: 4650

91520 Coverage Hole

Produced on 13 January 2000

PLOT 1

08.FEB.2000* 0510

REMOVED

Reproduced from the 1997 Ordanance Survey 1:50 000 Scale Landranger map with the permission of The Controller of Her Majesty's Stationary Office, Crown copyright Mercury Personal Communications, Borehamwood, Herts. Licence No. AL 51286A0001

08 FEB 2000* 0510

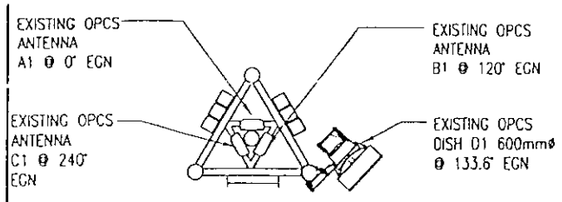

OPCS HEAD FRAME PLAN
SCALE 1:50

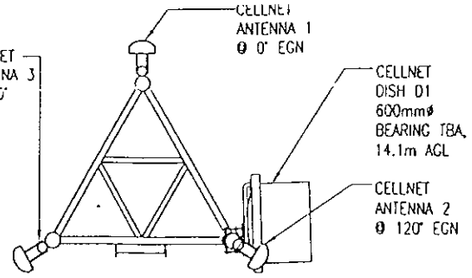

PLAN ON CELLNET ANTENNAS @ 16.8m
SCALE 1:50

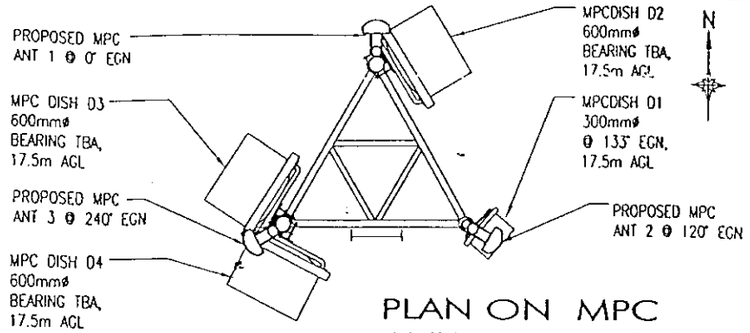

PLAN ON MPC ANTENNAS @ 20m
SCALE 1:50



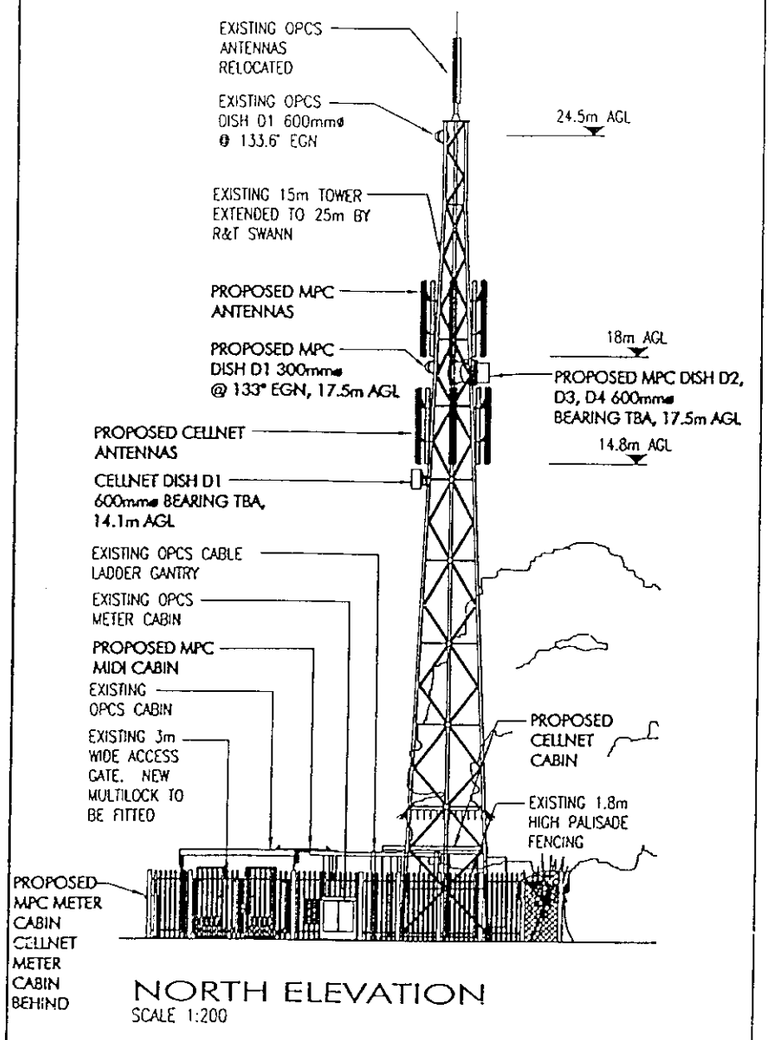

NORTH ELEVATION
SCALE 1:200

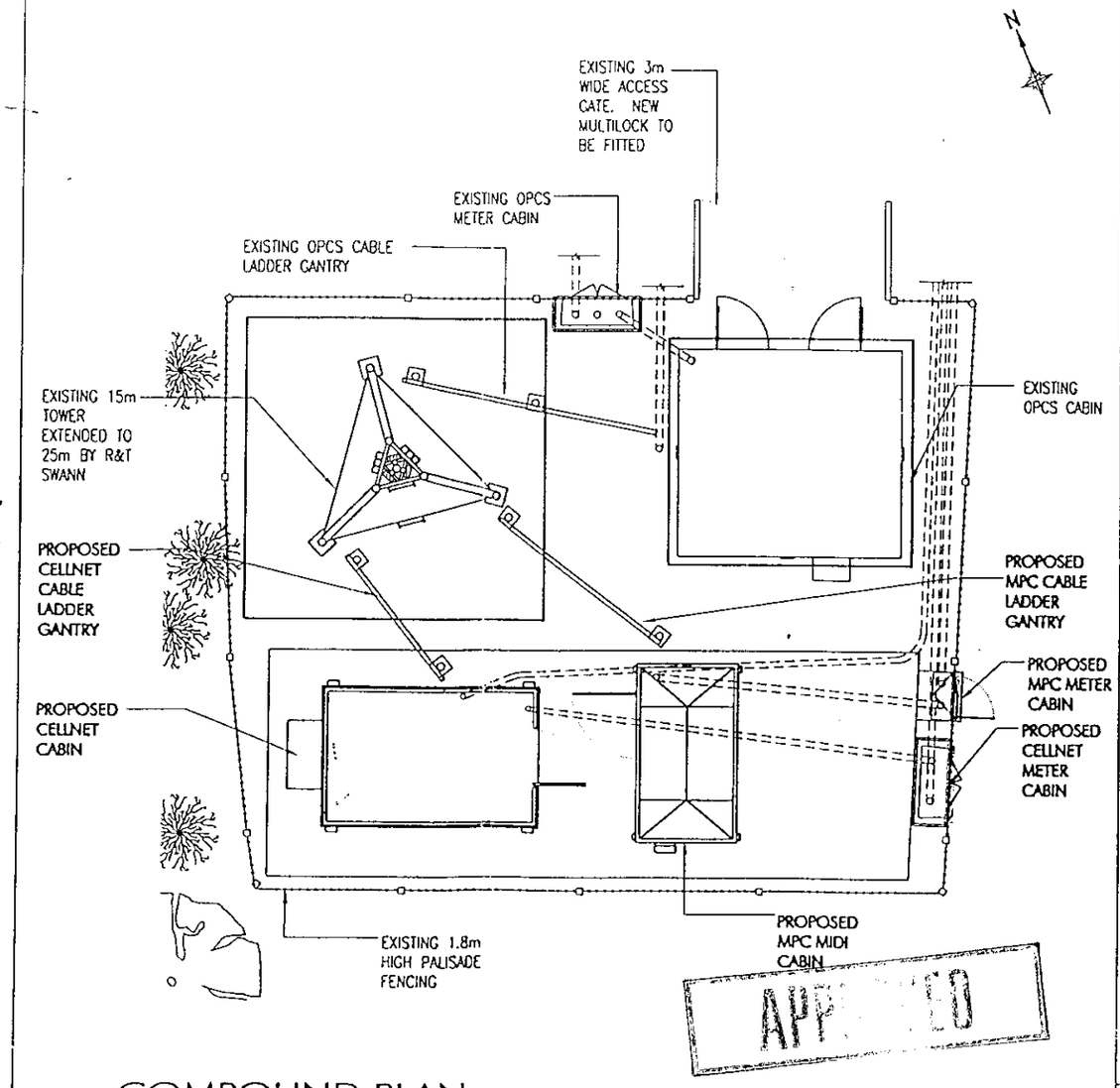

COMPOUND PLAN
SCALE 1:100

MPC EQUIPMENT SCHEDULE

PROPOSED CABIN DETAILS	
CABIN TYPE	CABIN DIMENSION (WIDTH x DEPTH x HEIGHT)
MPC MIDI CABIN	1560mmx2760mmx2900mm

PROPOSED ANTENNA DETAILS		
ANT 1	0° EGN	19.0m AGL
ANT 2	120° EGN	19.0m AGL
ANT 3	240° EGN	19.0m AGL

PROPOSED DISH DETAILS			
DISH No.	DISH SIZE	DISH HEIGHT (m AGL)	BEARING
D1	300mm	15.0m	133° EGN
D2	600mm	TBA	TBA
D3	600mm	TBA	TBA
D4	600mm	TBA	TBA

CELLNET EQUIPMENT SCHEDULE

CABIN DETAILS	
CABIN TYPE	CABIN DIMENSION (WIDTH x DEPTH x HEIGHT)
CABIN	3250x2100x2900mm

ANTENNA DETAILS		3x DUAL POLAR ANTENNAS
CELL No.	BEARING	HEIGHT
CELL 1	0.0° EGN	14.0m AGL
CELL 2	120° EGN	14.0m AGL
CELL 3	240° EGN	14.0m AGL

PROPOSED DISH DETAILS			
DISH No.	DISH SIZE	DISH HEIGHT (m AGL)	BEARING
D1	600mm	12.0m	TBA

OPCS EQUIPMENT SCHEDULE

EXISTING CABIN DETAILS	
CABIN TYPE	CABIN DIMENSION (WIDTH x DEPTH x HEIGHT)
1No. Tx	770x645x2075mm

FEEDER DETAILS		
MAX. FEEDER LENGTH	FEEDER TYPE & SIZE	MIN RADIUS
35000	LDF5/50	250mm

NOTE: INFORMATION HELD ON MS TAKES PRECEDENCE OVER ALL KEYS AND SCHEDULES SHOWN.

ANTENNA KEY						
ITEM	FUNCTION (RX/TX)	SECTOR	TYPE/SIZE	BEARING	HEIGHT TO C/L OF ANTENNA FROM FFL	HEIGHT TO CENTRE OF DISH FROM FFL
A1	TX/RX	A		0° EGN	26000mm	
B1	TX/RX	B		120° EGN	26000mm	
C1	TX/RX	C		240° EGN	26000mm	
D1			300mm	133.6° EGN		24500mm

PC/BRK0088/SHA/99051834 — CELLNET REF 6777
PC/BRK0088/SHA/99052911 — MPC REF 91520

SITE NUMBER BRK 0088

ample design limited
Harrier House St Albans Road East
Hatfield Herts AL10 0HE
tel +44(0)1707 266144 fax +44(0)1707 266677
e-mail:- adl@ample.co.uk

A3 ORIGINAL
INCHES
0 1 2
0 10 20 30 40 50
MILLIMETERS

ISS.	DESCRIPTION	APP	IN.	DATE.
B	TOWER HEIGHT REVISED		LC	12.10.99
A	DETAIL DESIGN		LC	11.10.99
-	CELLNET AND MPC SITE SHARE			

SCALE	DRAWN	CHKED	APP
RTD	LC		
	DATE 05.10.99	DATE 12/10/99	DATE 12/10/99

TITLE GENERAL ARRANGEMENT
WOODLEY GREEN
HEADLEY PARK INDUSTRIAL ESTATE
WOODLEY, READING

DRAWING NUMBER 30/BRK0088/SHA/02
AMPLE NUMBER 99/OPCS/BRK0088/02
ISSUE B

orange
Hutchison Telecom
St James Court
Great Park Road
Almondsbury Park
Bradley Stoke
Bristol
BS12 4QJ

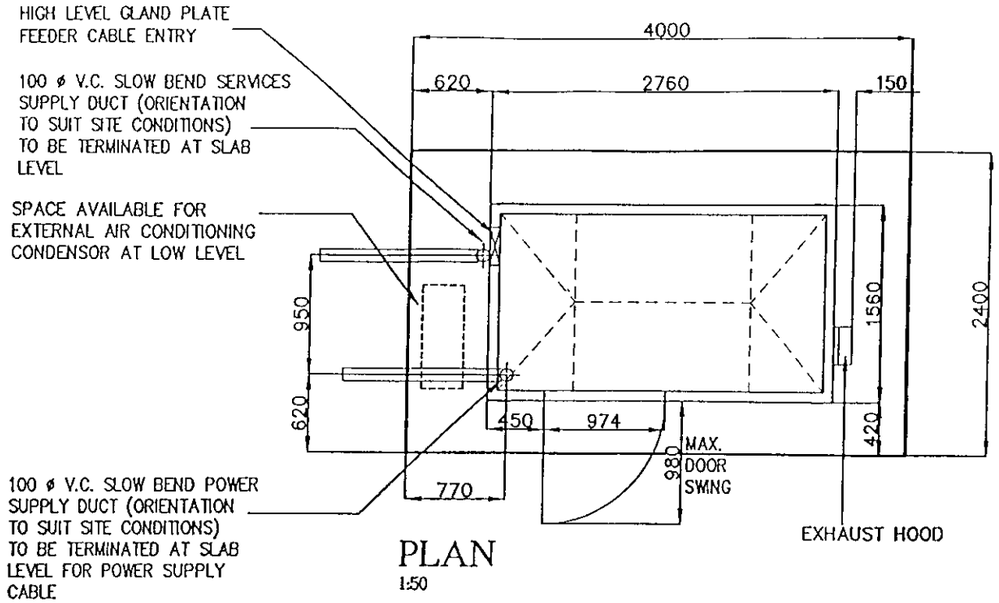

PLAN
1:50

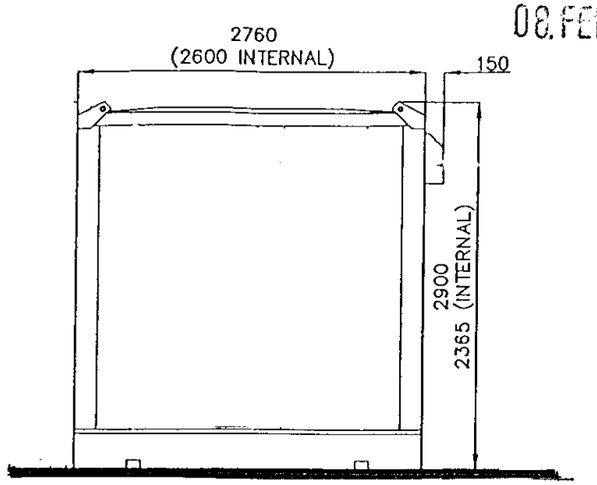

REAR ELEVATION
1:50

08.FEB.2000* 0510

CABIN DETAILS

WEIGHT UNLOADED – 1000kg
WEIGHT FULLY LOADED – 2600kg*

* THIS WEIGHT MAY INCREASE DUE TO FUTURE EQUIPMENT CHANGES – CONFIRM WITH MPC PRIOR TO CONSTRUCTION

NOTE; GROUND BEARING PRESSURE OF 20kN/m² ASSUMED – IF GBP IS CONSIDERED NOT TO BE 20kN/m² INFORM DESIGN OFFICE PRIOR TO CONSTRUCTION

CONCRETE SLAB

1–CONCRETE GRADE C35
2–BLINDING CONCRETE GRADE GEN2
3–COVER TO REINFORCEMENT–50mm
4–WORKED FINISH=STEEL FLOAT FINISH
5–AREA ON WHICH UNIT SITS TO BE LEVEL TO A TOLERANCE OF ± 2mm BETWEEN BOLT POSITIONS.

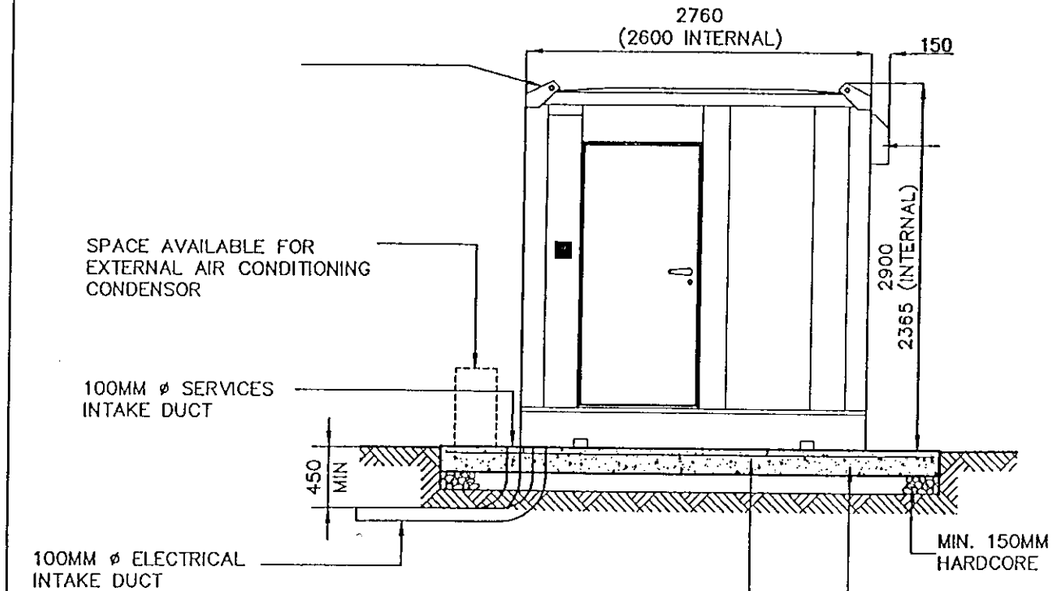

FRONT ELEVATION
1:50

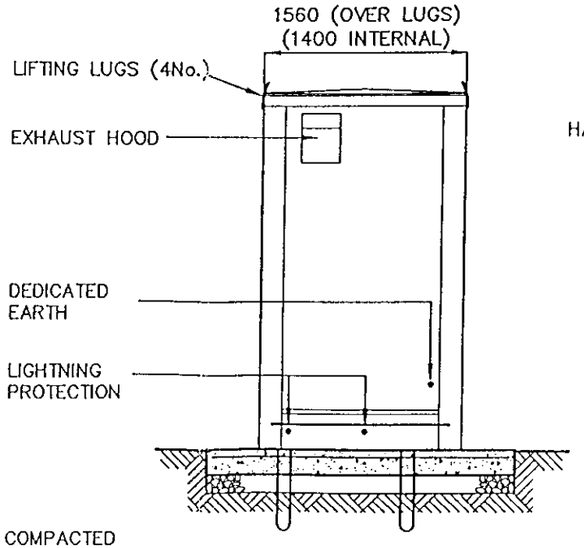

RIGHT ELEVATION
1:50

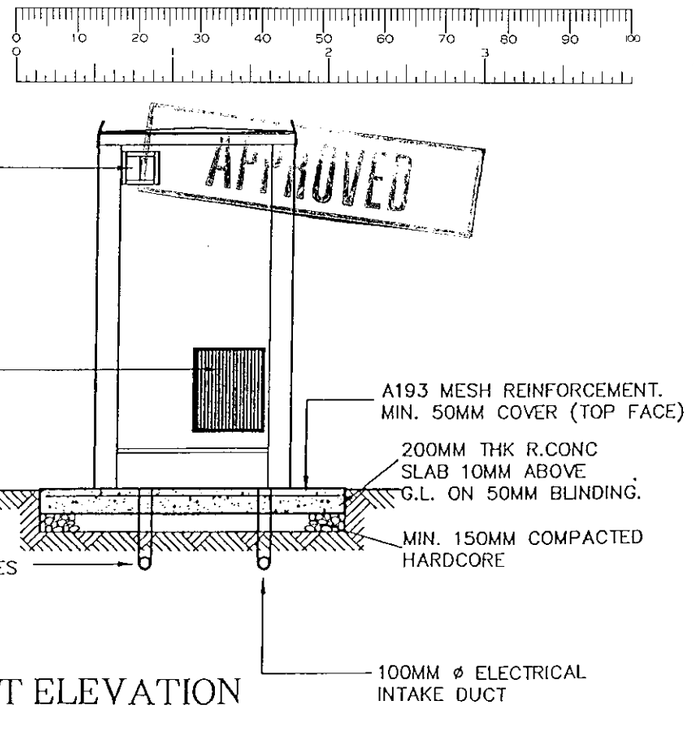

LEFT ELEVATION
1:50

REV.	DATE	REMARKS	BY	CHK.

CLIENT

DRAWING TITLE

DETAILS OF MERCURY 1-2-1 PORTASILO MIDI EQUIPMENT CABIN

DESIGN OFFICE
395 GEORGE ROAD, ERDINGTON
BIRMINGHAM B23 7RZ
TEL. 0121 344–4888
FAX. 0121 344–4801

Tilbury Douglas

DRAWN	CHECKED	DATE	SCALE
ZI	PSL	25/3/99	1:50

COMPUTER AIDED DRAWING - AVOID MANUAL MODIFICATION

FILENAME Standard_A3_407dwg

DRAWING No. STD/A3/407

REVISION

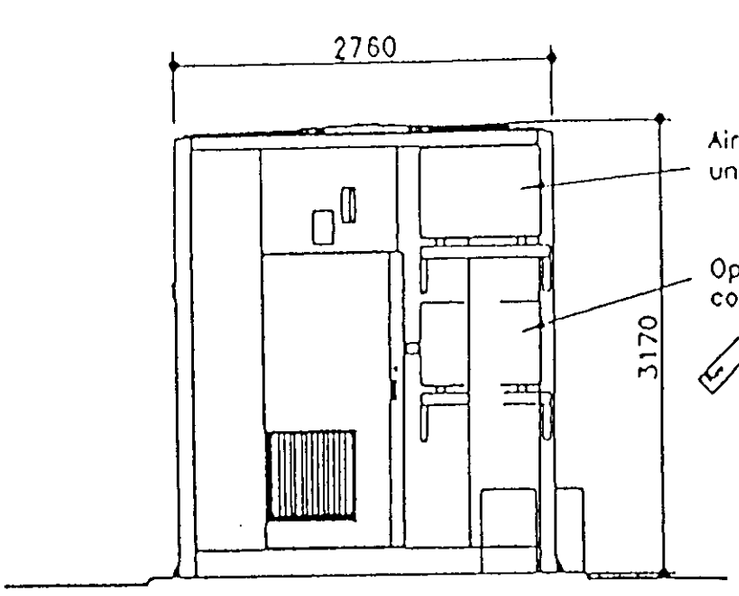

Entrance Elevation

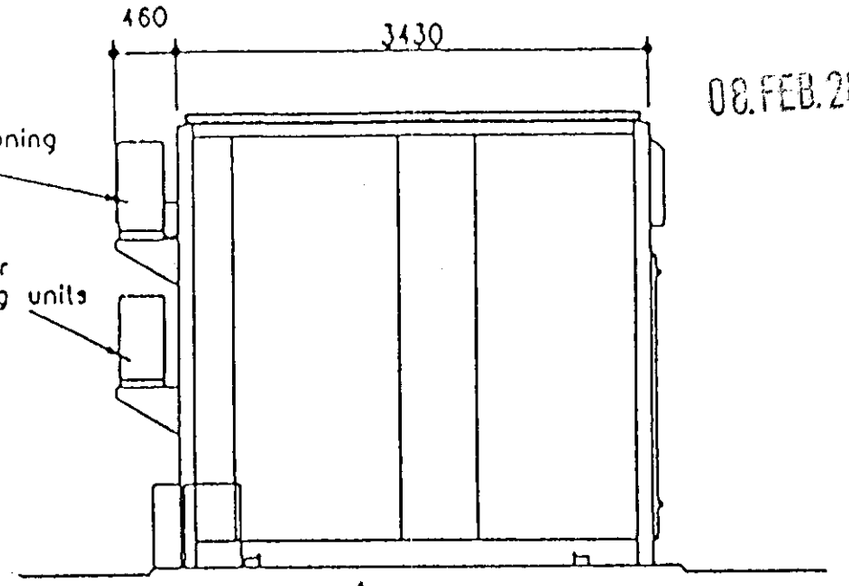

Side Elevations

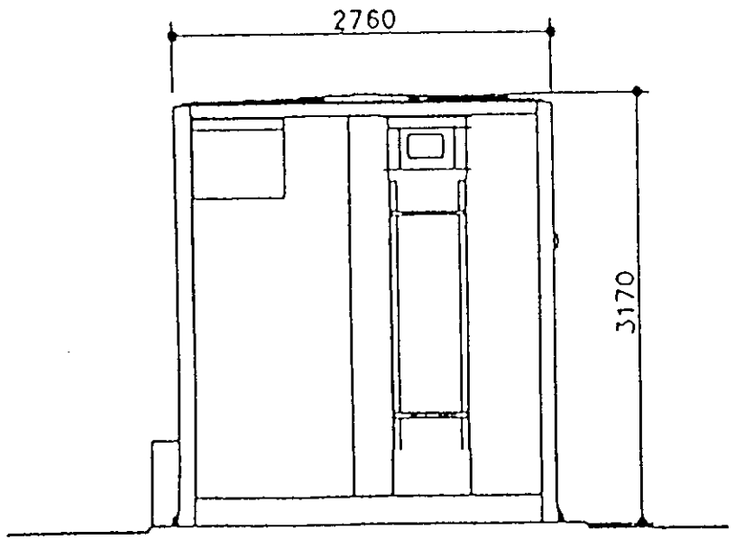

Rear Elevation

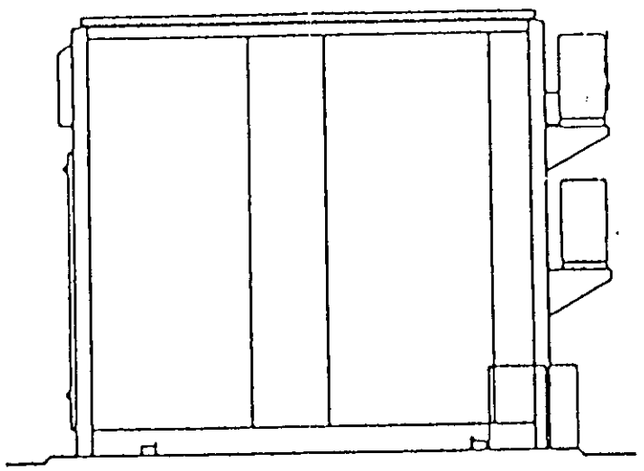

08.FEB.2000* 0510

APPROVED

GENERAL NOTES

This drawing is the Copyright of Cellnet and must not be reissued, loaned or copied without written consent.
Use written dimensions only. Do not scale
Use the current revision of all referenced information.
Refer to Standard Drawing Notes.

CABIN SETTING OUT
For cabin setting out refer to drawing no. EQU/400.

CABIN SUPPORT
For cabin foundation refer to drawing no FOU/800.
For cabin support grillage refer to drawing no. STR/402.

CABIN FINISH
The cabin finish to be dependant on site specific location.

CABIN MOUNTED ANTENNA POLES
Where antenna poles are mounted on the corners of cabin refer to drawing no. STR/809 for bracket details. Base of poles to be supported on cabin support grillage. Refer to cabin manufacturers details for fixing insert details.

Rev	Date	Description	Drw	Ckd
[illegible]	1-8-96	[illegible]	[illegible]	[illegible]
[illegible]	11.3.96	Second [illegible] not [illegible] added.	[illegible]	

cellnet
NETWORK CONSTRUCTION

STANDARD DETAILS

Drawing Title:
30m sq Cabin Elevations

Scale: 1:50	Drawn: js
Date: 1-8-96	Checked: –

Drawing Number:
P/EQU/200/oB

SITE NUMBER BRK 0088

08.FEB.2000* 0510

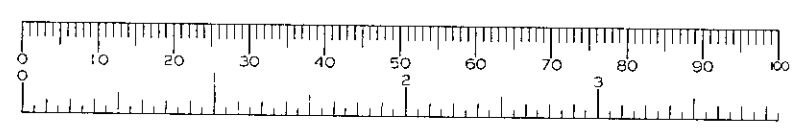

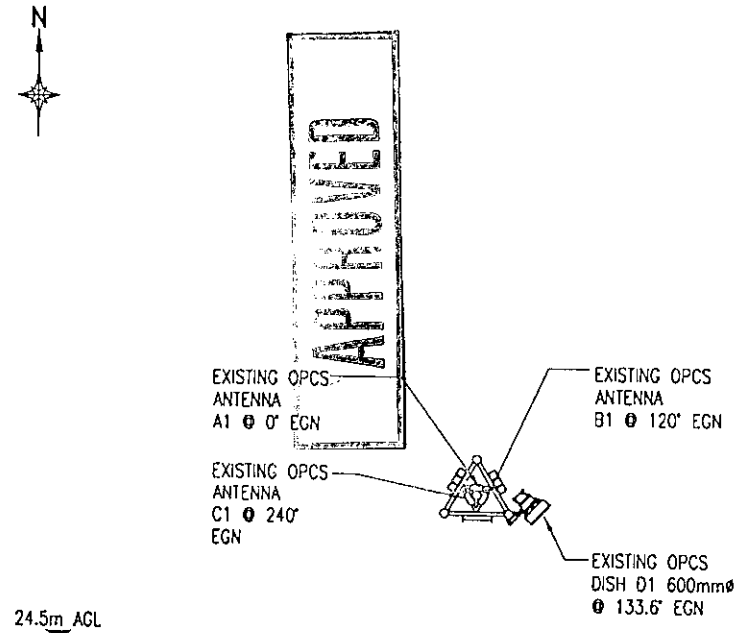

OPCS HEAD FRAME PLAN
SCALE 1:100

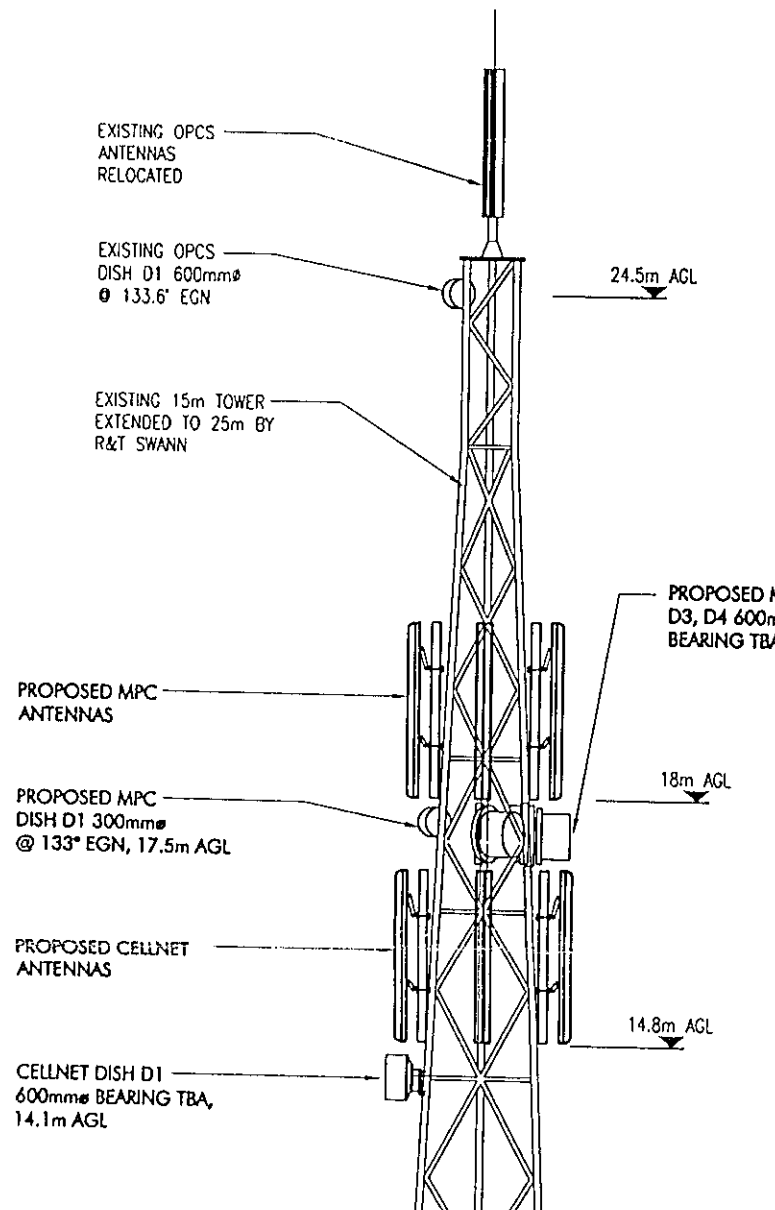

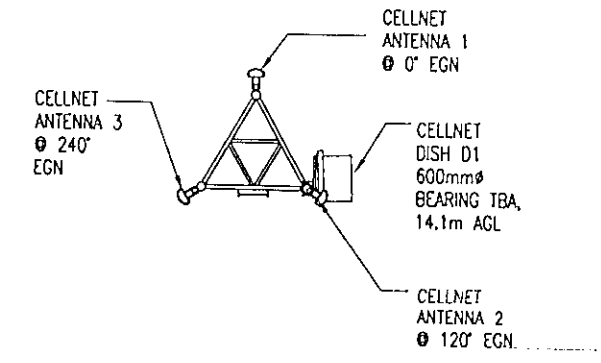

PLAN ON CELLNET ANTENNAS @ 16.8m
SCALE 1:100

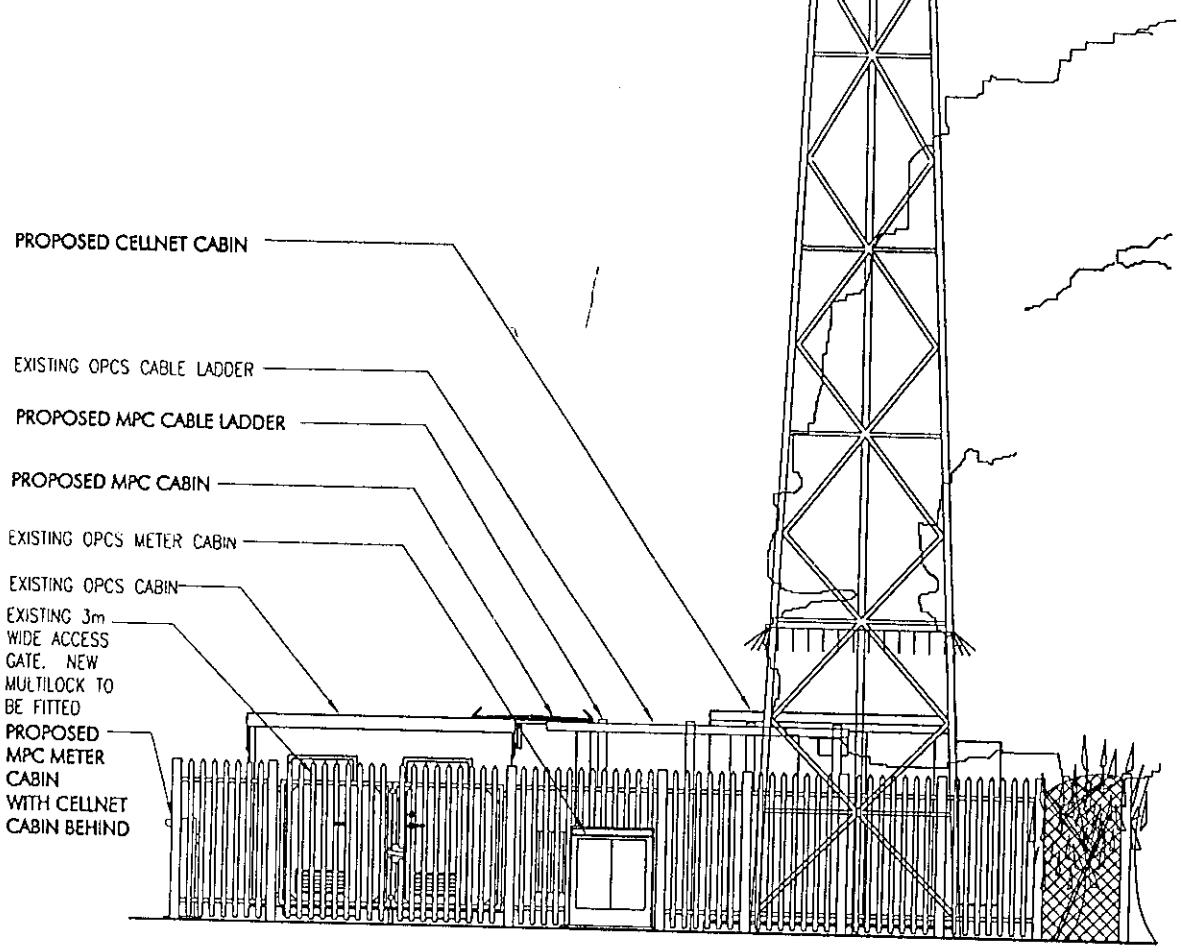

NORTH ELEVATION
SCALE 1:100

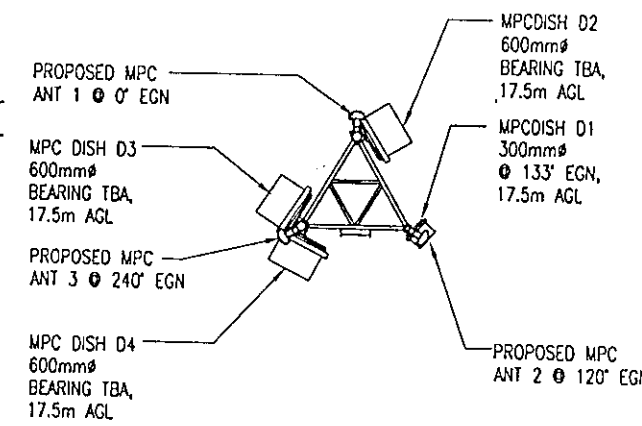

PLAN ON MPC ANTENNAS @ 20m
SCALE 1:100

PC/BRK0088/SHA/99051834

PC/BRK0088/SHA/99052911

CELLNET REF 6777

MPC REF 91520

St James Court
Great Park Road
Almondsbury Park
Bradley Stoke
Bristol
BS12 4QJ

orange

hutchison telecom

TITLE COMPOUND PLAN
WOODLEY GREEN
HEADLEY PARK INDUSTRIAL ESTATE
WOODLEY, READING

DRAWING NUMBER 30/BRK0088/SHA/03
AMPLE NUMBER 99/OPCS/BRK0088/03
ISSUE A

A	TOWER HEIGHT REVISED	LC	12.10.99	
-	CELLNET AND MPC SITE SHARE	APP'D IN.	DATE.	
ISS.	DESCRIPTION	CHKED	APP	
SCALE	DRAWN LC	DATE 05.10.99	DATE 12/10/99	

RTD

A3 ORIGINAL
INCHES
MILLIMETERS

ample

ample design limited
Harrier House St Albans Road East
Hatfield Herts AL10 0HE
tel +44(0)1707 266144 fax +44(0)1707 266677
e-mail:- adl@ample.co.uk

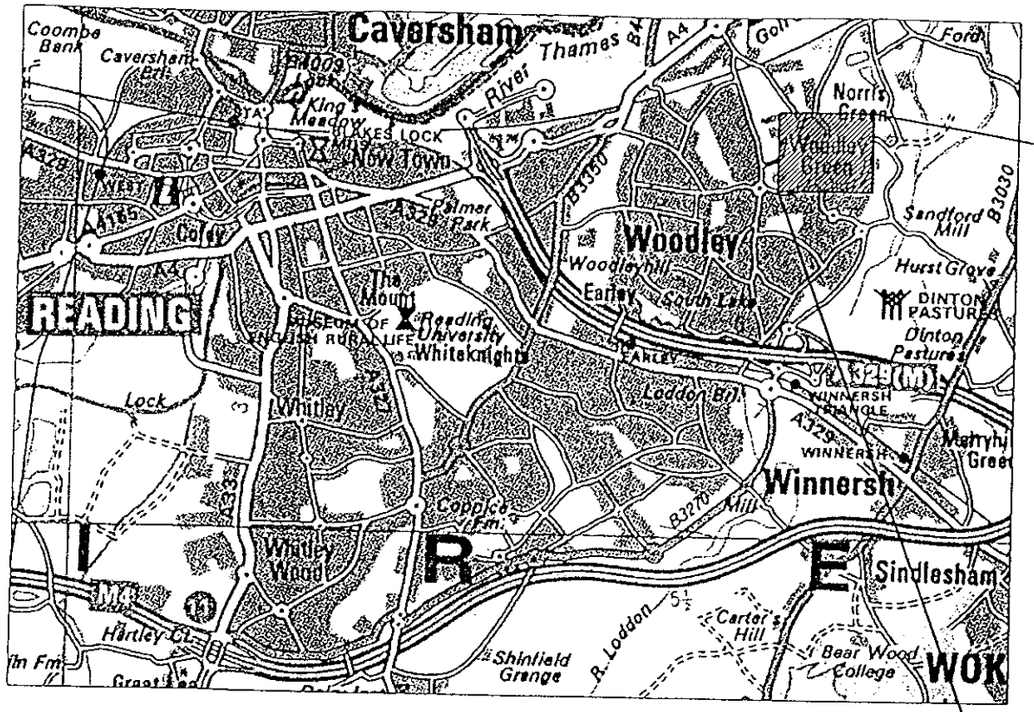

SITE LOCATION
NOT TO SCALE

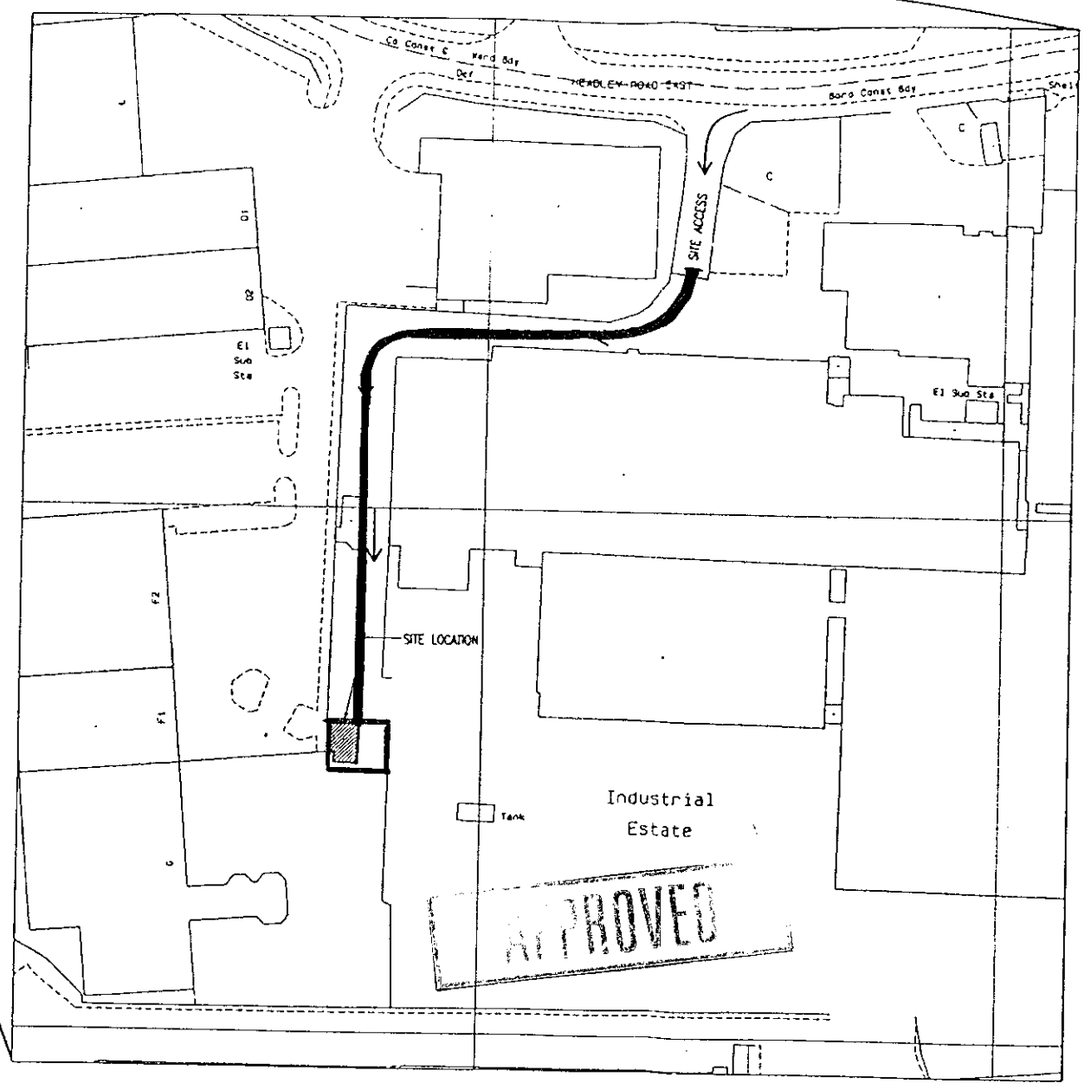

ORDNANCE SURVEY
SCALE 1:1250

08.FEB.2000* 0510

APPROVED

SITE NUMBER BRK 0088

National Grid Reference E 476770 N 173150

PC/BRK0088/SHA/99051834 | CELLNET REF 6777
PC/BRK0088/SHA/99052911 | MPC REF 91520

ample design limited
Harrier House St Albans Road East
Hatfield Herts AL10 0HE
tel +44(0)1707 266144 fax +44(0)1707 266677
e-mail:- adl@ample.co.uk

A3 ORIGINAL
INCHES
MILLIMETERS

ISS.	DESCRIPTION		APP	IN.	DATE.
A	DETAIL DESIGN			LC	11.10.99
-	CELLNET AND MPC SITE SHARE				

SCALE RTD | DRAWN LC | CHKED | APP | DATE 05.10.99 | DATE 11/10/99 | DATE 11/10/99

TITLE SITE LOCATION
WOODLEY GREEN
HEADLEY PARK INDUSTRIAL ESTATE
WOODLEY, READING

DRAWING NUMBER 30/BRK0088/SHA/01
AMPLE NUMBER 99/OPCS/BRK0088/01
ISSUE A

orange
hutchison telecom

St James Court
Great Park Road
Almondsbury Park
Bradley Stoke
Bristol
BS12 4QJ