Drg no: MPC/IDS/14002271

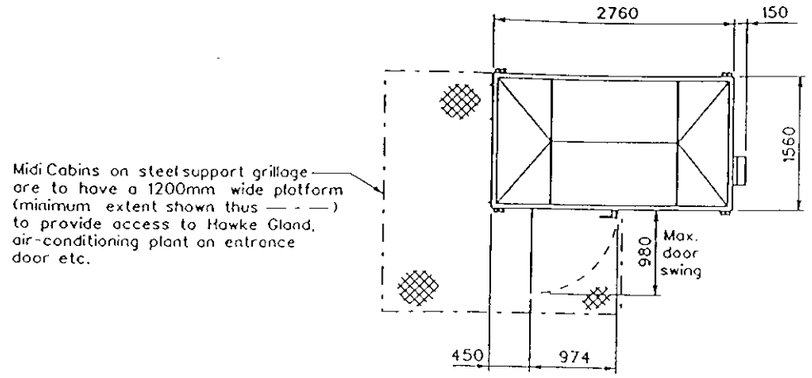

PLAN VIEW

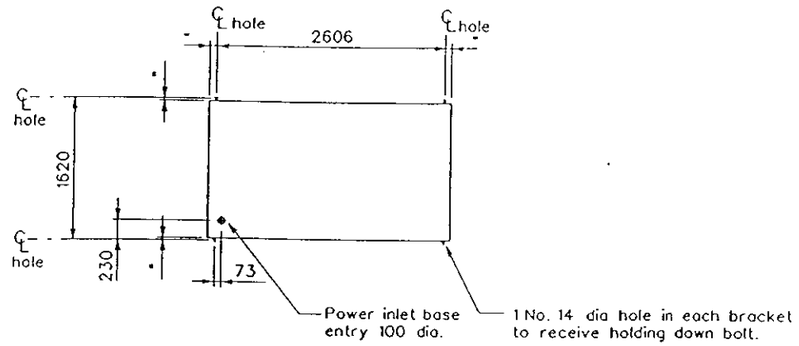

FOOTPRINT

NOTES

PURPOSE OF DRAWING :
To show the cabin layout to assist in the production of site specific planning & acquisition drawings.

1. All dimensions are in mm

CABIN DETAILS :
Weight unloaded : 1000Kg ①
Weight fully loaded : 2600Kg ②

① This weight may increase due to future changes in equipment levels, therefore confirm overall weight with MPC material handling each time.

② All sites to be designed to accomodate a fully loaded cabin.

Use shims at holding-down positions if required to ensure level bearing for cabin

APPROVED

14 APR 2000 * 1226

ORIGINAL DRAWING A2 SIZE

200 0.0 200 400 600
SCALE (mm)

D	Date 9/6/99	Holding down bolt diameter revised	
Mn 22938	Approv. SL		
C	Date 16/10/98	Minimum platform requirement added.	
Mn 20589	Approv. SL		
B	Date 28/09/98	Duct location amended.	
Mn 20414	Approv. SL		
A	Date 07/09/98	First issue	
Mn 20162	Approv. SL		

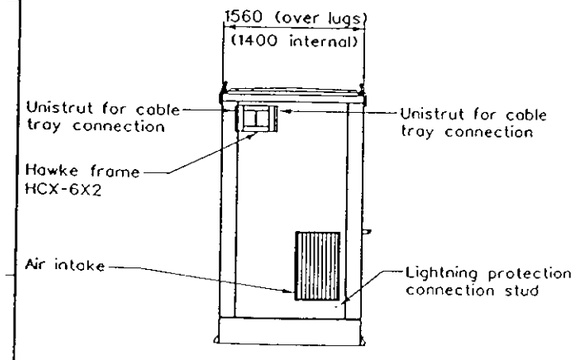

LEFT END VIEW

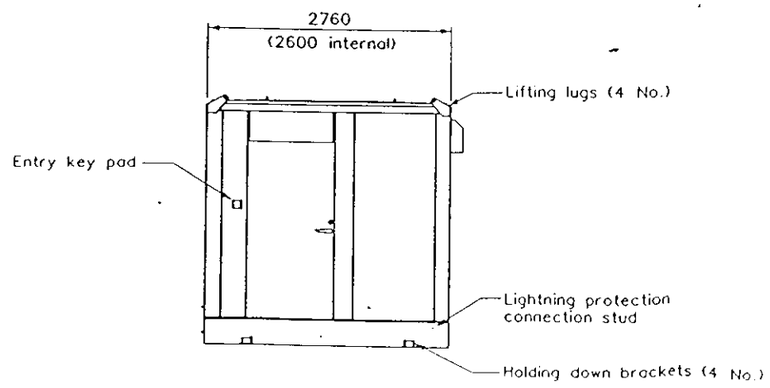

FRONT VIEW

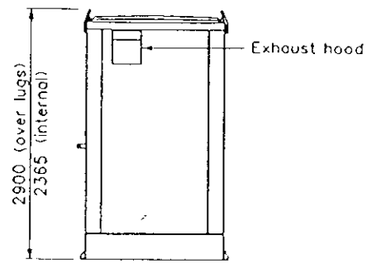

RIGHT END VIEW

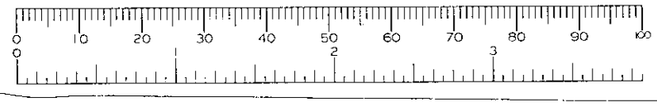

Mercury Personal Communications

A Cable & Wireless / US WEST joint venture.

Mercury Personal Communications is a partnership between Mercury Personal Communications Limited, USW PCN Inc. and MPC 92 Limited.

Imperial Place, Maxwell Road, Borehamwood, Herts. WD6 1EA.
Telephone : 0181-214 2121 Facsimile : 0181-905 1601

Site name & Address:

TECHNICAL SERVICES

Title:

PORTASILO MIDI CABIN

Purpose of issue:

TYPICAL DETAILS

Drawing no:

MPC/IDS/14002271

Cell no		Site no	
Issue D	Scale: 1:50	Ch'd	Date: 16/6/99
	Drn: TM Date: 18/8/98	Approv SL	Date: 9/6/99

©Mercury Personal Communications 1999 This drawing and any information or descriptive matter set out hereon are the confidential and copyright property of Mercury Personal Communications and must be held in the strictest confidence by the recipient strictest confidence by the recipient and must not be loaned or disclosed to any third party or copied or used for manufacturing tendering or any other purpose without Mercury Personal Communications prior written consent

When quoting this drawing number please state the latest letter of issue

Size A2(594mm x 420mm)

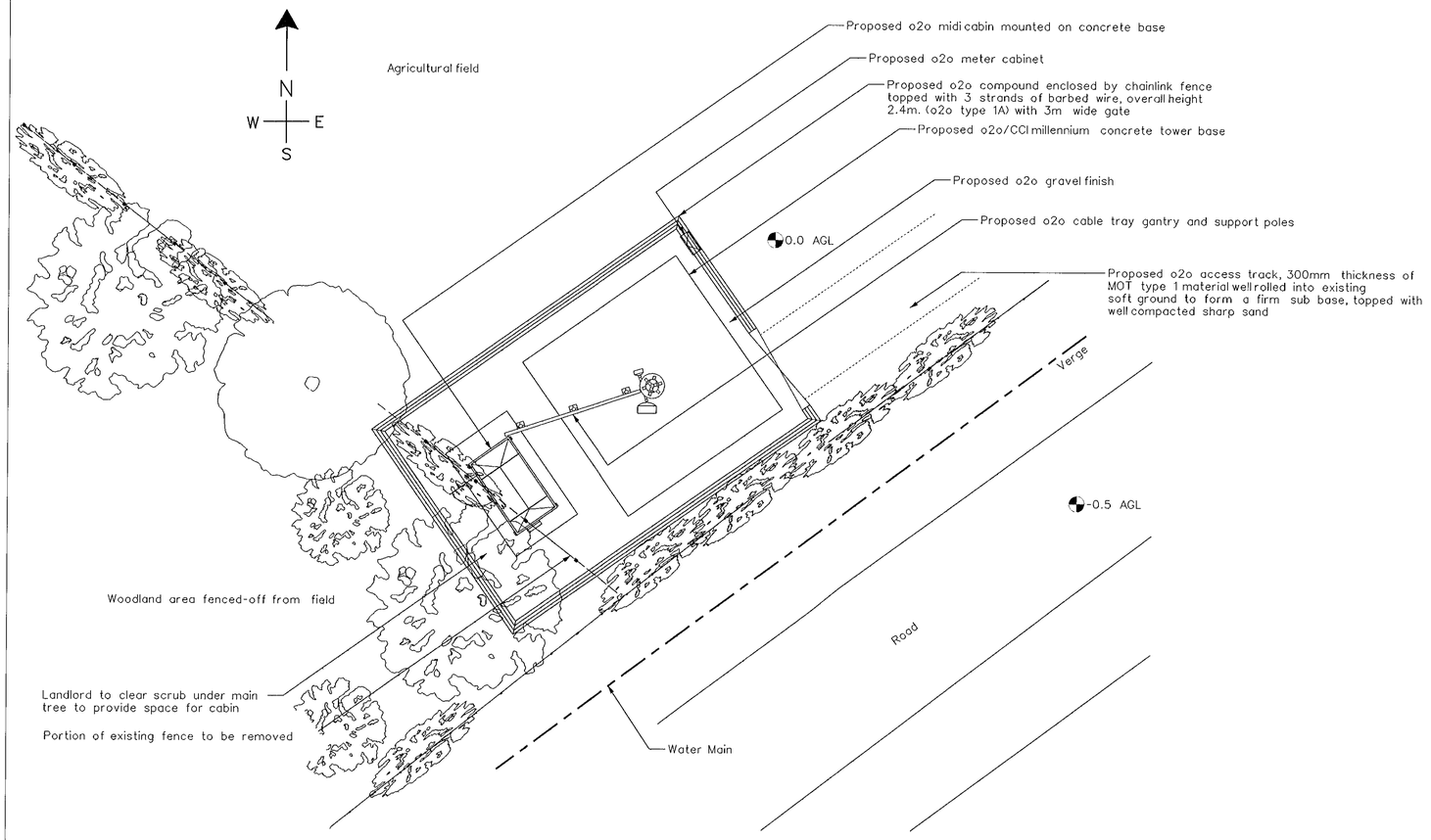

LAYOUT PLAN
Scale 1:100

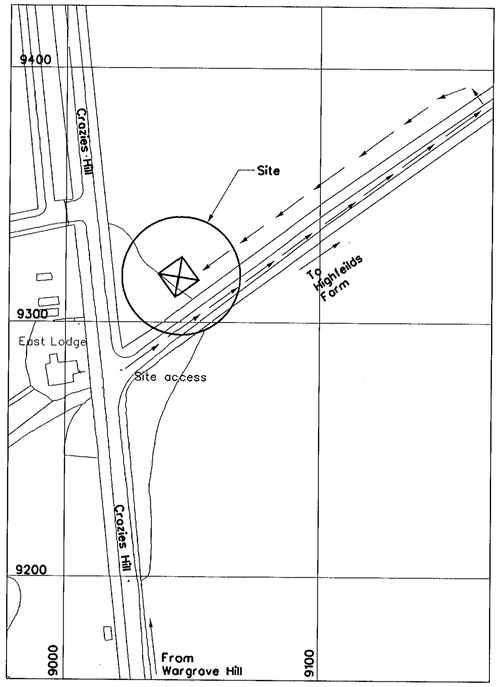

SITE LOCATION MAP
NATIONAL GRID REFERENCE 479040/179312
Scale 1:1250

CAD File Ref No MPC1445

NOTES

1.1. Do not scale

1.2. All dimensions are in mm unless otherwise specified.

1.3. Assume all site details are existing unless otherwise specified.

o2o EQUIPMENT

PROPOSED CABIN DETAILS :
o2o Ref : Portasilo Midi Cabin
Dimensions : 2760 x 1560 x 2900 high
Material : Steel
Colour : Grey

PROPOSED TOWER DETAILS :
o2o ref : 22.5/PS/CP/SU/3/M

PROPOSED ANTENNA DETAILS :
3 No. cross polar antennas with orientation of 340°, 110° & 230°

PROPOSED DISH DETAILS :

DISH ID	D1	D2	D3	D4
DISH SIZE	300	600	600	600
HEIGHT m AGL	22.5	22.5		
BEARING °EGN	341.04	180		
SITE LINK	203971			
SITE NAME	BBC HENLEY ON THAMES			

NOTE: ORIGINAL DRAWING SIZE A1

100mm ON ORIGINAL A1 DRAWING

SCALE 1:100 0 1 2 3 4 5 6 7 8 9 10m
SCALE 1:200 0 2 4 6 8 10 12 14 16 18 20m

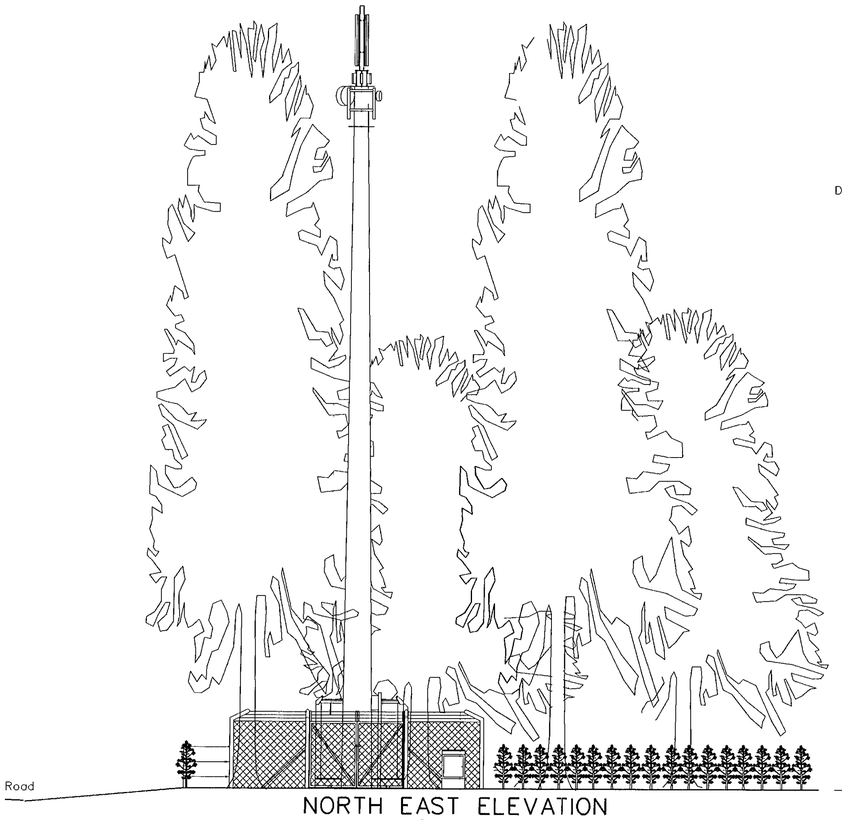

NORTH EAST ELEVATION
Scale 1:100

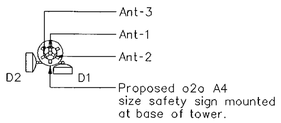

Note : Refer to notes for antenna and dish orientations

o2o EQUIPMENT ON TOWER
Scale 1:100

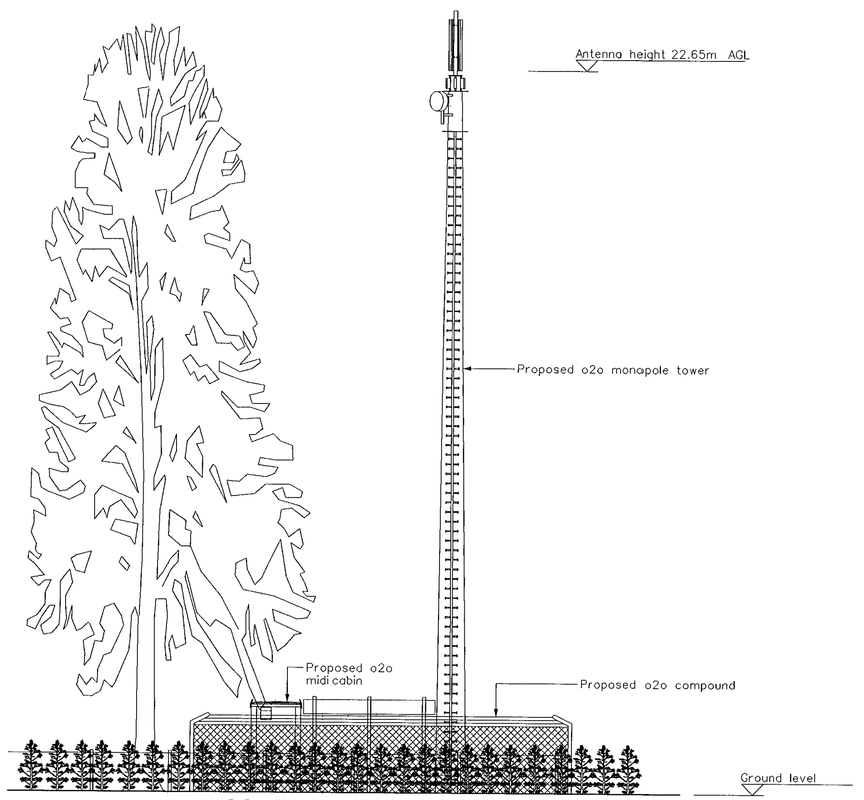

SOUTH EAST ELEVATION
Scale 1:100

Rev	Date	Amendments	Drawn By	Approved By
B	15/02/00	ROTATED COMPOUND	AP	
A	19/1/00	FIRST ISSUE	PJD	

A·P·T

HEAD OFFICE
Dolphin House
Albany Park
Camberley
Surrey GU15 2PL
Telephone: 01276 605000
01276 692095
Fax: 01276 683781
E-mail/Compuserve: 101454,770

NORTHERN
Station Yard
Station Road
Elworth
Sandbach
Cheshire
CW11 3JG
Telephone: 01270 758100
Fax: 01270 758101

NEWCASTLE UPON TYNE
Walker House
2 Granville Road
Jesmond
Newcastle upon Tyne
NE2 1TP
Telephone: 0191 2120786
Fax: 0191 2121073

MIDLANDS
The Barn, Farndon Grange
Marston Lane, East Farndon
Market Harborough
Leicestershire LE16 9SL
Telephone: 01858 439300
Fax: 01858 439301

NORTHERN IRELAND
Philip House
123 - 137 York Street
Belfast
BT15 AB
Telephone: 01232 236466
Fax: 01232 237391

SCOTLAND
Woodlands House
11 Ashley Street
Glasgow G3 6DR
Telephone: 0141 3312939
Fax: 0141 3312949

NETHERLANDS
Albany Partnership B.V.
Kruisweg 601,
P.O. Box 508
Hoofddorp 2132 NA
Netherlands
Fax: 31-20-6533481

BELGIUM
Kardinaal Mercierlei 44
2600 Berchem
Antwerpen
Belgium
Telephone: 32 1013 281120
Fax: 32 1013 239 26 40

Client
one2one
Client Ref: One 2 One Personal Communications Limited

Job Title
CELL - 98963
HIGHFIELD FARM-CORNER OF FIELD
WARGRAVE
READING, BERKS RG10 8PU

Drawing Title
APPROVED
SITE LAYOUT (PLANNING)

Scale				Date	
AS SHOWN					
Drawn by	Date	Checked by	Date	Approved by	Date
PJD	20/01/00				

Drawing No. 98045/98963/MPC01/01
Rev. B

14.APR.2000 * 1226