BLACKENWOOD WINDOWS LTD

31. JAN. 2000* 0477

31. JAN. 2000* 0477

White upvc frames glazed in clear DG units to British Standards.

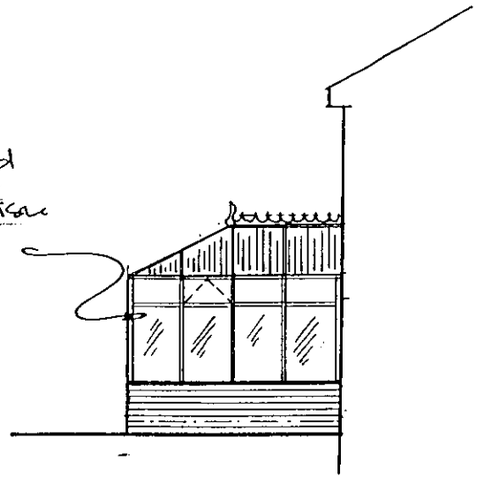

RIGHT ELEV.

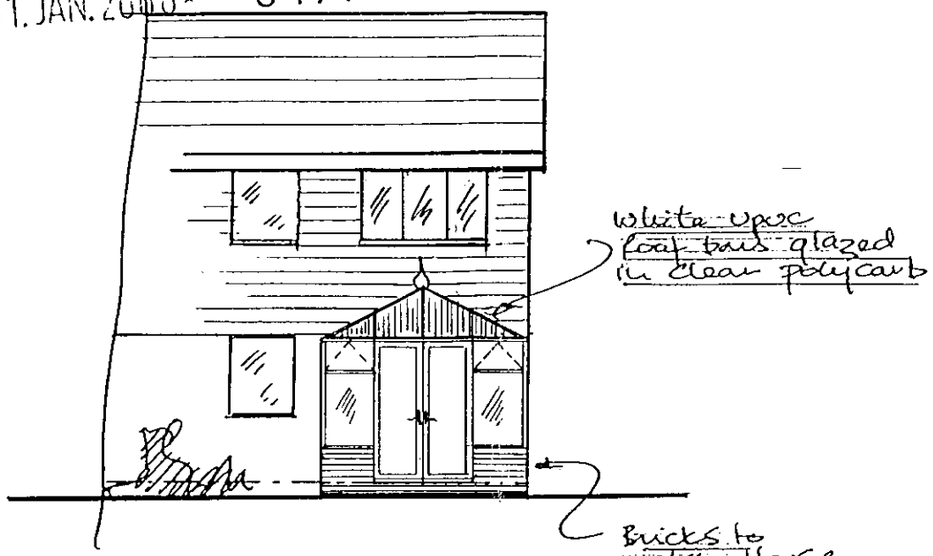

FRONT ELEVATION

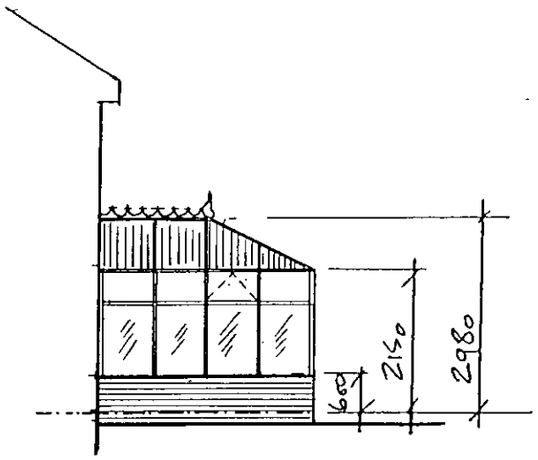

LEFT ELEV.

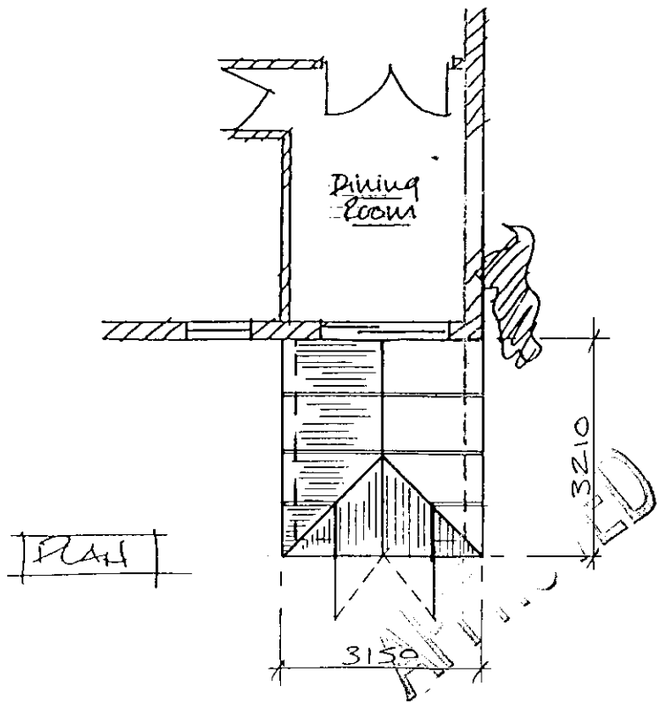

PLAN

Scale 1:100

PROPOSED CONSERVATORY TO 39, TREFOIL CLOSE, WOKINGHAM, BERKS